PHILIPS RADIOPLAYER

MODELS 146-A

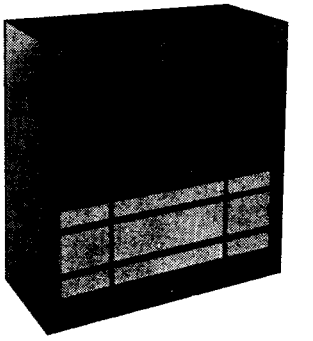

NOTE:—Model 146A varies from Model 146 in cabinet styling only.

SPECIFICATIONS

(Subject to alteration without notice)

Power Supply	200-250V, 40-60 c/s
Tuning Ranges	B/C band, 530-1620kc/s S/W band, 5.9-18.4Mc/s
Intermediate Frequency	455kc/s
Cabinet	Radiogram
Gramo. Unit	Type 2508

VALVE EQUIPMENT AND VOLTAGE ANALYSIS

Valve Function	Valve No.	Valve Type	Plate Volts	Screen Volts	Osc. P. Volts
Frequency Converter	V1	6AN7	245	50	80
I.F. Amplifier, A.V.C. and Demodulator	V2	6N8	245	70	—
Audio Amplifier	V3	6N8	85	—	—
Power Amplifier	V4	6M5	230	245	—
Rectifier	V5	EZ82	Cathode — L17 C.T., 287V.		
Dial Lamps	V11, 12, 13	6.3V. 0.32A. tubular screw			
Voltage across R23, –2.1V.; across R23 and R24, –6.6V.					

NOTE: These voltages are measured with an "1,000 ohms per volt" meter and may vary ± 10% from the figures quoted. They are measured from the socket points indicated to chassis or across the resistors listed. The receiver should be in a "no signal" condition.

ALIGNMENT.

The iron cores for the secondaries of the I.F. transformers are located in the top of the cans, those for the primaries are in the bottom of the cans. When trimming the I.F. circuits care should be taken not to screw the iron cores in too far otherwise undesired coupling may give rise to a false peak. A preliminary screwing to the outer edge of the former of all iron cores should be made. Then when trimming is being carried out the cores should not be screwed in beyond the first peak. Metallic tools should not be used for I.F. transformer trimming.

Broadcast band alignment frequencies are 1,420 kc/s, 3XY (oscillator and aerial trimmers), and 600 kc/s, 7ZL (slug padding); short wave band alignment frequencies are 18.4 Mc/s (tuning gang fully open, oscillator trimmer) and 17.8 Mc/s (aerial trimmer-rock gang). Before commencing alignment set the dial cursor to the stop mark at the extreme right-hand end on the bottom of the dial scale.

Do not attempt to adjust the iron cores of the aerial coils.

MAINS VOLTAGE ADJUSTMENT.

The power transformer is provided with two mains voltage tappings—200/230 volts and 240/250 volts—for adjustment to the supply voltage at the point of installation. The receiver is adjusted at the factory to the 240/250 volts tapping.

If it is necessary to make a primary tapping change, care should be taken to see that the gramo. unit leads are also changed.

TO REMOVE CHASSIS FROM CABINET.

Remove the power plug from the supply outlet socket. Remove the four control knobs (a firm pull is all that is necessary) and the cabinet back. Remove the gramo. unit plug, pick-up plug, speaker plug and warning lamp plug from their respective sockets. Remove the chassis bottom cover. Remove the two dial back plate securing screws. The chassis is held to the cabinet by means of retaining screws in the corners. Removal of these screws permits the chassis to be withdrawn.

Replacement of the chassis is a reversal of the above procedure.

DIAL CALIBRATION.

If it is required to correct dial calibrations for an equal error on all stations, provision is made for moving the cursor assembly with respect to the dial cord. Loosen the clamping screw, make the necessary adjustment to the cursor position and securely retighten the clamping screw.

Published by Philips Electrical Industries Pty. Limited

May, 1953 Sydney - Melbourne - Brisbane - Adelaide - Perth

MISCELLANEOUS COMPONENTS

No. on Dial Cord Layout Drawing	Description	Code No.
—	Assembly, cursor	CR.480.642
—	Assembly, dial back plate	CR.022.211
—	Assembly, lamp socket, 2x	CZ.367.900
—	Assembly, pulley spindle, 2x	CR.436.206
—	Assembly, pulley spindle	CR.436.210
—	Assembly, terminal, 2x	CZ.376.200
5	Assembly, tuning spindle	CR.371.328
—	Assembly, T/C—on/off switch	CZ.200.420
—	Assembly T/C clicker	CR.450.039
—	Assembly, W/C switch	CZ.200.227
—	Assembly, W/C clicker	CR.450.040
—	Badge, Philips	CR.531.408
—	Band, rubber (dial scale), 2x	CS.433.406
—	Bank, T/C switch	CZ.200.204
—	Bank, W/C switch	CZ.200.231
—	Bezel, warning lamp	CS.430.023
—	Bracket, gang mounting	CS.224.609
—	Bracket, tuning spindle	CS.224.607
—	Clamp, dial, 4x	CS.228.569
—	Clip, coil can mounting, 6x	CS.235.833

No. on Dial Cord Layout Drawing	Description	Code No.
—	Cloth, baffle	CE.081.86
4	Cord, dial drive	CS.361.831
1	Drum, dial	CS.360.007
—	Knob, control, 4x	CS.432.630
—	Nipple, slide rod adj.	CS.274.603
—	Plug, banana (warning lamp), 2x	CS.600.260
—	Plug, 2-pin. pol. (speaker and pick-up), 2x	CZ.365.108
3	Pulley, dial drive, 4x	CS.359.602
—	Ring, C (tuning spindle)	CS.281.802
6	Ring, dial cord	CS.281.807
—	Rod, dial slide	CS.382.213
—	Scale, dial	CS.412.361
—	Socket, 2-pin pol. (speaker and pick-up), 2x	CZ.370.107
—	Socket, warning lamp	CZ.370.106
—	Socket, valve, 5x	CZ.369.702
2	Spring, dial drum	CS.210.021
—	Switch, mains on/off	28.650.25
—	Washer, felt (knobs), 8x	CS.467.052

DIAL CORD LAYOUT

VIEW FROM REAR OF CHASSIS.

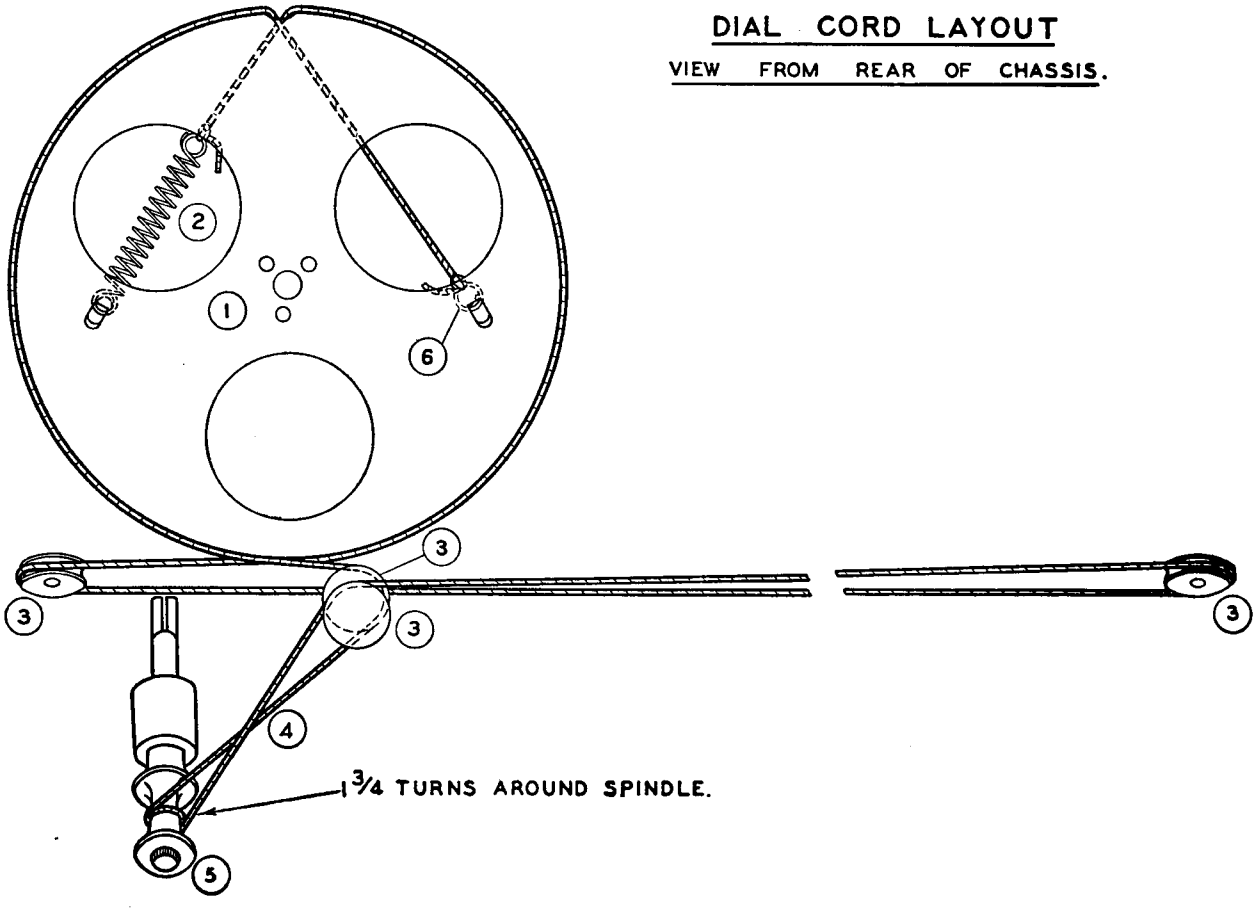

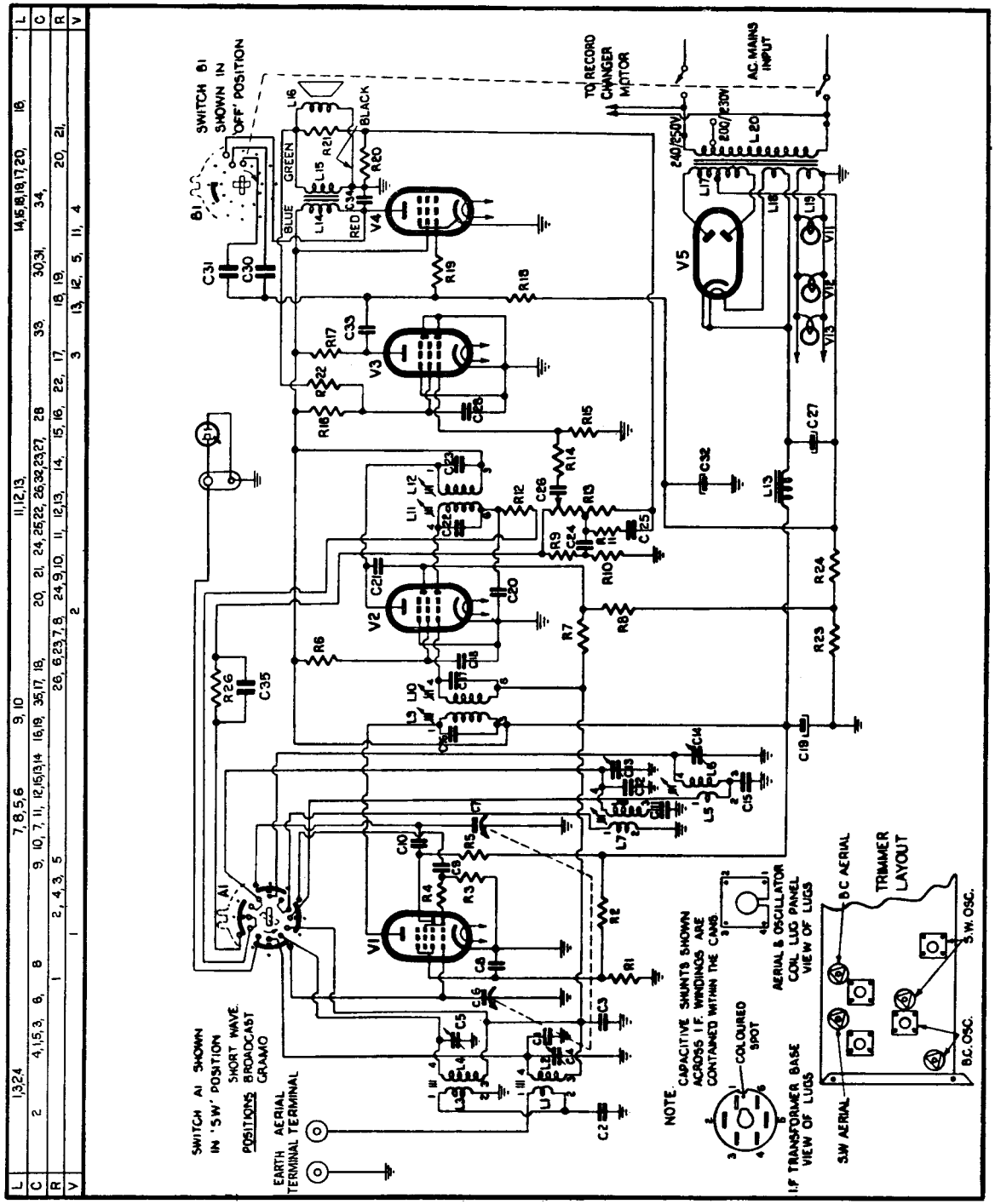
SWITCH B1 SHOWN IN 'OFF' POSITION
TO RECORD CHANGER MOTOR
A.C. MAINS INPUT
240/250V
200/230V
SWITCH A1 SHOWN IN 'SW' POSITION
POSITIONS
SHORT WAVE
BROADCAST
GRAM/O
EARTH
AERIAL TERMINAL
TERMINAL
CAPACITIVE SHUNTS SHOWN ACROSS I.F. WINDINGS ARE CONTAINED WITHIN THE CANS.
NOTE.
COLOURED SPOT
I.F. TRANSFORMER BASE VIEW OF LUGS
AERIAL & OSCILLATOR COIL LUG PANEL VIEW OF LUGS
TRIMMER LAYOUT
B.C. AERIAL
S.W. OSC.
B.C. OSC.
S.W. AERIAL
BLUE
GREEN
RED
BLACK

PARTS LISTS

CAPACITORS

No.	Description	Code No.
C1	10 pF mica	
C2–9–20–31	100 pF mica	
C3–25	0.05 mF 200V paper	
C4–5–13–14	30 pF air trimmer	CZ.113.700
C6–7	2 gang tuning	CZ.107.746
C8–18–34	0.01 mF 600V paper	
C10	50 pF mica 10%	
C11	475 pF mica 2%	CZ.066.119
C12	20 pF mica	
C15	0.008 mF mica 10%	
C16–17	Part of 1st I.F. transformer	
C19–27	24 mF 350V electrolytic	
C21–30	30 pF mica	
C22–23	Part of 2nd I.F. transformer	
C24–35	0.002 mF 600V paper	
C26–28–33	0.02 mF 400V paper	
C32	10 mF 40V electrolytic	

All tolerances are 20% except where otherwise stated.

RESISTORS

No.	Description	Code No.
R1–5	30,000 ohms 1W carbon	
R2	75,000 ohms 1W carbon	
R3–10–14–19	50,000 ohms ½W carbon	
R4	100 ohms ½W carbon	
R6	150,000 ohms 1W carbon	
R7–8	2 megohms ½W carbon	
R9–22	0.5 megohm ½W carbon	
R11	15,000 ohms ½W carbon	
R12	100,000 ohms ½W carbon	
R13	0.5 megohm tapped carbon potentiometer	CZ.029.137
R15	10 megohms 1W carbon	
R16	2 megohms 1W carbon	
R17	250,000 ohms 1W carbon	
R18	1 megohm ½W carbon	
R20	25 ohms ½W carbon	
R21	450 ohms ½W carbon	
R23	35 ohms W/W	
R24	75 ohms W/W	
R26	250,000 ohms ½W carbon	

All tolerances are 20% except where otherwise stated.

COILS

No.	Ohms	Description	Code No.
L1	1.3-1.7	S/W Aerial Coil (white spot)	CZ.323.006
L2	<0.5		
L3	25.5-34.5	B/C Aerial Coil (2 blue spots)	CZ.323.007
L4	1.7-2.3		
L5	<0.5	S/W Oscillator Coil (yellow spot)	CZ.330.601
L6	<0.5		
L7	1.0-1.4	B/C Oscillator Coil (red spot)	CZ.330.600
L8	2.9-3.9		
L9	11.5-12.5	1st I.F. Transformer	CZ.320.421 or CZ.320.426
L10	11.5-12.5		
L11	11.5-12.5	2nd I.F. Transformer	CZ.320.420 or CZ.320.425
L12	11.5-12.5		
L13	470-630	Filter Choke	CZ.341.003
L14	300-400	Speaker Transformer, 6,000 ohms	CZ.345.021
L15	<1.0		
L16	1.6-2.1	Speaker	CZ.161.309
L17	365-495	Power Transformer	CZ.344.080
L18	<0.5		
L19	<0.5		
L20	31-43		

IMPORTANT ! In ordering spare parts, quote CODE NUMBER of part and MODEL NUMBER of Receiver. In claiming free replacement under GUARANTEE, return defective part PROMPTLY and quote MODEL and SERIAL NUMBER of Receiver and DATE OF PURCHASE.