PHILIPS RADIOPLAYER

MODEL 145

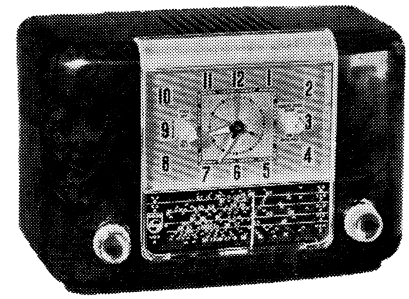

SPECIFICATIONS

(Subject to alteration without notice)

Power Supply	200-250V, 50 c/s
Tuning Range	530 - 1620 kc/s
Intermediate Frequency	455 kc/s
Cabinet	Bakelite mantel
Timer Unit	Telechron C98

VALVE EQUIPMENT AND VOLTAGE ANALYSIS

Valve Function	Valve No.	Valve Type	Plate Volts	Screen Volts	Osc. P. Volts
Frequency Converter	V1	6AN7	210	55	55
I.F. Amplifier, Demodulator and A.V.C.	V2	6N8	210	55	—
Power Amplifier	V3	6M5	208	210	—
Rectifier	V4	6V4	V4 Cathode — L13 C.T., 230V		
Dial Lamp	V11	6.3V, 0.32A tubular screw			
	Voltage across R13, –6.7V				

NOTE: These voltages are measured with an "1,000 ohms per volt" meter and may vary ± 10% from the figures quoted. They are measured from the socket points indicated to chassis or across the resistor listed. The receiver should be in a "no signal" condition.

TO REMOVE CHASSIS FROM CABINET.

Remove mains plug from wall outlet socket. Remove the two radio control knobs (a firm pull is all that is required), the cabinet back and heat deflecting shield. Unsolder the connections for the speaker voice coil from the lugs near the output transformer. Unwind the dial cursor from the dial drive cord. Remove the timer unit plug from its socket on the radio chassis. Unscrew and remove the two rear chassis securing screws and brackets. The chassis may now be withdrawn from the cabinet, but care should be exercised to hold the timer unit time set control knob to one side to clear the 2nd I.F. transformer.

With the removal of the timer unit plug from its socket, it is not possible to get power to the chassis until pins 2 and 4 of the socket are bridged (refer to circuit diagram).

Replacement of the chassis is a reversal of the above procedure with care to see that the time set control knob does not foul the chassis.

REMOVAL OF TIMER UNIT FROM CABINET.

For this operation, it is necessary to remove the chassis from the cabinet (see "To Remove Chassis from Cabinet"). After the chassis has been removed, proceed as follows.

From inside the cabinet remove the light shield and the two self-tapping screws which secure the dial scale and clock overlay. Remove the two timer unit knobs and lift off the dial scale and clock overlay from the cabinet. Remove the clock hands. Unfasten the two lugs which retain the clock face from inside the cabinet and lift off. Remove the four screws which mount the timer and withdraw it through the front of the cabinet.

Replacement of the timer unit is a reversal of the above procedure, but reference should be made to "Replacement of Timer Unit Hands" at the appropriate time.

TO REMOVE SPEAKER FROM CABINET.

Remove mains plug from wall outlet socket, cabinet back and heat deflecting shield from cabinet, and withdraw type 6M5 valve from its socket. Unsolder the connections for the voice coil from the lugs near the output transformer. Remove the two screws at the rear of the speaker and slide it out of the cabinet.

MAINS VOLTAGE ADJUSTMENT.

The power transformer is provided with two primary winding tappings—200/230 volts and 240/250 volts—for adjustment of the receiver to the supply voltage at the point of installation. The receiver is adjusted at the factory to the 240/250 volts tapping.

REPLACEMENT OF TIMER UNIT HANDS.

If the timer unit has been removed for any reason the following procedure is required for replacing the hands. Power should not be applied.

Push on both timer knobs temporarily. Pull out the right-hand knob and turn it to the off position. The hand setting knob at the rear should be rotated until the switch just operates. This is indicated by the movement of the small bakelite piece into the body of the switch.

This operation should be exact. If the knob is turned too quickly, the correct point will be passed over. To correct this, push the right-hand knob in and pull out again, turn the hand setting knob anti-clockwise about a turn, then turn it clockwise slowly until the switch just operates. (Contd. on Page Three)

Published by Philips Electrical Industries Pty. Ltd.
Sydney - Melbourne - Brisbane - Adelaide - Perth

December, 1954

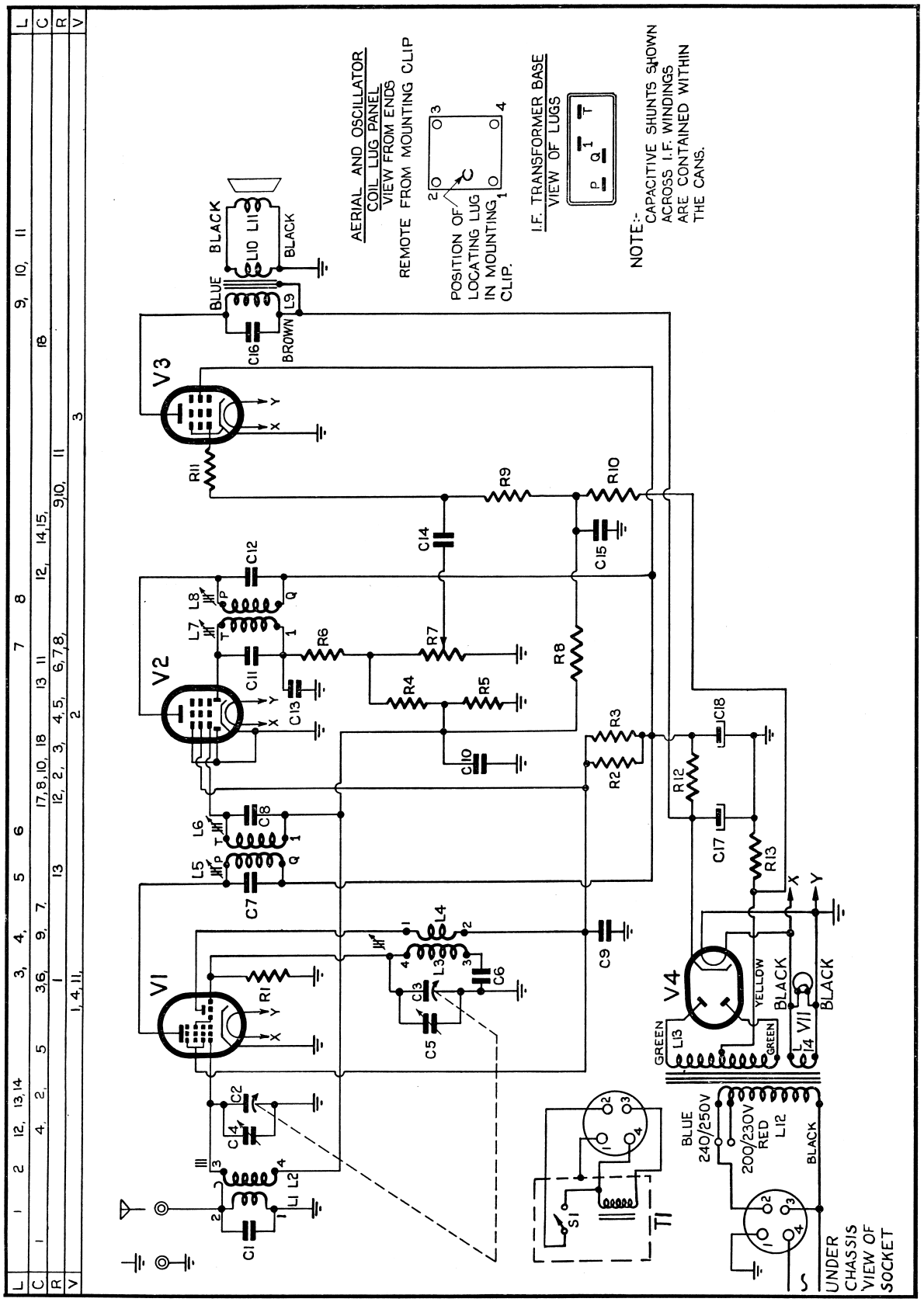
AERIAL AND OSCILLATOR COIL LUG PANEL
VIEW FROM ENDS
REMOTE FROM MOUNTING CLIP
POSITION OF LOCATING LUG IN MOUNTING CLIP.
I.F. TRANSFORMER BASE
VIEW OF LUGS
NOTE:- CAPACITIVE SHUNTS SHOWN ACROSS I.F. WINDINGS ARE CONTAINED WITHIN THE CANS.
UNDER CHASSIS VIEW OF SOCKET
V1
V2
V3
V4
BLACK
BLUE
BROWN
GREEN
YELLOW
RED
240/250V
200/230V
L10 L11
L9
C16
R11
R9
R10
C14
C15
C12
L8
L7
R6
R7
R8
C11
C13
R4
R5
C10
R3
R2
C18
R12
C17
R13
L6
C8
L5
C7
L4
L3
C3
C5
C6
C9
R1
C2
C4
L1 L2
C1
S1
T1
L13
L14 V11
L12

PARTS LISTS

CAPACITORS

No.	Description	Code No.
C1, 13	100 pF mica	
C2, 3, 4, 5	2 gang tuning with trimmers	CZ.107.749
C6	330 pF mica 2%	CZ.066.124
C7, 8, 11, 12	Part of I.F. transformers	
C9	0.05 mF 400V paper	
C10, 14	0.05 mF 200V paper	
C15	0.25 mF 200V paper	
C16	0.02 mF 600V paper	
C17, 18	24 mF 350V electrolytic	

All tolerances are 20% unless otherwise specified.

RESISTORS

No.	Description	Code No.
R1	22,000 ohms ½W carbon	
R2, 3	47,000 ohms 1W carbon	
R4, 8	2.2 megohms ½W carbon	
R5	560,000 ohms ½W carbon	
R6, 11	47,000 ohms ½W carbon	
R7	0.5 megohm carbon potentiometer	CZ.030.503
R9, 10	470,000 ohms ½W carbon	
R12	1,000 ohms 1W carbon	
R13	160 ohms 1W W/W 10%	

All tolerances are 20% unless otherwise specified.

COILS

No.	Ohms	Description	Code No.
L1	24.0-32.5	Aerial coil	CZ.323.019
L2	2.0-3.0		
L3	1.0-2.0	Oscillator coil	CZ.330.606
L4	3.5-5.0		
L5	11.5-15.5	1st I.F. transformer	A3.124.25
L6	11.5-15.5		
L7	11.5-15.5	2nd I.F. transformer	A3.124.25
L8	11.5-15.5		
L9		Speaker transformer, 7,000 ohms	Type XA2
L10			
L11		Speaker	Type BH2
L12	55-75	Power transformer	CZ.344.084
L13	630-850		
L14	<0.5		

IMPORTANT ! In ordering spare parts, quote CODE NUMBER of part and MODEL NUMBER of Receiver. In claiming free replacement under GUARANTEE, return defective part PROMPTLY and quote MODEL and SERIAL NUMBER of Receiver and DATE OF PURCHASE.

(Continued from Page One)

Replace the alarm hand (red), hour hand and minute hand in that order, setting each one exactly at 12. Ensure that each hand is pressed down firmly and that all are clear of one another and the clock dial scale.

Check these operations by setting the alarm hand to any other hour by using the left-hand knob. Push in the right-hand knob and pull it out again. Turn the hands by means of the hand setting knob, doing this very slowly as the set time is approached, and check that the switch operates within 5 minutes either side of this time.

Replace the sweep second hand. When replacing dial and overlay, ensure that it clears sweep hand.

ALIGNMENT.

By using short length tools, alignment can be undertaken with the chassis in the cabinet.

I.F. transformer adjustments are:—

2nd I.F.T.—
Secondary — front screw
Primary — rear screw

1st I.F.T.—
Secondary — screw nearer 6N8
Primary — screw nearer 6AN7

Before commencing R.F. alignment, fully close the tuning capacitor and adjust the dial cursor to the stop point. This is not marked on the dial scale, but the position is one cursor width to the left from the left-hand vertical portion of the letter "N," in "N.S.W." at the right-hand end of the dial scale. Use an 100 pF capacitor as dummy aerial for R.F. alignment. Trimming adjustments are: oscillator trimmer (1,420 kc/s, 3XY) front of tuning capacitor, aerial trimmer (1,420 kc/s) rear of tuning capacitor, padding (600 kc/s, 7ZL) iron core in oscillator coil.

In the event of replacement of the oscillator coil it is advisable to make a preliminary peaking of the iron core at 600 kc/s before commencing alignment.

No attempt should be made to adjust the aerial coil iron core.

DIAL CALIBRATION ADJUSTMENT.

If dial calibrations are incorrect by an equal amount over the length of the scale, the condition can be corrected by sliding the cursor on the dial cord to the correct position.

MISCELLANEOUS COMPONENTS

No. on Dial Cord Layout Drawing	Description	Code No.
7	Assembly, cursor	CR.480.658
—	Assembly, lampholder	CZ.367.920
—	Bracket, cabinet back mtg, 4x	CS.244.602
—	Cabinet, burgundy	CR.570.549
—	Cabinet, green	CR.570.551
—	Cabinet, ivory	CR.570.548
—	Cabinet, walnut	CR.570.550
—	Clip, spring (I.F.T. mtg.), 2x	A3.652.58
4	Cord, dial	37" of cord required
1	Drum, dial	CS.359.806
—	Knob, radio, 2x	CR.523.711

No. on Dial Cord Layout Drawing	Description	Code No.
—	Knob, clock, 2x	CS.432.660
5	Pulley, dial	CS.359.602
—	Ring, C (tuning spindle), 2x	CS.281.802
6	Ring, dial cord	CS.281.807
—	Scale, clock dial	CS.412.384
—	Scale, radio dial and clock overlay	CS.412.381
—	Screw, speaker mtg., $\frac{1}{8}$", 2x	CS.258.851
—	Speed fix (knobs), 2x	CS.281.832
—	Spindle, potentiometer	CS.351.354
3	Spindle, tuning	CS.351.353
2	Spring, dial drum	CS.210.034

DIAL CORD LAYOUT

VIEW FROM FRONT OF CHASSIS