ALPINE SERVICE MANUAL

Digital FM/AM Tuner

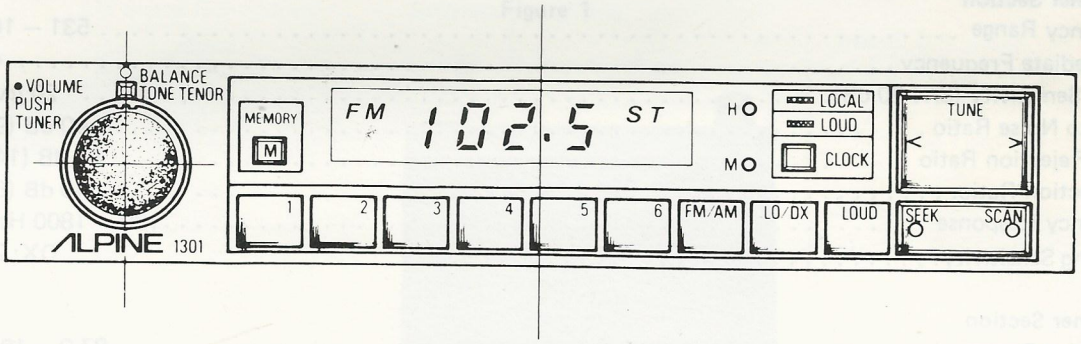

1301

Contents

Specifications 2
Parts Locations and Disassembly Instructions . . . . . 3 to 4
Adjustment Procedures . . . . . 5 to 6
Adjustment Locations 7
FM Front End Schematic Diagram 7
Block Diagram 8
Parts Layout on P.C. Boards . . . . . 8 to 12
Wiring Diagram . . . . . 13 to 14
Schematic Diagram . . . . . 15 to 16
Electrical Parts List . . . . . 17 to 22
Packing Method View 23
Packing Assembly Parts List 24
Exploded View (Cabinet) . . . . . 25 to 26
Cabinet Assembly Parts List 27
Semi-Conductor Lead Identifications . . . . . 28 to 32

Specifications

AM Tuner Section

Frequency Range . . . . . 531 – 1602 KHz
Intermediate Frequency . . . . . 450 KHz
Usable Sensitivity (S/N 20 dB) . . . . . 20 μV (35 dB)
Signal to Noise Ratio . . . . . 40 dB (999 KHz)
Image Rejection Ratio . . . . . 50 dB (1404 KHz)
IF Rejection Ratio . . . . . 40 dB (603 KHz)
Frequency Response . . . . . 100 – 1800 Hz (–6 dB)
Scanning Sensitivity . . . . . DX; 22 ± 8 dB

FM Tuner Section

Frequency Range . . . . . 87.9 – 107.9 MHz
Intermediate Frequency . . . . . 10.7 MHz
Usable Sensitivity (S/N 30 dB) . . . . . 10 μV
Image Rejection Ratio . . . . . 35 dB (106 MHz)
IF Rejection Ratio . . . . . 60 dB (90 MHz)
Signal to Noise Ratio . . . . . 45 dB (98 MHz)
Frequency Response . . . . . 100 – 8000 Hz (–6 dB)
Stereo Separation . . . . . 25 dB (98 MHz)
Scanning Sensitivity . . . . . DX: 18 ± 8 dB

General

Power Requirement . . . . . DC 13.2V (Operating voltage range 11 – 15V)
Semi-Conductors . . . . . 11 IC's, 27 Transistors, 3 FETs, 38 Diodes, 8 Zener Diodes and 3 Varicap Diodes
Dimensions . . . . . 160(W) x 30(H) x 125(D) mm
Weight . . . . . 0.8 kg

Parts Locations and Disassembly Instructions

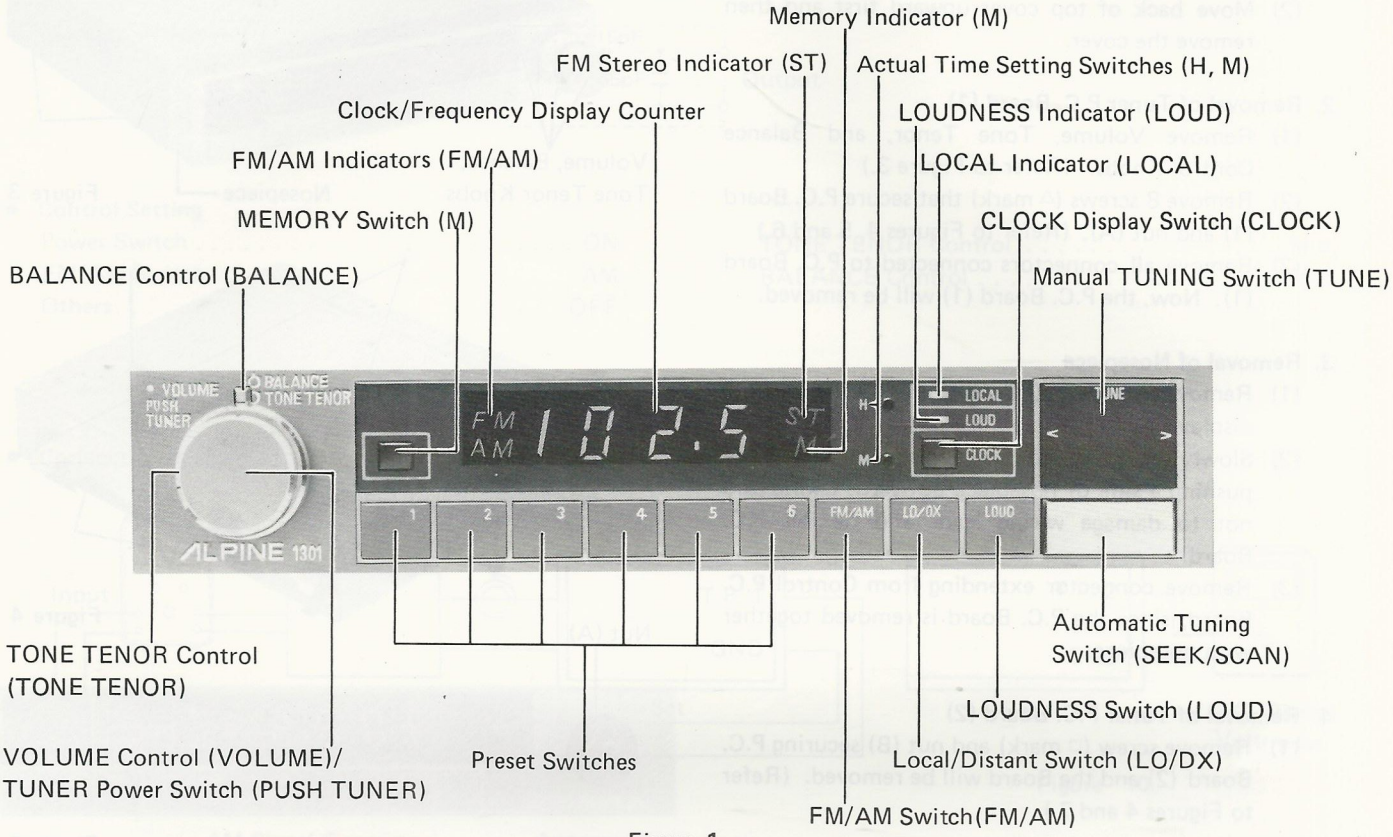

Figure 1

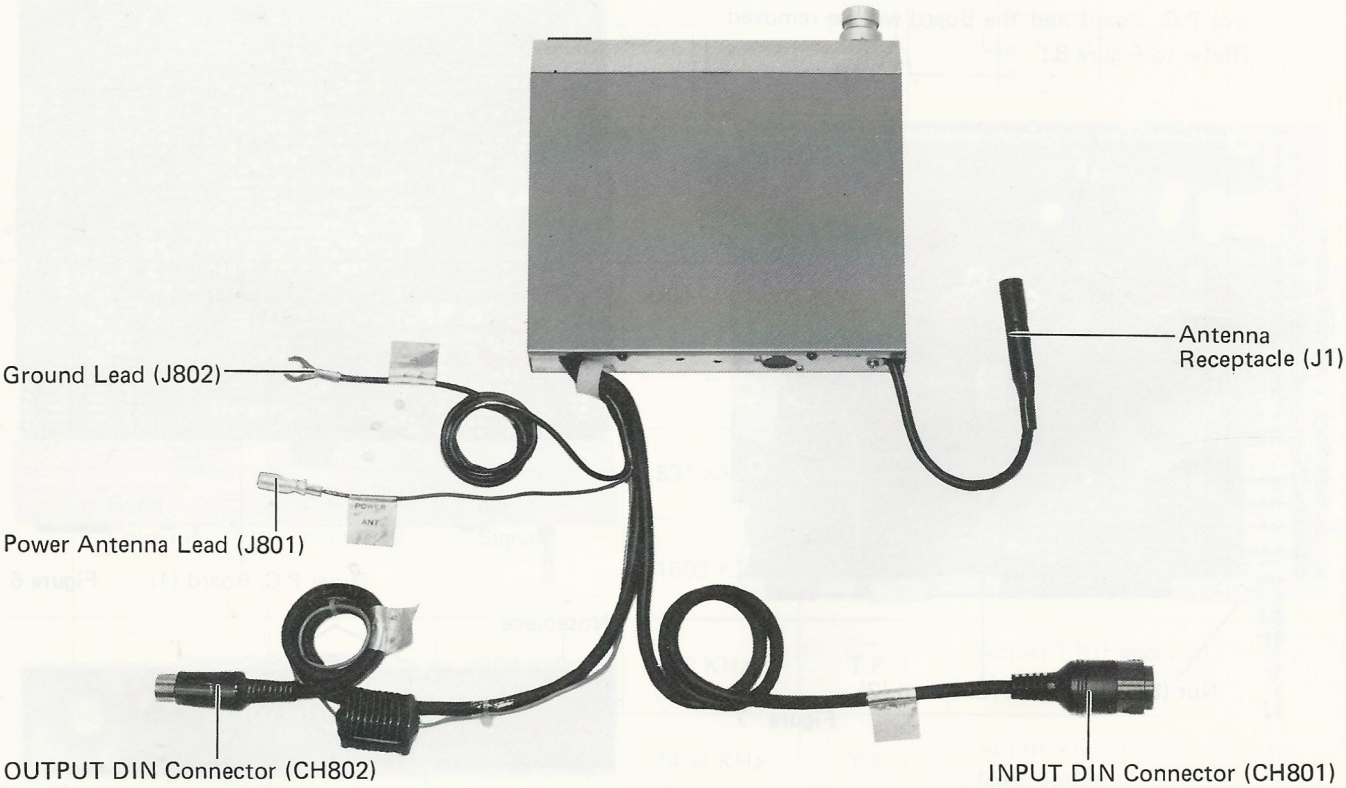

Figure 2

1. Removal of Top Cover

(1) Remove 6 screws (○ mark) securing top cover. (Refer to Figures 3 and 4.)

(2) Move back of top cover upward first and then remove the cover.

2. Removal of Tuner P.C. Board (1)

(1) Remove Volume, Tone Tenor, and Balance Control Knobs. (Refer to Figure 3.)

(2) Remove 8 screws (△ mark) that secure P.C. Board (1) and nut (A). (Refer to Figures 4, 5 and 6.)

(3) Remove all connectors connected to P.C. Board (1). Now, the P.C. Board (1) will be removed.

3. Removal of Nosepiece

(1) Remove flexible P.C. Board extending from LED display unit.

(2) Slowly pull out the nosepiece forward while pushing a side of nosepiece outward, taking care not to damage wiring leads and flexible P.C. Board.

(3) Remove connector extending from Control P.C. Board, since the P.C. Board is removed together with nosepiece.

4. Removal of Tuner P.C. Board (2)

(1) Remove screw (□ mark) and nut (B) securing P.C. Board (2) and the Board will be removed. (Refer to Figures 4 and 7.)

5. Removal of Control P.C. Board

(1) Remove two screws (※ mark) securing the Control P.C. Board and the Board will be removed. (Refer to Figure 8.)

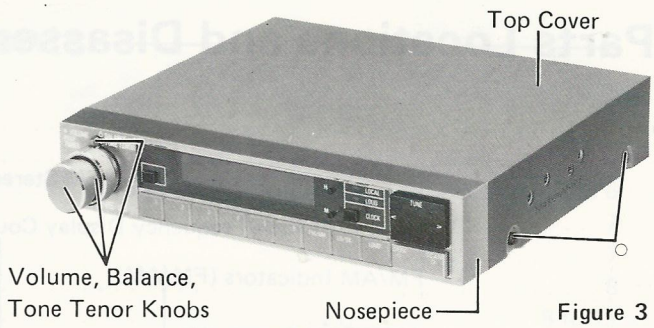

Figure 3

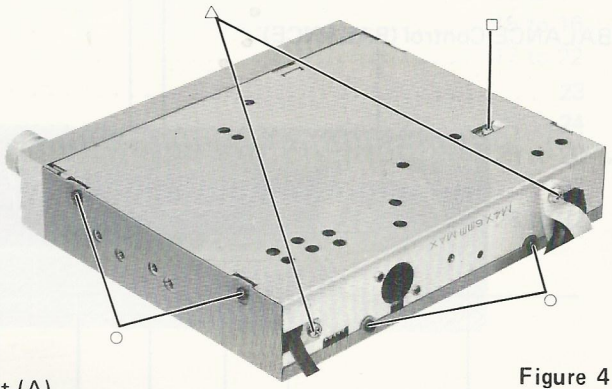

Figure 4

Figure 5

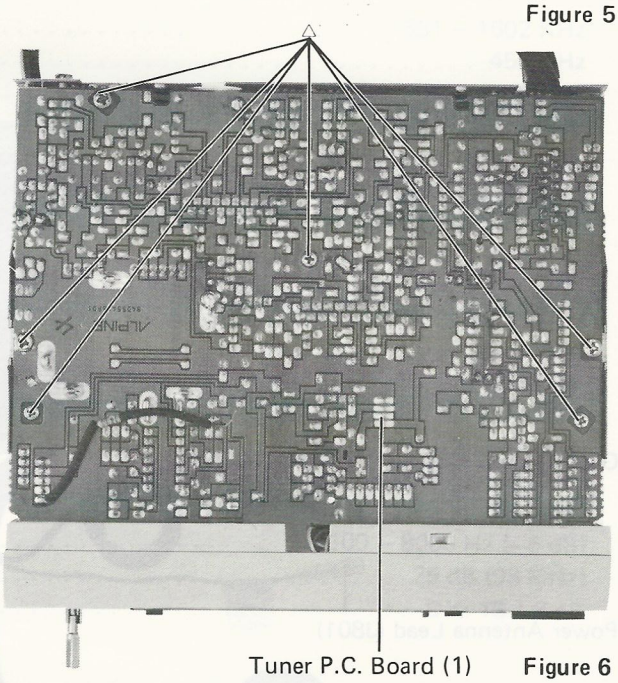

Figure 6

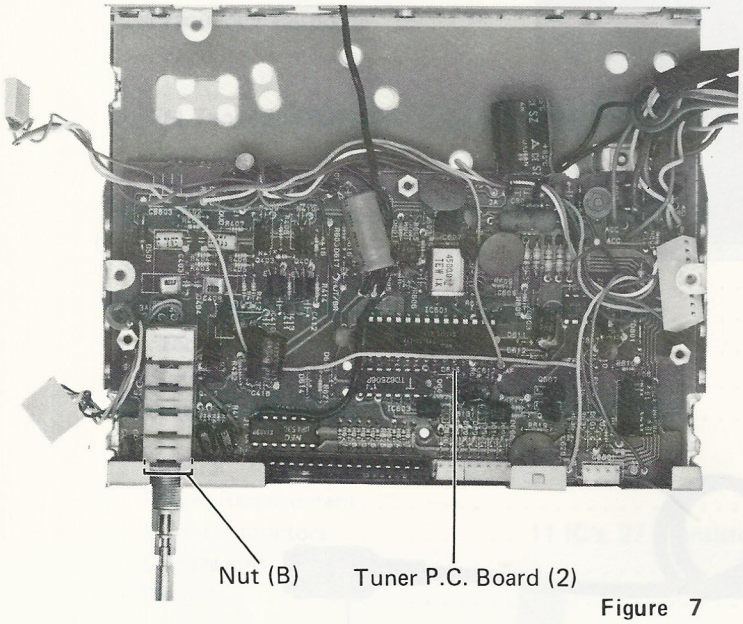

Figure 7

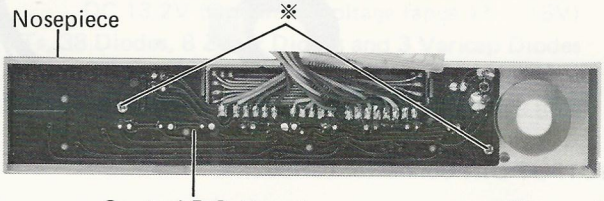

Figure 8

Adjustment Procedures

1. AM Tuner

- **Dummy Antenna**

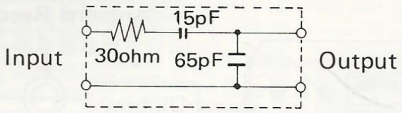

- **Control Setting**

Power Switch . . . . . ON
FM/AM Switch . . . . . AM
Others. . . . . OFF

TONE TENOR Control . . . . . Mid.
BALANCE Control . . . . . Mid.

- **Connection**

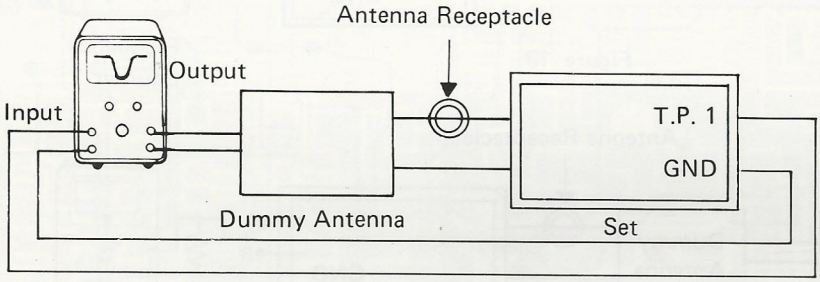

Figure 9

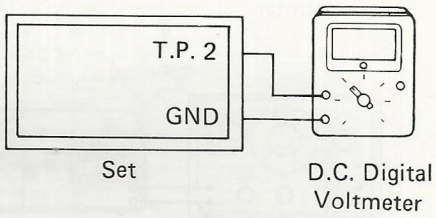

Figure 10

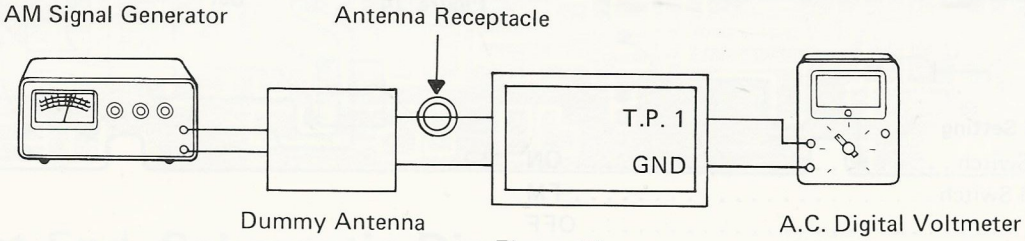

Figure 11

- **Adjustment Procedures**

Step	Description	Connection	Input Signal	Dial Setting	Test Point	Remarks
1	IF Adjustment	Figure 9	450 KHz (Sweep)	–	T.P. 1	Adjust T104 and T105 for Max. and symmetrical response.
2	Band Covering	Figure 10	No Signal	531 KHz	T.P. 2	Adjust T103 to obtain 1.25V output.
				1602 KHz	T.P. 2	Adjust VC103 to obtain 7.5V output.
3	Tracking	Figure 11	603 KHz	603 KHz	T.P. 1	Adjust T101 and T102 for Max. output.
			1404 KHz	1404 KHz	T.P. 1	Adjust VC101 and VC102 for Max. output.

2. FM Tuner

- **Connection**

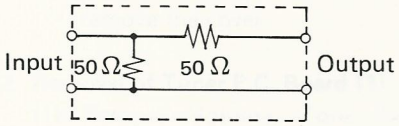

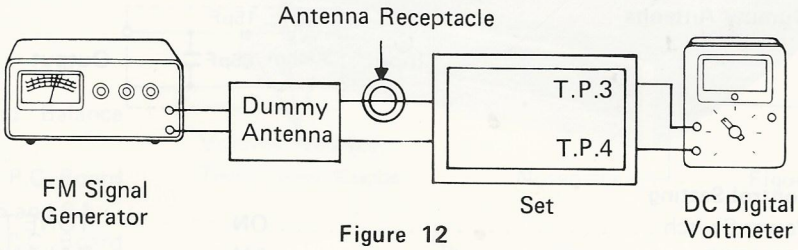

Figure 12

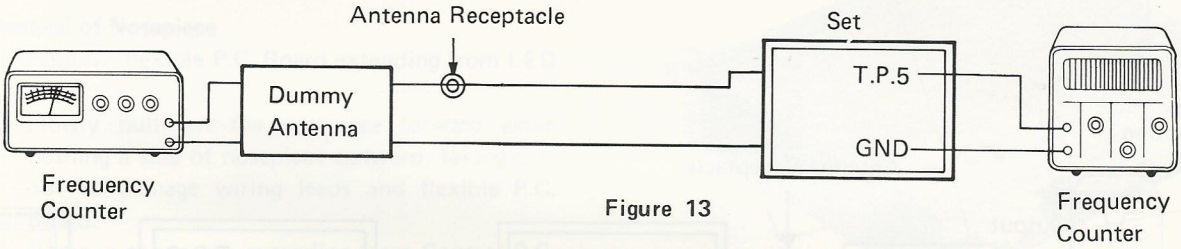

Figure 13

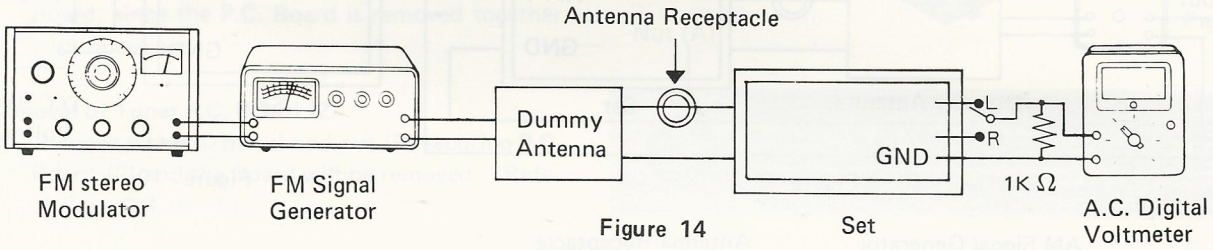

Figure 14

- **Control Setting**

Power Switch . . . . . ON
FM/AM Switch . . . . . FM
Others. . . . . OFF
TONE TENOR Control . . . . . Max.
BALANCE Control . . . . . Mid.

- **Adjustment Procedures**

Step	Description	Connection	Input Signal	Dial Setting	Test Point	Remarks
1	IF Adjustment	Figure 12	98 MHz 100 μV	98 MHz	T.P. 3, 4	Adjust T1 to obtain 0V between T.P. 3 and T.P. 4.
2	Free Running Frequency Adjustment	Figure 13	98 MHz 100 μV No mod.	98 MHz	T.P. 5	Adjust VR2 to obtain frequency reading of 19 KHz.
3	Separation Adjustment	Figure 14	98 MHz, 1000 μV stereo Mod. R(L) signal	98 MHz	LINE OUT	Adjust VR1 to obtain minimum crosstalk (maximum separation).

Adjustment Locations

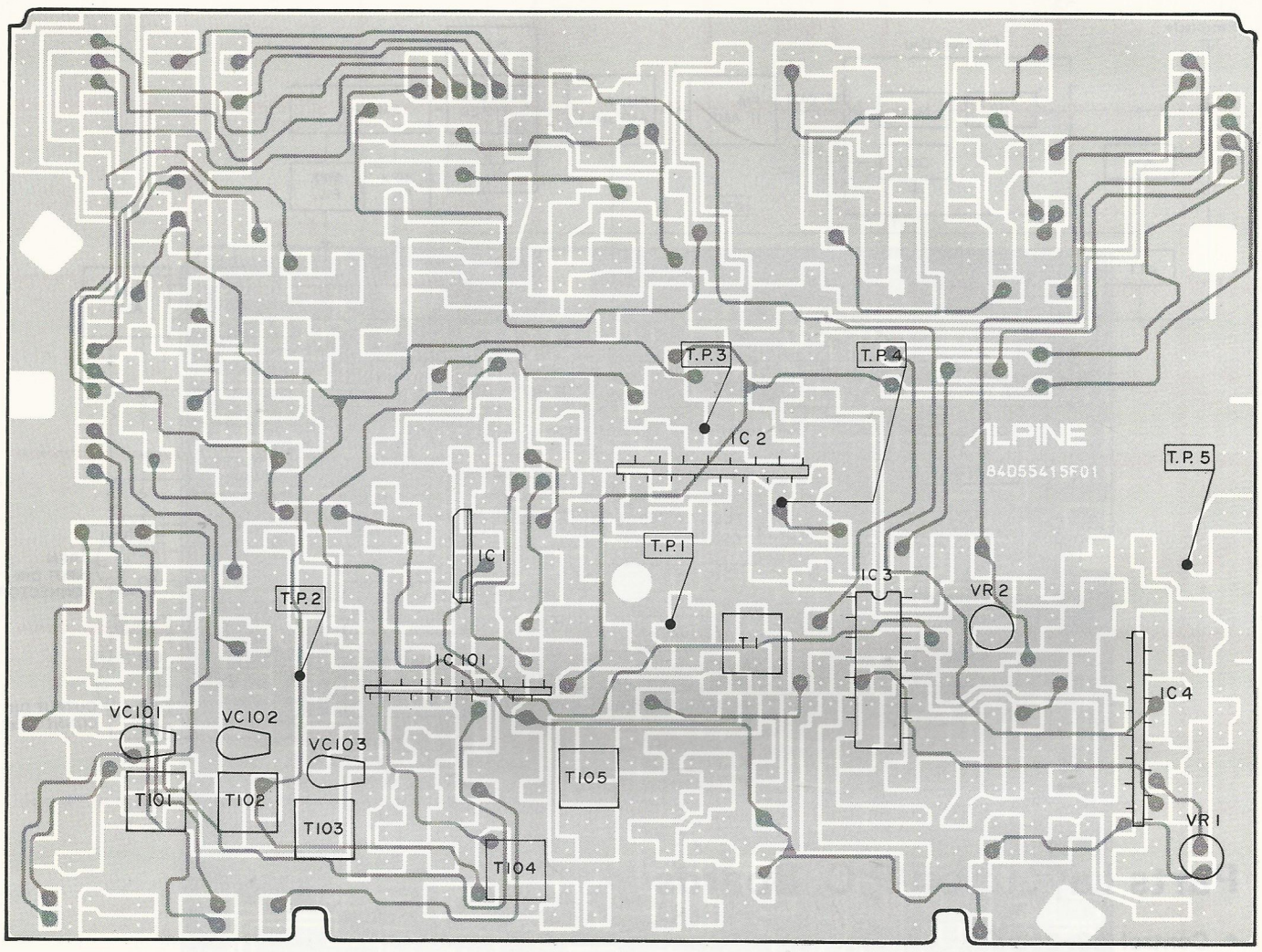

FM Front End Schematic Diagram

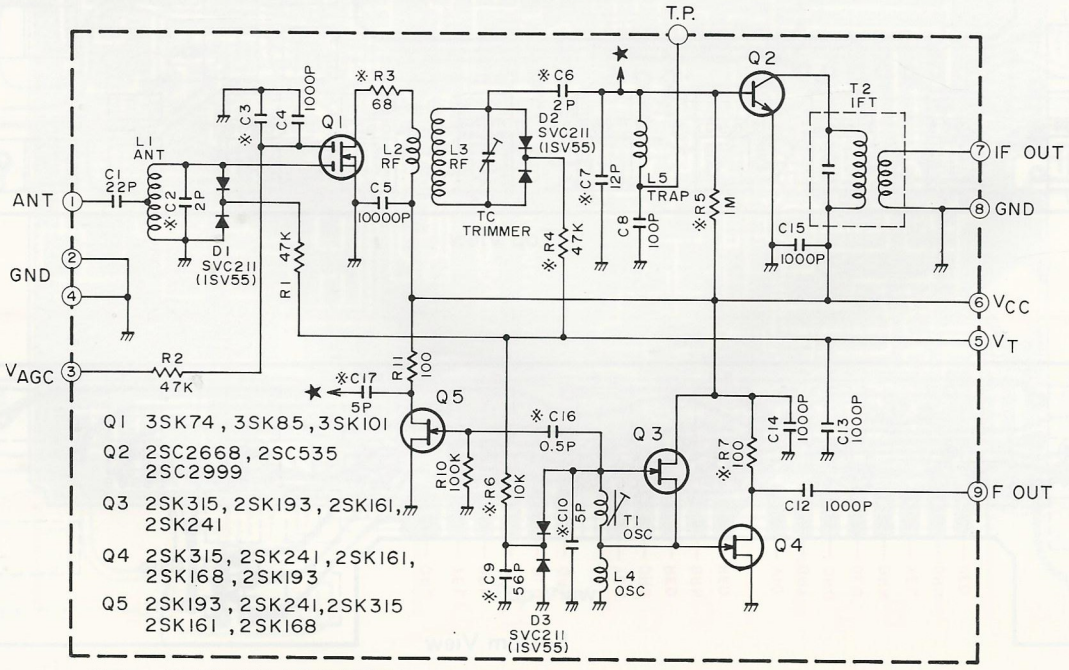

Note: ※ TO BE ADJUSTED.

Block Diagram

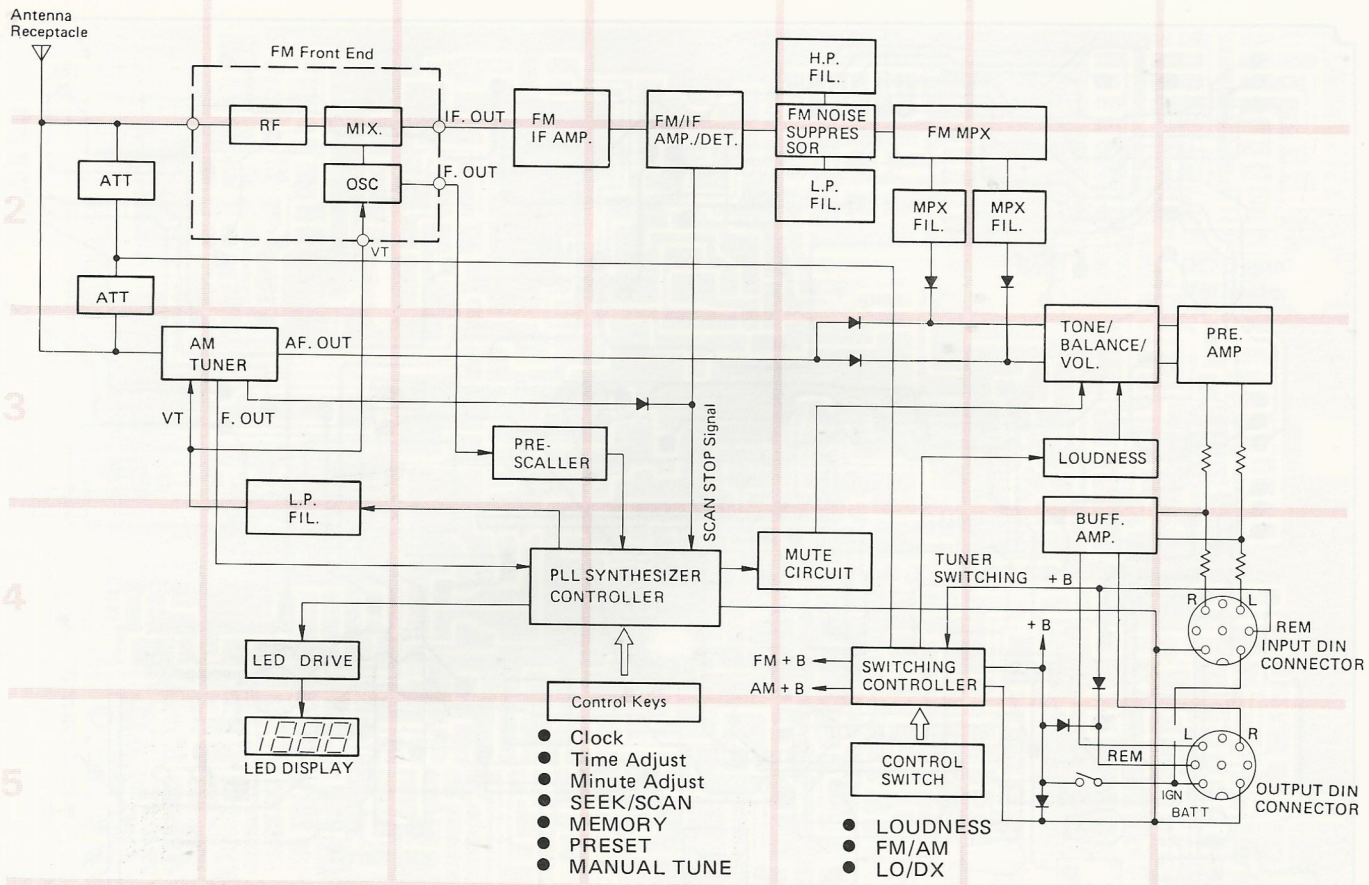

Parts Layout on P.C. Boards

- **Control P.C. Board**

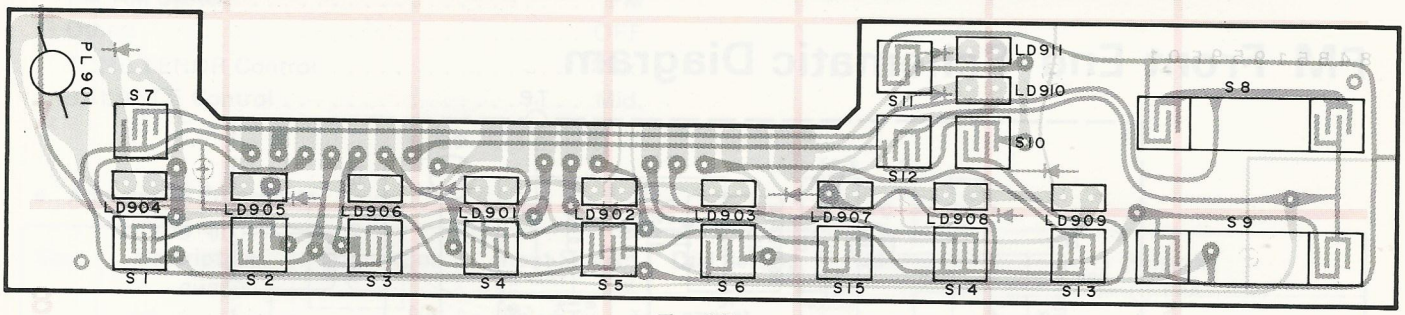

Top View

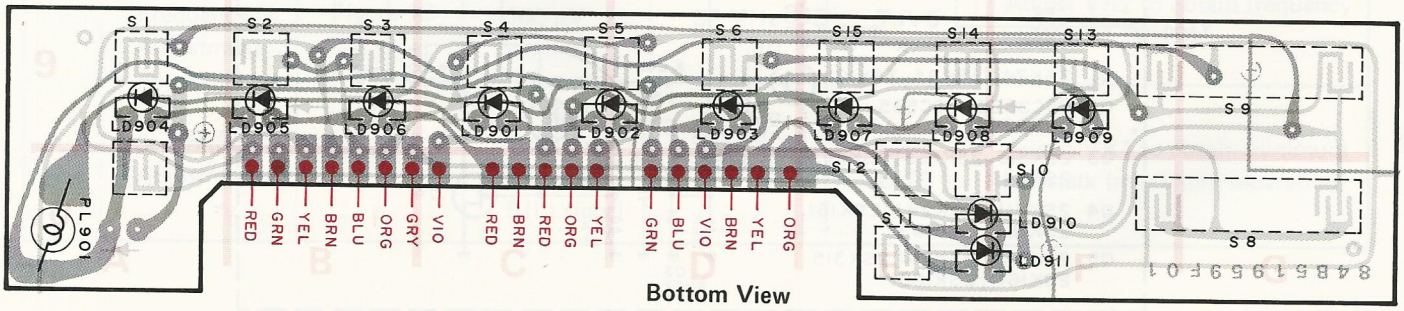

Bottom View

● **Tuner P.C. Board (2)**

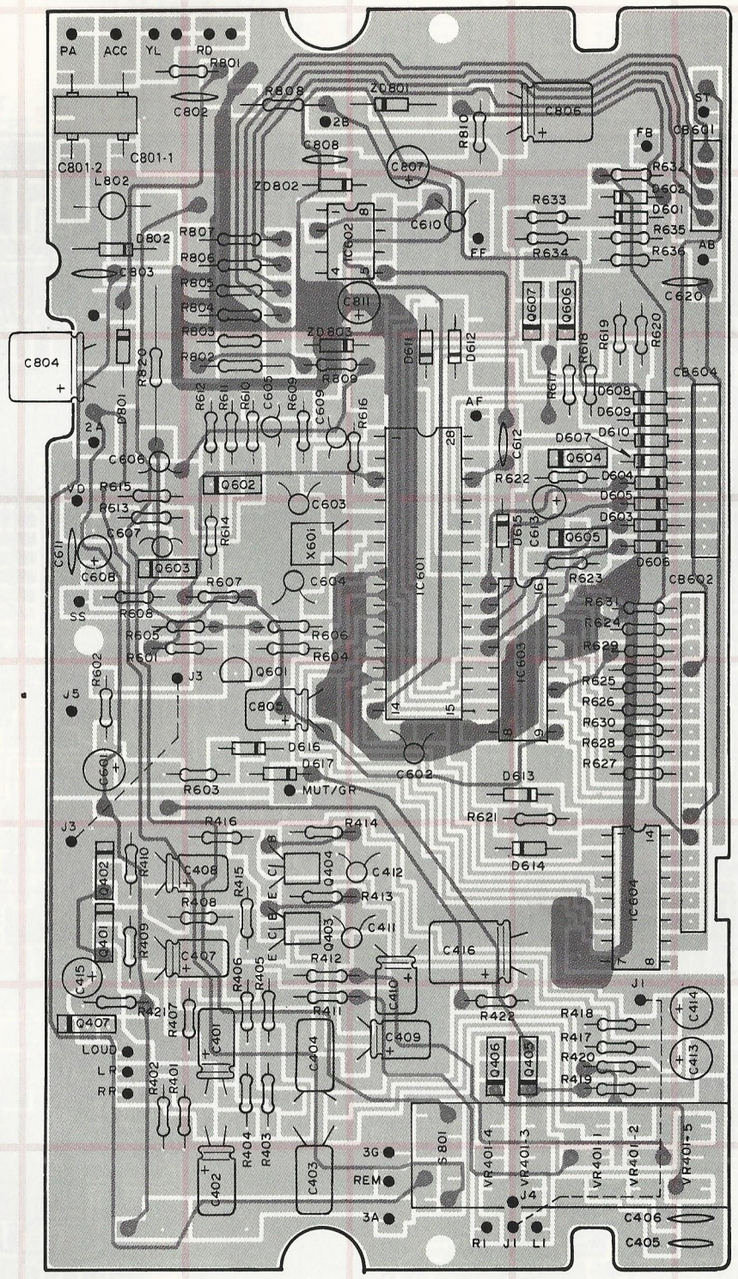

Top View

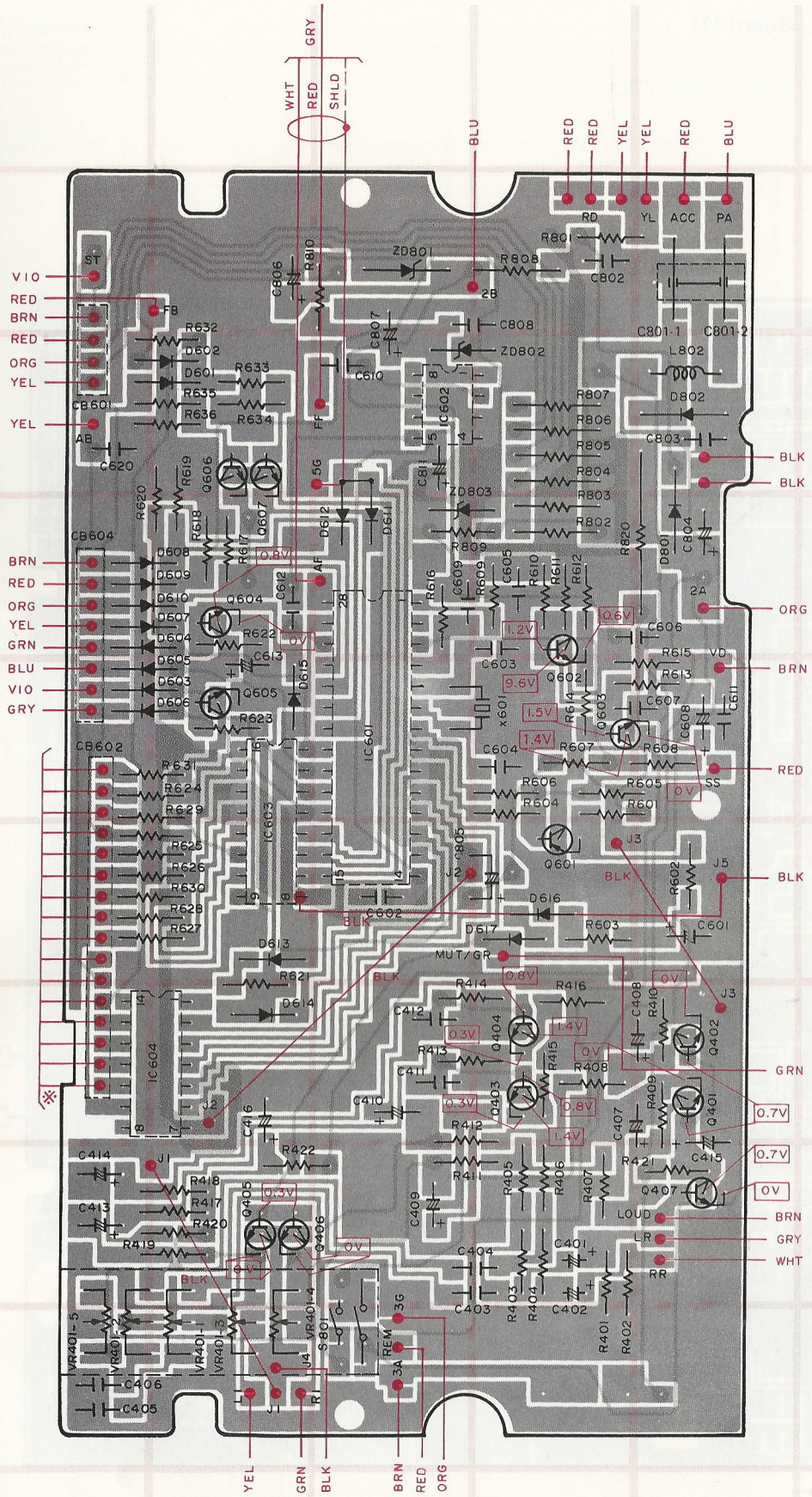

Bottom View

IC603

1	2.5V (3.2V)
2	2.8V (3.5V)
3	4.5V (3.8V)
4	1.8V (2.8V)
5	1.5V (0.5V)
6	2.0V (1.0V)
7	1.1V (2.0V)
8	0V
9	6.0V
10	0.7V
11	1.1V
12	1.1V
13	1.6V
14	3.5V
15	2.3V
16	2.3V

IC604

1	—
2	1V
3	1V
4	1V
5	1V
6	0.6V
7	0V
8	—
9	2.2V
10	2.2V
11	2.2V
12	2.2V
13	2.2V
14	—

Q606

C	1.5V (0.5V)
E	0V (0.5V)
B	0V

Q607

C	1.5V (0.5V)
E	2.1V (1.2V)
B	0.7V

IC601

1	1.2V
2	—
3	6.2V
4	1.8V
5	1.6V
6	5.8V
7	0V
8	0V
9	0.6V
10	1V
11	1V
12	1V
13	1V
14	5.7V
15	1.1V (2.0V)
16	2.0V (1.0V)
17	1.5V (0.5V)
18	1.8V (2.8V)
19	4.5V (3.8V)
20	2.8V (3.5V)
21	2.5V (3.2V)
22	2.1V (1.2V)
23	0V (0V)
24	1V (1.8V)
25	0V (0.5V)
26	2.0V (6V)
27	0V
28	5.8V (2.3V)

IC602

1	4.9V
2	4.8V
3	0V
4	0V
5	3.7V
6	1.5V
7	—
8	—

1301

● Tuner P.C. Board (1)

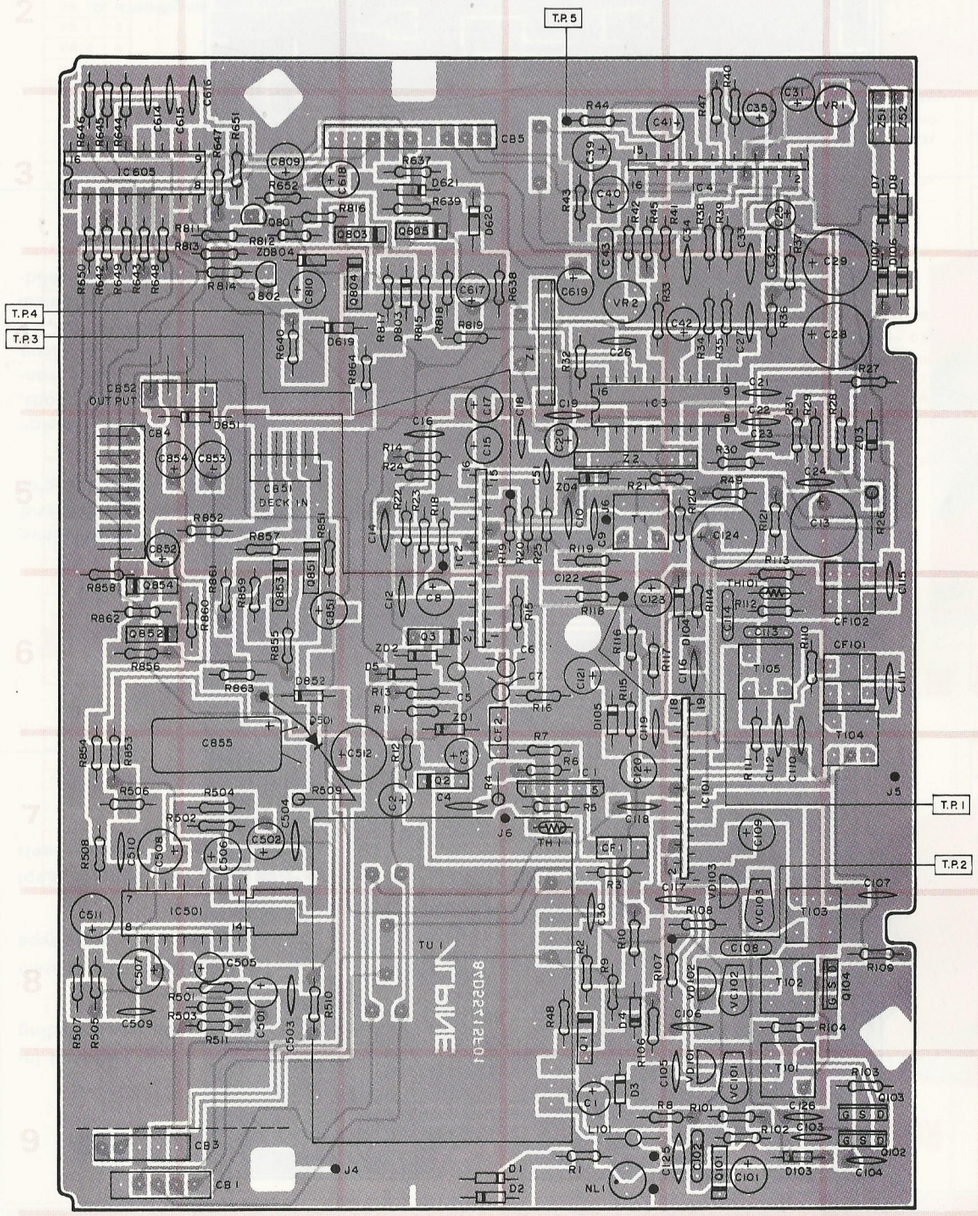

Top View

IC101

1	(0V)
2	(0V)
3	(0V)
4	(0V)
5	(2.5V)
6	(1.4V)
7	(2.5V)
8	(6.7V)
9	(9.0V)
10	(0V)
11	(0.6V)
12	(1.5V)
13	(4.7V)
14	(1.8V)
15	(7.4V)
16	(9.0V)
17	(7.4V)
18	(4.8V)
19	(0.2V)

IC501

1	—
2	12.2V
3	7.2V
4	7.2V
5	6.6V
6	5.8V
7	0V
8	0V
9	5.8V
10	6.6V
11	7.2V
12	7.2V
13	7.7V
14	—

IC605

1	5.0V
2	6.5V
3	0V
4	6.5V
5	0V
6	6.5V
7	—
8	0V
9	—
10	6.5V
11	—
12	—
13	4.2V
14	4.2V
15	4.2V
16	5.7V

Q102, 103

D	8.4V
S	0V
G	0V

Q104

D	8.6V
S	0V
G	0V

IC1

1	1.4V
2	7.6V
3	8.7V
4	1.4V
5	0V

IC2

1	2.3V
2	2.3V
3	2.3V
4	0V
5	1.8V
6	0.7V
7	4.7V
8	4.5V
9	4.5V
10	0V
11	4.6V
12	9.4V
13	4.6V
14	3.4V
15	1.1V
16	3.6V

IC3

1	5.3V
2	5.4V
3	5.0V
4	6.0V
5	5.3V
6	4.1V
7	4.5V
8	4.6V
9	—
10	0V
11	0V
12	0.4V
13	2.7V
14	2.8V
15	1.8V
16	0V

IC4

1	11.0V
2	2.2V
3	2.7V
4	2.3V
5	3.4V
6	3.4V
7	0V
8	0V
9	0V
10	8.0V
11	2.0V
12	2.0V
13	1.4V
14	2.0V
15	2.0V
16	2.1V

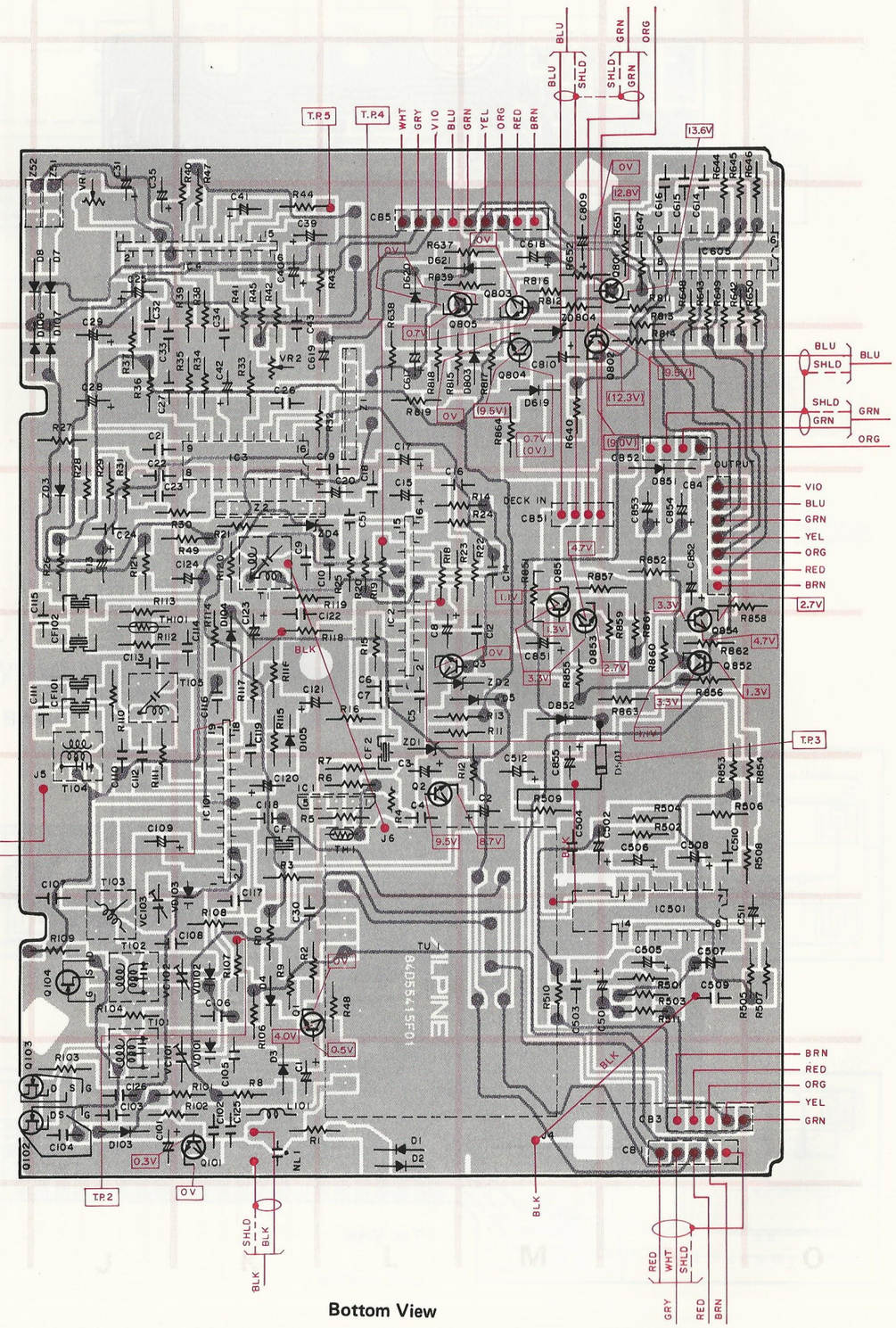

Bottom View

Wiring Diagram

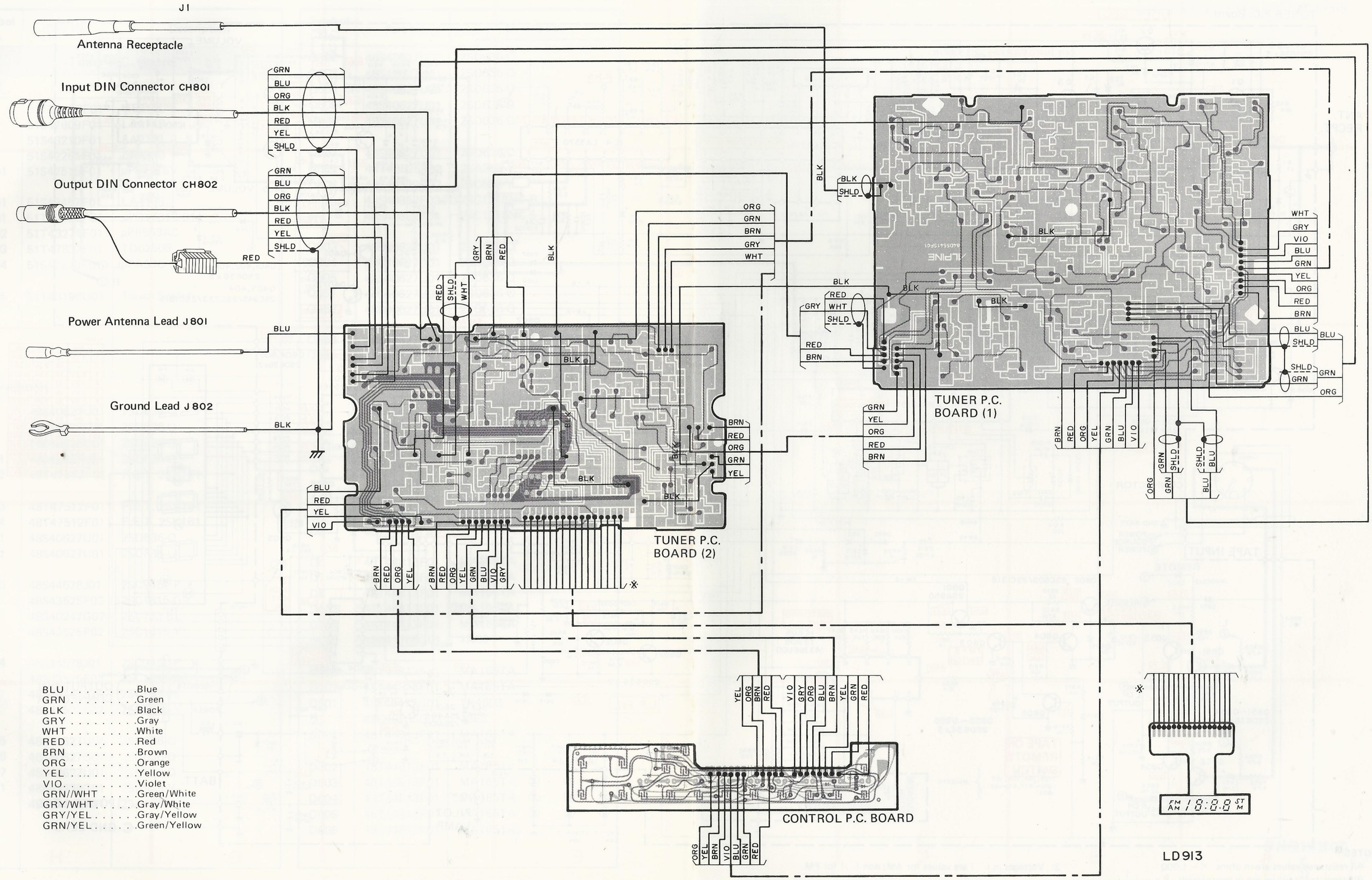

Schematic Diagram

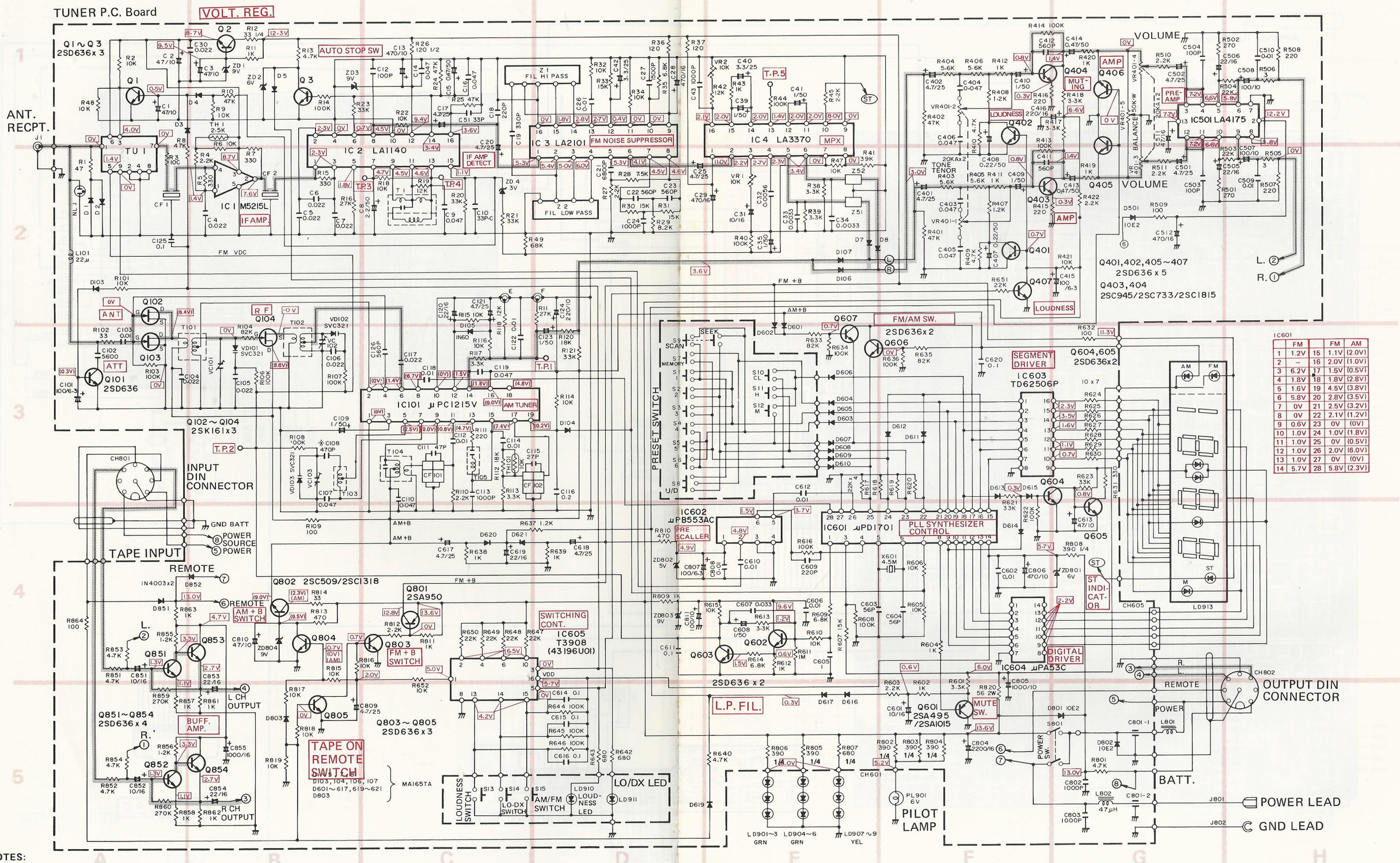

IC601	FM		FM	AM
1	1.2V	15	1.1V	(2.0V)
2	–	16	2.0V	(1.0V)
3	6.2V	17	1.5V	(0.5V)
4	1.8V	18	1.8V	(2.8V)
5	1.6V	19	4.5V	(3.8V)
6	5.8V	20	2.8V	(3.5V)
7	0V	21	2.5V	(3.2V)
8	0V	22	2.1V	(1.2V)
9	0.6V	23	0V	(0V)
10	1.0V	24	1.0V	(1.8V)
11	1.0V	25	0V	(0.5V)
12	1.0V	26	2.0V	(6.0V)
13	1.0V	27	0V	(0V)
14	5.7V	28	5.8V	(2.3V)

NOTES:

1. All resistance values are in ohms. K = 1,000
2. All capacitance values are in microfarads. $P = \frac{1}{1,000,000}$
3. Voltages in ( ) are values for AM; non ( ) for FM.

Electrical Parts List

Resistors (All resistors are carbon film, ¼W, ±5% unless otherwise noted.)
uF = microfarads, pF = picofarads

Symbol No.	Part No.	Description
Tuner P.C. Board		
IC		
IC1	51T50092F01	M5215L
IC2	51S47809F01	LA1140
IC3	51S43210F01	LA2101
IC4	51S42261F01	LA3370
IC101	51S47515F01	μPC1215V
IC501	51S43457F01	LA4175
IC601	51T57623F01	μPD1701C-014
IC602	51T43271F01	μPB553AC
IC603	51T47837F01	TD62506
IC604	51S42270F01	μPA53C
IC605	51T43196U01	Touch Switch
Transistors		
Q1	48S40627U01	2SD636-Q
Q2	48S40627U01	2SD636-Q
Q3	48S40627U01	2SD636-Q
Q101	48S40627U01	2SD636-Q
Q102	48T47512F01	F.E.T. 2SK161
Q103	48T47512F01	F.E.T. 2SK161
Q104	48T47512F01	F.E.T. 2SK161
Q401	48S40627U01	2SD636-Q
Q402	48S40627U01	2SD636-Q
Q403	48S44578J01	2SC945L-P
or	48S43525F03	2SC1815-GR
or	48S40247G02	2SC733-BL
or	48S43525F02	2SC1815-Y
Q404	48S44578J01	2SC945L-P
or	48S43525F03	2SC1815-GR
or	48S40247G02	2SC733-BL
or	48S43525F02	2SC1815-Y
Q405	48S40627U01	2SD636-Q
Q406	48S40627U01	2SD636-Q
Q407	48S40627U01	2SD636-Q
Q601	48S43238G01	2SA945-Y
or	48T51118F01	2SA1015-Y
Q602	48S40627U01	2SD636-Q
Q603	48S40627U01	2SD636-Q
Q604	48S40627U01	2SD636-Q
Q605	48S40627U01	2SD636-Q
Q606	48S40627U01	2SD636-Q
Q607	48S40627U01	2SD636-Q
Q801	48T43526F02	2SA950-Y
Q802	48S43239G02	2SC509-Y
or	48S40832F03	2SC1318NC-R
or	48S40832F04	2SC1318NC-S
Q803	48S40627U01	2SD636-Q
Q804	48S40627U01	2SD636-Q
Q805	48S40627U01	2SD636-Q
Q851	48S40627U01	2SD636-Q
Q852	48S40627U01	2SD636-Q
Q853	48S40627U01	2SD636-Q
Q854	48S40627U01	2SD636-Q
Diodes		
D1	48T44813F01	MA165TA
D2	48T44813F01	MA165TA
D3	48T44813F01	MA165TA
D4	48T44813F01	MA165TA
D5	48T44813F01	MA165TA
D6	48T44813F01	MA165TA
D7	48T44813F01	MA165TA
D8	48T44813F01	MA165TA
D103	48T44813F01	MA165TA
D104	48T44813F01	MA165TA
D105	48B41768G01	1N60
D106	48T44813F01	MA165TA
D107	48T44813F01	MA165TA
D501	48S40477U01	1N4003
or	48C40235G02	10E2
D601	48T44813F01	MA165TA
D602	48T44813F01	MA165TA
D603	48T44813F01	MA165TA
D604	48T44813F01	MA165TA
D605	48T44813F01	MA165TA
D606	48T44813F01	MA165TA

Symbol No.	Part No.	Description
D607	48T44813F01	MA165TA
D608	48T44813F01	MA165TA
D609	48T44813F01	MA165TA
D610	48T44813F01	MA165TA
D611	48T44813F01	MA165TA
D612	48T44813F01	MA165TA
D613	48T44813F01	MA165TA
D614	48T44813F01	MA165TA
D615	48T44813F01	MA165TA
D616	48T44813F01	MA165TA
D617	48T44813F01	MA165TA
D619	48T44813F01	MA165TA
D620	48T44813F01	MA165TA
D621	48T44813F01	MA165TA
D801	48S40477U01	1N4003
or	48C40235G02	10E2
D802	48S40477U01	1N4003
or	48C40235G02	10E2
D803	48T44813F01	MA165TA
D851	48S40477U01	1N4003
or	48C40235G02	10E2
D852	48S40477U01	1N4003
or	48C40235G02	10E2
ZD1	48T40059U26	Zener, HZ9C-2L
or	48T40732F38	Zener, RD10E-B1
ZD2	48T40059U04	Zener, HZ6B-1L
or	48T40732F21	Zener, RD5.6E-B2
ZD3	48T40059U26	Zener, HZ9C-2L
or	48T40732F38	Zener, RD10E-B1
ZD4	48T40150U01	Zener, HZ3A-1
ZD801	48T40059U04	Zener, HZ6B-1L
or	48T40732F21	Zener, RD5.6E-B2
ZD802	48T40150U25	Zener, HZ5C-1
or	48T40732F18	Zener, RD5.1E-B2
ZD803	48T40059U26	Zener, HZ9C-2L
or	48T40732F38	Zener, RD10E-B1
ZD804	48T40059U26	Zener, HZ9C-2L
or	48T40732F38	Zener, RD10E-B1
VD101	48T41264F03	Varicap, SVC321
or	48T41264F06	Varicap, SVC321-B
VD102	48T41264F03	Varicap, SVC321
or	48T41264F06	Varicap, SVC321-B
VD103	48T41264F03	Varicap, SVC321
or	48T41264F06	Varicap, SVC321-B

Symbol No.	Part No.	Description
Thermisters/Coils		
TH1	48S42931U30	Thermister, 2.5KΩ
TH101	48S42931U34	Thermister, 10KΩ
L101	24T51656F26	Coil, 22 μH
L802	24T41292U01	Coil, 47 μH
T1	24T50529F01	Coil, FM IFT (BLK)
T101	24T47505F02	Coil, AM ANT. (WHT)
T102	24T47506F02	Coil, AM RF (BLU)
T103	24T47507F01	Coil, AM OSC (RED)
T104	24T47508F02	Coil, AM IFT. 1 (BLK)
T105	24T47509F02	Coil, AM IFT. 2 (YEL)
Filters/Lamp/Crystal		
CF1	91T40309T02	Ceramic Filter 10.7 MHz
CF2	91T40309T02	Ceramic Filter 10.7 MHz
CF101	91T47504F03	Ceramic Filter 450-G
CF102	91T47504F01	Ceramic Filter 450-C
Z1	91T51712F02	High Pass Filter
Z2	91T51713F01	Low Pass Filter
Z51	91T55509F01	MPX Filter
Z52	91T55509F01	MPX Filter
NL1	65B44082J01	Neon Lamp
X601	48T43272F01	Crystal (4.5 MHz)
Capacitors		
C1	23T43247F13	Electrolytic 47 uF/10
C2	23T43247F13	Electrolytic 47 uF/10V
C3	23T43247F13	Electrolytic 47 uF/10V
C4	8T44979P10	Ceramic 0.022 uF
C5	8T44979P10	Ceramic 0.022 uF
C6	8T44979P10	Ceramic 0.022 uF
C7	8T44979P10	Ceramic 0.022 uF
C8	23T43247F06	Electrolytic 2.2 uF/50V
C9	8T44989P12	Ceramic 0.047 uF
C10	21C441701J38	Ceramic 33 pF
C12	21C45322G22	Ceramic 100 pF
C13	23S41198U55	Electrolytic 470 uF/10V
C14	8T44979P12	Ceramic 0.047 uF
C15	23T43247F04	Electrolytic 0.47 uF/50V
C16	8T44979P12	Ceramic 0.047 uF

Symbol No.	Part No.	Description	
C17	23T43247F08	Electrolytic	4.7 uF/25V
C18	21C45322G25	Ceramic	220 pF
C19	21C45322G26	Ceramic	330 pF
C20	23T43247F08	Electrolytic	4.7 uF25V
C21	8T44979P07	Ceramic	6800 pF
C22	21C45322G40	Ceramic	560 pF
C23	21C45322G40	Ceramic	560 pF
C24	8T44979P01	Ceramic	1000 pF
C25	23T43247F08	Electrolytic	4.7 uF/25V
C26	8T44979P08	Ceramic	0.01 uF
C27	8T44979P03	Ceramic	1500 pF
C28	23B44780P05	Electrolytic	470 uF/16V
C29	23B44780P05	Electrolytic	470 uF/16V
C30	23B44979P10	Ceramic	0.022 uF
C31	23T43247F09	Electrolytic	10 uF/16V
C32	8T42629F64	Mylar	0.0056 uF
C33	8T44979P05	Ceramic	3300 pF
C34	8T44979P05	Ceramic	3300 pF
C35	23T43247F01	Electrolytic	0.1 uF/50V
C39	23T43247F05	Electrolytic	1 uF/50V
C40	23T43247F07	Electrolytic	3.3 uF/25V
C41	23T43247F05	Electrolytic	1 uF/50V
C42	23T43247F07	Electrolytic	3.3 uF/25V
C43	8T42081U25	Polystyrene	1000 pF
C51	21C41701J38	Ceramic	33 pF
C101	23T43247F15	Electrolytic	100 uF/6.3V
C102	8T42629F64	Mylar	0.0058 uF
C103	8T44979P08	Ceramic	0.01 uF
C104	8T44979P10	Ceramic	0.022 uF
C105	8T44979P10	Ceramic	0.022 uF
C106	8T44979P10	Ceramic	0.022 uF
C107	8T44979P12	Ceramic	0.047 uF
C108	8T44481F05	Polystyrene	470 pF
C109	23T43247F05	Electrolytic	1 uF/50V
C110	8T44979P12	Ceramic	0.047 uF
C111	21C45322G18	Ceramic	47 pF
C112	8T44979P08	Ceramic	0.01 uF
C113	8T42629F05	Mylar	0.001 uF
C114	8T44979P08	Ceramic	0.01 uF
C115	21C45322G15	Ceramic	27 pF
C116	21B41870J03	Ceramic	0.2 uF
C117	8T44979P10	Ceramic	0.022 uF
C118	8T44979P08	Ceramic	0.01 uF
C119	8T44979P12	Ceramic	0.047 uF
C120	23T43247F10	Electrolytic	22 uF/16V

Symbol No.	Part No.	Description	
C121	23T43247F08	Electrolytic	4.7 uF/25V
C122	8T44979P08	Ceramic	0.01 uF
C123	23T43247F05	Electrolytic	1 uF/50V
C124	23S41198U40	Electrolytic	220 uF/10V
C125	21B41870J02	Ceramic	0.1 uF
C126	21C45322G40	Ceramic	560 pF
C401	23T43247F08	Electrolytic	4.7 uF/25V
C402	23T43247F08	Electrolytic	4.7 uF/25V
C403	8T42629F25	Mylar	0.047 uF
C404	8T42629F25	Mylar	0.047 uF
C405	8T44979P12	Ceramic	0.047 uF
C406	8T44979P12	Ceramic	0.047 uF
C407	23T43247F02	Electrolytic	0.22 uF/50V
C408	23T43247F02	Electrolytic	0.22 uF/50V
C409	23T43247F05	Electrolytic	1 uF/50V
C410	23T43247F05	Electrolytic	1 uF/50V
C411	21C45322G40	Ceramic	560 pF
C412	21C45322G40	Ceramic	560 pF
C413	23T43247F04	Electrolytic	0.47 uF/50V
C414	23T43247F04	Electrolytic	0.47 uF/50V
C415	23T43247F15	Electrolytic	100 uF/6.3V
C416	23S41198U41	Electrolytic	220 uF/16V
C501	23T43247F08	Electrolytic	4.7 uF/25V
C502	23T43247F08	Electrolytic	4.7 uF/25V
C503	21C45322G22	Ceramic	100 pF
C504	21C45322G22	Ceramic	100 pF
C505	23T43247F10	Electrolytic	22 uF/16V
C506	23T43247F10	Electrolytic	22 uF/16V
C507	23S41198U33	Electrolytic	100 uF/10V
C508	23S41198U33	Electrolytic	100 uF/10V
C509	8T44979P08	Ceramic	0.01 uF
C510	8T44979P08	Ceramic	0.01 uF
C511	23T43247F14	Electrolytic	47 uF/16V
C512	23B44780P05	Electrolytic	470 uF/16V
C601	23T43247F09	Electrolytic	10 uF/16V
C602	8T44979P08	Ceramic	0.01 uF
C603	21C45322G19	Ceramic	56 pF
C604	21C45322G19	Ceramic	56 pF
C605	21B41870J02	Ceramic	0.1 uF
C606	8T44979P08	Ceramic	0.01 uF
C607	8T44979P11	Ceramic	0.033 uF
C608	23T43247F05	Electrolytic	1 uF/50V
C609	21C45322G25	Ceramic	220 pF
C610	8T44979P08	Ceramic	0.01 uF
C611	21B41870J02	Ceramic	0.1 uF

Symbol No.	Part No.	Description
C612	8T44979P08	Ceramic 0.01 uF
C613	23T43247F13	Electrolytic 47 uF/10V
C614	21B41780J02	Ceramic 0.1 uF
C615	21B41780J02	Ceramic 0.1 uF
C616	21B41780J02	Ceramic 0.1 uF
C617	23T43247F08	Electrolytic 4.7 uF/25V
C618	23T43247F08	Electrolytic 4.7 uF/25V
C619	23T43247F10	Electrolytic 22 uF/16V
C620	21B41870J02	Ceramic 0.1 uF
C801	8T52837F01	
C802	8T44979P01	Ceramic 1000 pF
C803	8T44979P01	Ceramic 1000 pF
C804	23T43707U01	Electrolytic 2200 uF/16V
C805	23C42170G24	Electrolytic 1000 uF/10V
C806	23S41198U55	Electrolytic 470 uF/10V
C807	23T43247F15	Electrolytic 100 uF/6.3V
C808	8T44979P08	Ceramic 0.01 uF
C809	23T43247F08	Electrolytic 4.7 uF/25V
C810	23T43247F13	Electrolytic 47 uF/10V
C811	23S41198U33	Electrolytic 100 uF/10V
C851	23T43247F09	Electrolytic 10 uF/16V
C852	23T43247F09	Electrolytic 10 uF/16V
C853	23T43247F10	Electrolytic 22 uF/16V
C854	23T43247F10	Electrolytic 22 uF/16V
C855	23T51232F02	Electrolytic 1000 uF/16V
VC101	20T47503F02	Variable, TZ03 (Red)
VC102	20T47503F02	Variable, TZ03 (Red)
VC103	20T47503F02	Variable, TZ03 (Red)

Resistors (All resistors are carbon film, 1/8W, ±5% unless otherwise noted)

Symbol No.	Part No.	Description
R1	6T43159F33	47 ohm
R2	6T43159F89	10K ohm
R3	6T43159F41	100 ohm
R4	6S41042U73	2.2K ohm
R5	6T43159F53	330 ohm
R6	6T43159F89	10K ohm
R7	6T43159F53	330 ohm
R8	6T43160F06	47K ohm
R9	6T43159F89	10K ohm
R10	6T43160F06	47K ohm
R11	6T43159F65	1K ohm
R12	6S41801P14	33 ohm ¼W
R13	6T43159F81	4.7K ohm
R14	6T43160F14	100K ohm
R15	6T43159F53	330 ohm
R16	6T43159F99	27K ohm
R18	6T43159F89	10K ohm
R19	6T43159F91	12K ohm
R20	6T43160F02	33K ohm
R21	6T43160F02	33K ohm
R22	6T43159F89	10K ohm
R23	6T43160F02	33K ohm
R24	6T43160F06	47K ohm
R25	6T43160F06	47K ohm
R26	6D40801G41	120 ohm ½W
R27	6T43159F73	2.2K ohm
R28	6T43159F86	7.5K ohm
R29	6T43159F87	8.2K ohm
R30	6T43159F93	15K ohm
R31	6T43159F93	15K ohm
R32	6T43159F89	10K ohm
R33	6T43159F93	15K ohm
R34	6T43159F89	10K ohm
R35	6T43159F85	6.8K ohm
R36	6T43159F43	120 ohm
R37	6T43159F43	120 ohm
R38	6T43159F77	3.3K ohm
R39	6T43159F77	3.3K ohm
R40	6T43160F14	100K ohm
R41	6T43160F04	39K ohm
R42	6T43159F91	12K ohm
R43	6T43159F65	1K ohm
R44	6T43160F14	100K ohm
R45	6T43159F73	2.2K ohm
R47	6T43159F89	10K ohm
R48	6T43159F89	10K ohm
R49	6T43160F10	68K ohm
R101	6T43159F89	10K ohm
R102	6T43159F29	33 ohm
R103	6T43160F14	100K ohm
R104	6T43160F12	82K ohm
R106	6T43160F14	100K ohm
R107	6T43160F14	100K ohm
R108	6T43160F14	100K ohm
R109	6T43159F41	100 ohm

Symbol No.	Part No.	Description
R110	6T43159F73	2.2K ohm
R111	6T43159F49	220 ohm
R112	6T43159F95	18K ohm
R113	6T43159F77	3.3K ohm
R114	6T43159F89	10K ohm
R115	6T43159F89	10K ohm
R116	6T43159F89	10K ohm
R117	6T43159F77	3.3K ohm
R118	6T43159F91	12K ohm
R119	6T43159F99	27K ohm
R120	6T43159F95	18K ohm
R121	6T43160F02	33K ohm
R401	6T43160F06	47K ohm
R402	6T43160F06	47K ohm
R403	6T43159F83	5.6K ohm
R404	6T43159F83	5.6K ohm
R405	6T43159F83	5.6K ohm
R406	6T43159F83	5.6K ohm
R407	6T43159F67	1.2K ohm
R408	6T43159F67	1.2K ohm
R409	6T43159F81	4.7K ohm
R410	6T43159F81	4.7K ohm
R411	6T43159F65	1K ohm
R412	6T43159F65	1K ohm
R413	6T43160F14	100K ohm
R414	6R43160F14	100K ohm
R415	6T43159F49	220 ohm
R416	6T43159F49	220 ohm
R417	6T43159F77	3.3K ohm
R418	6T43159F77	3.3K ohm
R419	6T43159F65	1K ohm
R420	6T43159F65	1K ohm
R421	6T43159F89	10K ohm
R422	6T43159F73	2.2K ohm
R501	6T43159F51	270 ohm
R502	6T43159F51	270 ohm
R503	6T43159F97	22K ohm
R504	6T43159F97	22K ohm
R505	6T43159F31	39 ohm
R506	6T43159F31	39 ohm
R507	6T43159F49	220 ohm
R508	6T43159F49	220 ohm
R509	6T43159F41	100 ohm
R510	6T43159F73	2.2K ohm
R511	6T43159F73	2.2K ohm

Symbol No.	Part No.	Description
R601	6T43159F77	3.3K ohm
R602	6T43159F65	1K ohm
R603	6T43159F73	2.2K ohm
R604	6T43159F65	1K ohm
R605	6T43159F89	10K ohm
R606	6T43159F89	10K ohm
R607	6T43159F93	15K ohm
R608	6T43160F14	100K ohm
R609	6T43159F85	6.8K ohm
R610	6T43159F89	10K ohm
R611	6T43160F38	1M ohm
R612	6T43159F65	1K ohm
R613	6T43159F77	3.3K ohm
R614	6T43159F85	6.8K ohm
R615	6T43159F89	10K ohm
R616	6T43160F14	100K ohm
R617	6T43159F97	22K ohm
R618	6T43159F97	22K ohm
R619	6T43159F97	22K ohm
R620	6T43159F97	22K ohm
R621	6T43160F02	33K ohm
R622	6T43160F14	100K ohm
R623	6T43160F02	33K ohm
R624	6S55065F17	10 ohm 1/6W
R625	6S55065F17	10 ohm 1/6W
R626	6S55065F17	10 ohm 1/6W
R627	6S55065F17	10 ohm 1/6W
R628	6S55065F17	10 ohm 1/6W
R629	6S55065F17	10 ohm 1/6W
R630	6S55065F17	10 ohm 1/6W
R631	6T43159F53	330 ohm
R632	6T43159F41	100 ohm
R633	6T43160F12	82K ohm
R634	6T43160F14	100K ohm
R635	6T43160F12	82K ohm
R636	6T43160F14	100K ohm
R637	6T43159F67	1.2K ohm
R638	6T43159F65	1K ohm
R639	6T43159F65	1K ohm
R640	6T43159F81	4.7K ohm
R642	6T43159F61	680 ohm
R643	6T43159F61	680 ohm
R644	6T43160F14	100K ohm
R645	6T43160F14	100K ohm
R646	6T43160F14	100K ohm

Symbol No.	Part No.	Description
R647	6T43159F97	22K ohm
R648	6T43159F97	22K ohm
R649	6T43159F97	22K ohm
R650	6T43159F97	22K ohm
R651	6T43159F97	22K ohm
R652	6T43159F89	10K ohm
R801	6T43159F81	4.7K ohm
R802	6S40150T55	390 ohm ¼W
R803	6S40150T55	390 ohm ¼W
R804	6S40150T55	390 ohm ¼W
R805	6S40150T55	390 ohm ¼W
R806	6S40150T55	390 ohm ¼W
R807	6S40150T61	680 ohm ¼W
R808	6S40150T55	390 ohm ¼W
R809	6T43159F65	1K ohm
R810	6T43159F57	470 ohm
R811	6T43159F65	1K ohm
R812	6T43159F73	2.2K ohm
R813	6T43159F57	370 ohm
R814	6S41801P14	33 ohm ¼W
R815	6T43159F89	10K ohm
R816	6T43159F89	10K ohm
R817	6T43159F89	10K ohm
R818	6T43159F89	10K ohm
R819	6T43159F89	10K ohm
R820	6C44652G41	Metal Film 56 ohm 2W
R851	6T43159F81	4.7K ohm
R852	6T43159F81	4.7K ohm
R853	6T43159F81	4.7K ohm
R854	6T43159F81	4.7K ohm
R855	6T43159F67	1.2K ohm
R856	6T43159F67	1.2K ohm
R857	6T43159F65	1K ohm
R858	6T43159F65	1K ohm
R859	6T43160F24	270K ohm
R860	6T43160F24	270K ohm
R861	6T43159F65	1K ohm
R862	6T43159F65	1K ohm
R863	6T43159F65	1K ohm
R864	6T43159F41	100 ohm
VR1	18T42748F13	Variable 10K ohm
VR2	18T42748F13	Variable 10K ohm
VR401, S801	18T51934F01	Variable

Symbol No.	Part No.	Description
Misellaneous		
CH801	1T55416F01	INPUT DIN Connector
CH802	1T55417F01	OUTPUT DIN Connector
J1	9C47397F01	Antenna Receptacle
J801	1T55511F01	Power Antenna Lead
J802	1T45182F01	GND Lead
LD901	48T42449F02	LED, BG5535K (YEL)
LD902	48T42449F02	LED, BG5535K (YEL)
LD903	48T42449F02	LED, BG5535K (YEL)
LD904	48T42449F02	LED, BG5535K (YEL)
LD905	48T42449F02	LED, BG5535K (YEL)
LD906	48T42449F02	LED, BG5535K (YEL)
LD907	48T42449F03	LED, AA5535K (YEL)
LD908	48T42449F03	LED, AA5535K (YEL)
LD909	48T42449F03	LED, AA5535K (YEL)
LD910	48T47562F02	LED, TLG210 (GRN)
LD911	48T47562F02	LED, TLG210 (GRN)
LD913	48T56473F01	LED, Display
PL901	65B43447J01	Pilot Lamp, 6V-65mA
S1 ∿ 15	———	Included in parts ③ and ⑰ on the Cabinet Assembly Parts List.

Packing Method View

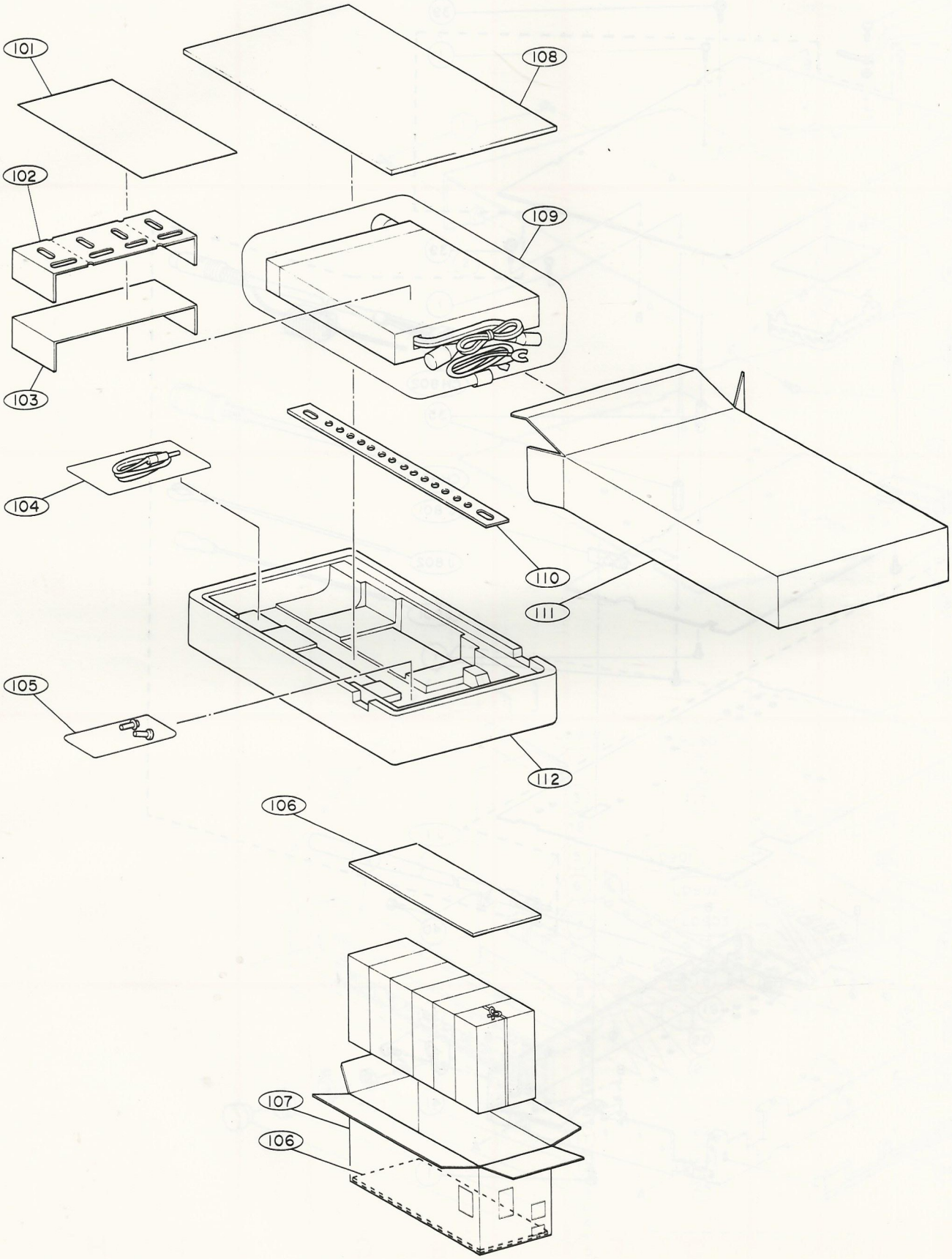

Packing Assembly Parts List

Symbol No.	Part No.	Description
101	1V56500F35	
101-1	68P55888F49	Owner's Manual
101-2	※	Sack, Polyethylene
102	7B52108F01	Bracket, Mounting
103	56A55353F02	Pad, Packing
104	1T55117F01	Antenna Feeder
105	1V56500F37	Kit, Installation
105-1	3B44963F01	Bolt, Hex. (M4 x 8)
105-2	3S40012G45	Screw, Tapping (M5 x 10)
105-3	※	Sack, Polyethelene
105-4	3S40012G66	Screw, Tapping (M5 x 20)
105-5	3B44963F05	Bolt, Hex. (M5 x 8)
105-6	2B47353F01	Nut, Hex. (M5)
105-7	3B44963F02	Bolt, Hex. (M5 x 20)
106	56A47150F09	Pad, Packing
107	※	Carton, Pacing
108	56B50686F02	Sheet, Packing
109	56B40230G14	Sack, Polyethylene
110	7B44934F01	Strap, Mounting
111	56B47663F19	Carton, Packing (Individual)
112	56C51939F01	Tray, Packing
Labels		
	54B57430F02	Composite (Base Chassis)
	※	Serial No. (Individual Carton)
	※	Serial No. (Master Carton)
	※	Date Code (Master Carton)
	※	"E" (Master Carton)

Symbol No.	Part No.	Description

Note: ※ The parts without part numbers are not supplied.

Exploded View (Cabinet)

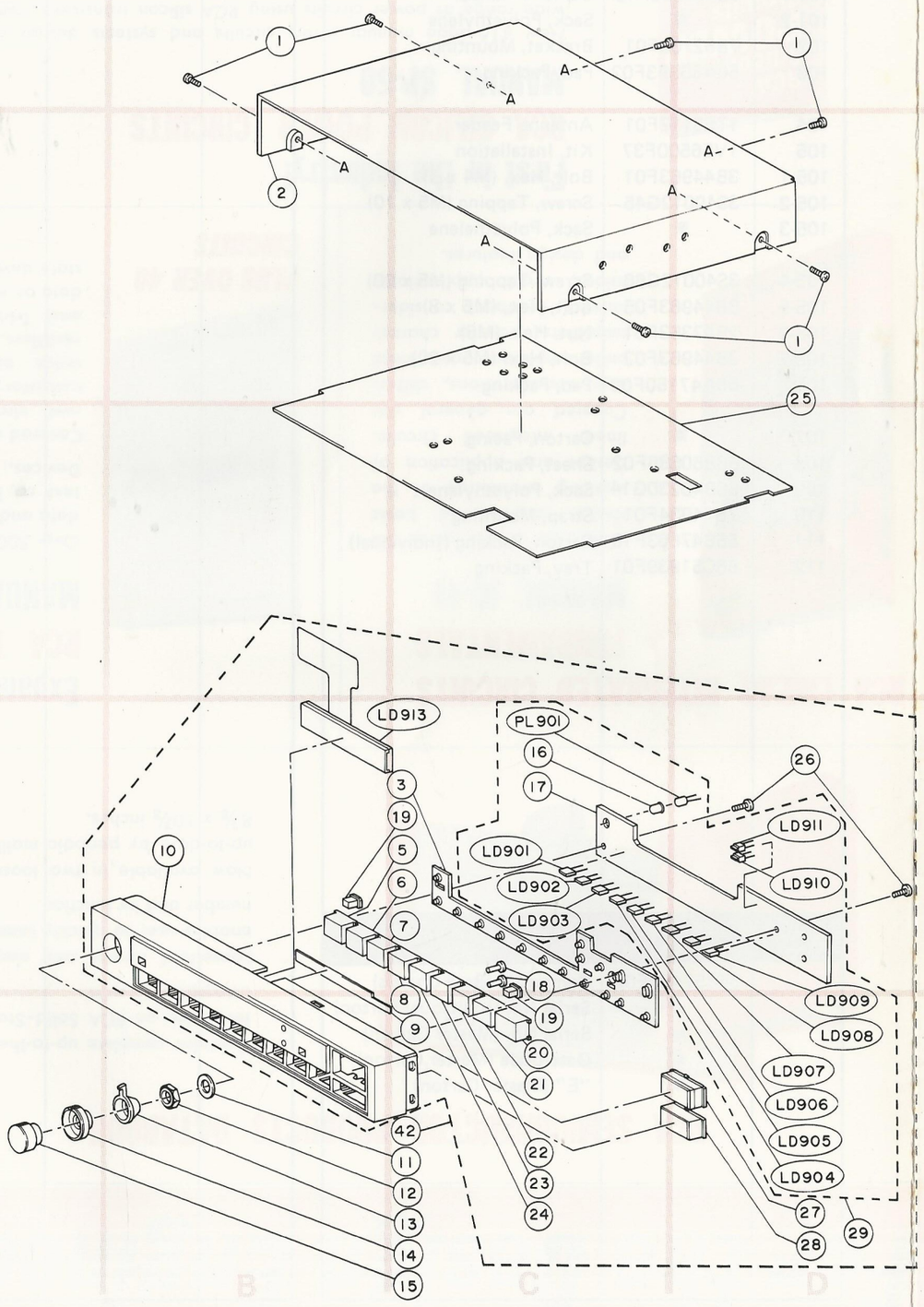

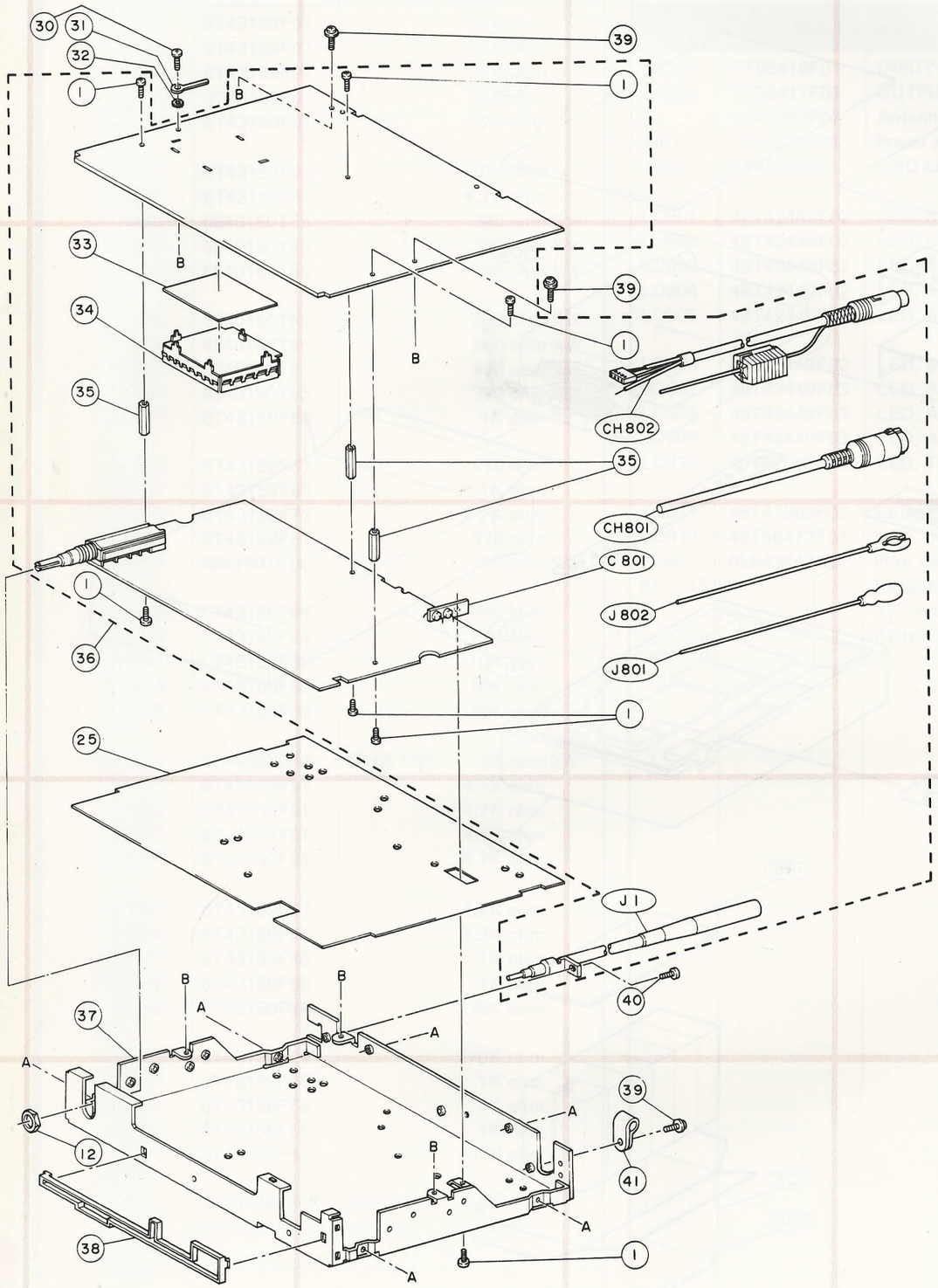

Cabinet Assembly Parts List

Part No.	Index	Part No.	Description
1		3S44205G34	Screw, BLK (M2.6 x 5)
2	2-B	15C51936F01	Top Cover
3	4-C	40B51931F01	Rubber, Switch
5	4-C	36B51930F01	Button, Preset (1)
6	4-C	36B51930F02	Button, Preset (2)
7	4-C	36B51930F03	Button, Preset (3)
8	5-C	36B51930F04	Button, Preset (4)
9	5-C	26A52717F01	Plate, Reflector
10	4-B	13C51938F02	Nosepiece Assembly
11	5-C	4S40070G10	Washer, Flat (M9)
12		2S40000G20	Nut, Hex (M9)
13	5-C	36B51925F01	Knob, Balance
14	5-C	36B51926F01	Knob, Tone Tenor
15	5-C	36B51923F01	Knob, Volume
16	4-C	43A41728U06	Bush, Lamp
17	4-C	※	Control P.C. Board
18	4-C	36A51927F01	Push Button (H. M)
19	5-C	36A51922F02	Push Button (Memory Clock)
20	5-C	36B51930F09	Button, Loudness
21	5-C	36B51930F08	Button, LO/DX
22	5-C	36B51930F07	Button, FM/AM
23	5-C	36B51930F06	Button, Preset (6)
24	5-C	36B51930F05	Button, Preset (5)
25		※	Fiber, Insulation
26	4-D	3S40012G46	Screw, Tapping (M2 x 6)
27	5-D	36B51929F01	Button, Tuning
28	5-D	36B51924F01	Button, SEEK/SCAN
29	5-D	1V56500F33	Control P.C. Board Assembly
30	1-E	3S44205G03	Screw (M3 x 8)
31	1-E	29A737272	Wire Tie
32	1-E	4S40072G15	Washer, Tooth (M4)
33	2-E	※	Fiber, Insulation
34	2-E	77T57678F01	FM Tuner
35		46A52945F01	Support
36	3-E	1V58600F99	Tuner P.C. Board Assembly
37	4-E	※	Base, Chassis
38	5-E	15A51928F01	Holder, Panel
39		3S40018G02	Screw, Tapping (M3 x 8)
40	4-G	3S44205G05	Screw (M3 x 5)
41	5-G	42B41424G06	Clamper, Cord
42	5-C	1V56500F32	Nosepiece Assembly

Symbol No.	Part No.	Description

Note: ※ The parts without part numbers are not supplied.

Semi-Conductor Lead Identifications

M5215L: IC1

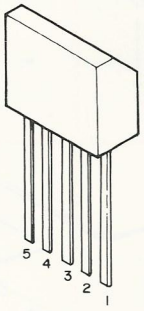

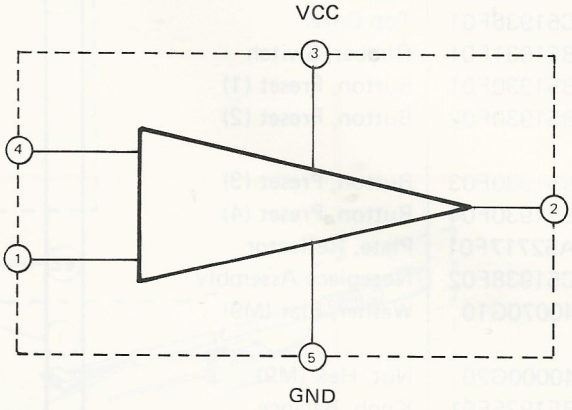

LA1140: IC2

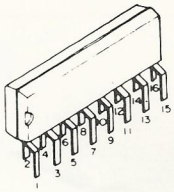

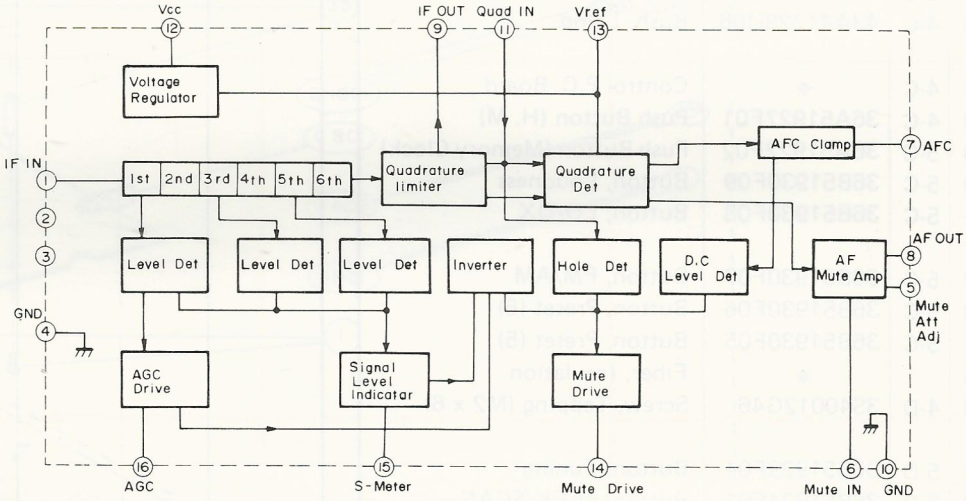

LA2101: IC3

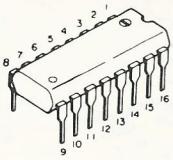

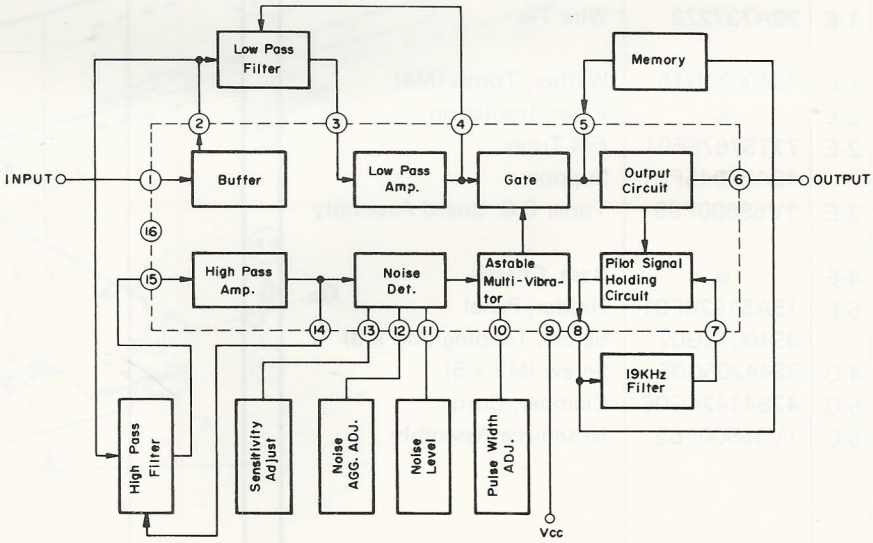

LA3370: IC4

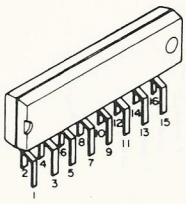

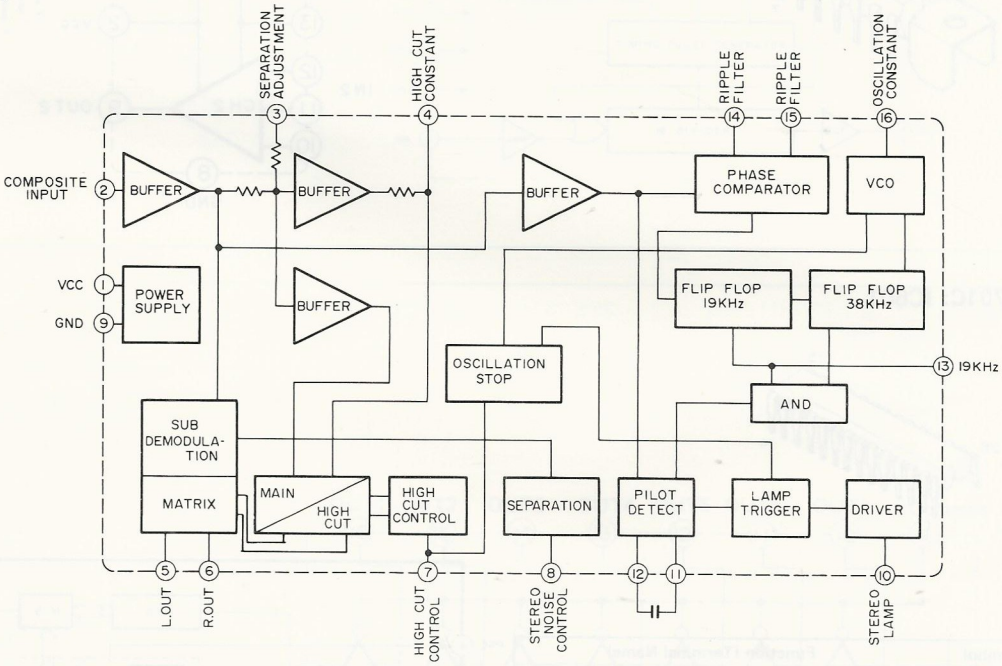

μPC1215V: IC101

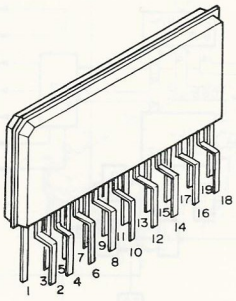

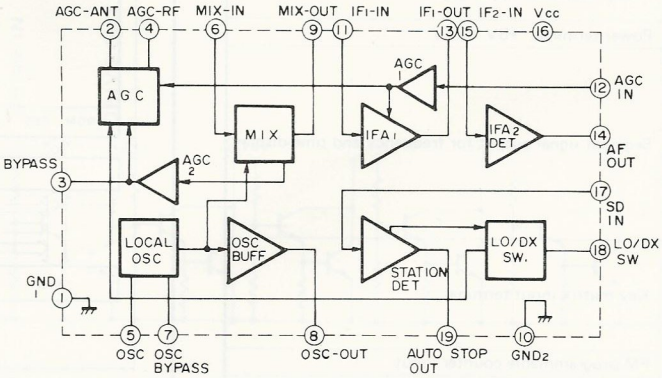

LA4175: IC501

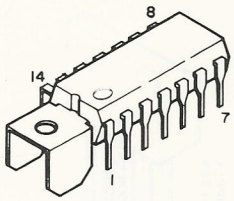

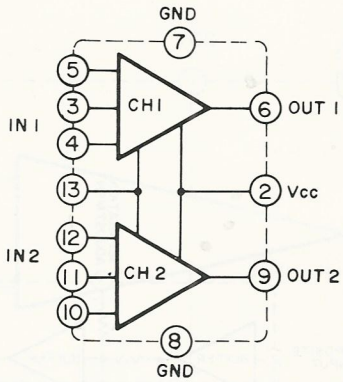

μPD1701C: IC601

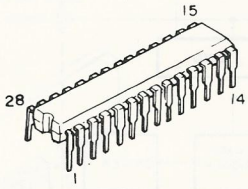

Pin No.	Symbol	Function (Terminal Name)
1	EO1	Phase detector output, same outputs from two terminals
2	EO2	
3	CE	Chip enable input
4	PSC	Prescaller control terminal; prescaller is μPB553AC
5	X1	Crystal oscillator terminal, 45 MHz
6	X2	
7	SD	Station detector input. Stop input during auto tuning
8	MUTE	Mute output, noise muting at frequency switching
9	D1	Digit signal output for frequency and time display D_1 : Symbol digit D_2 : Numeric, lower digit D_3 : Numeric, upper digit
10	D2	
11	D3	
12	D4	
13	D5	
14	VDD	Power terminal. +5V ±0.5V
15	SEGg	Segment signal output for frequency and time display
16	SEGf	
17	SEGe	
18	SEGd	
19	SEGc	
20	SEGb	
21	SEGa	
22	K3	Key matrix input terminal
23	K2	
24	K1	
25	K0	
26	FM	FM programmable counter input
27	GND	Ground terminal
28	AM	AM programmable counter input

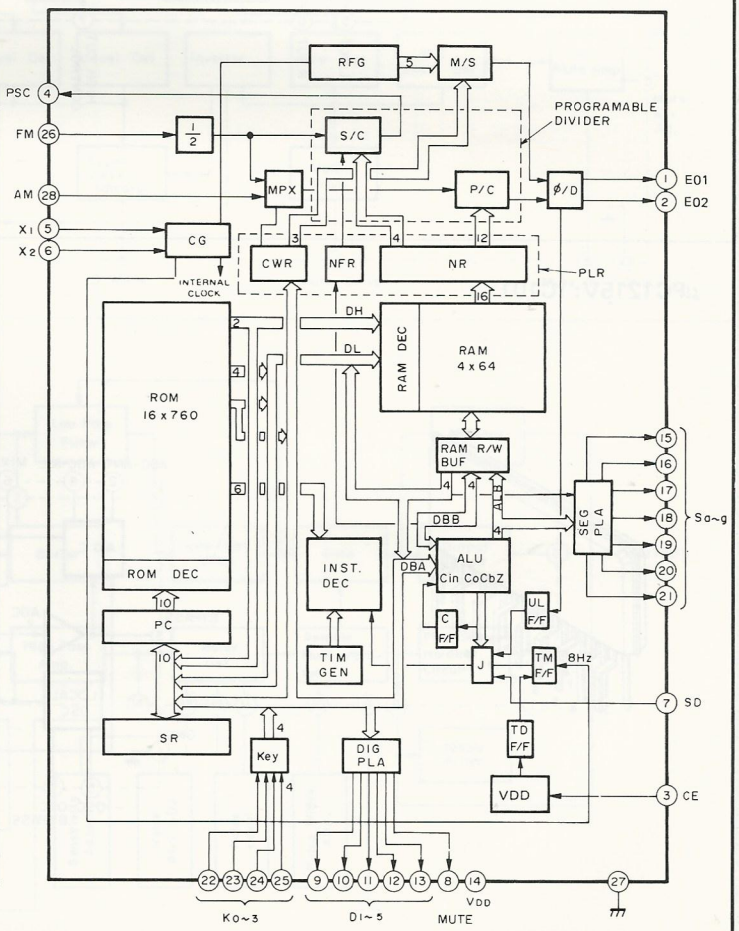

μPB553AC: IC602

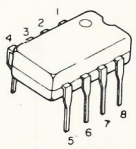

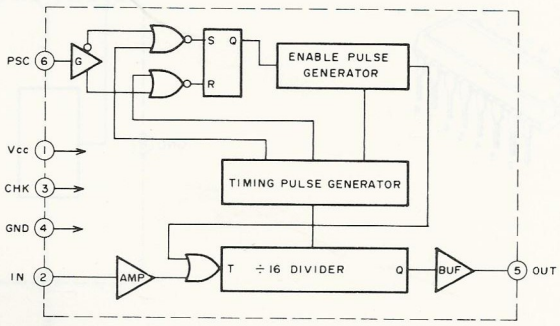

TD62506: IC603

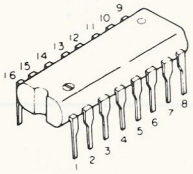

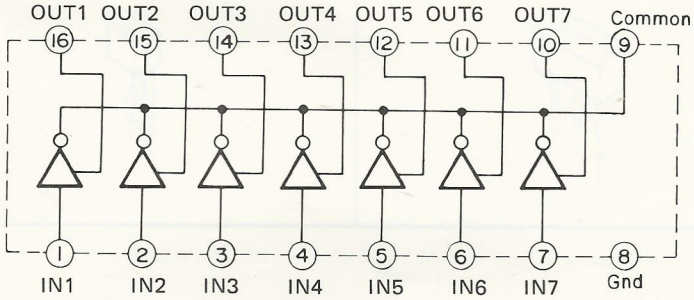

μPA53C: IC604

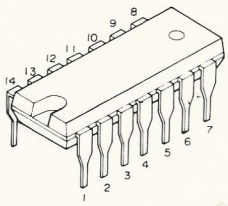

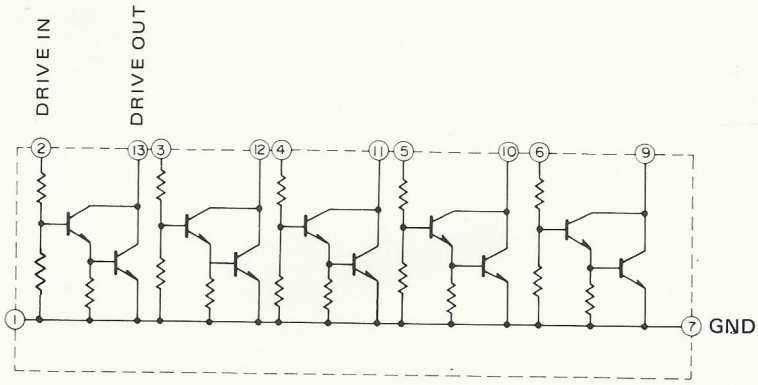

TOUCH SWITCH: IC605

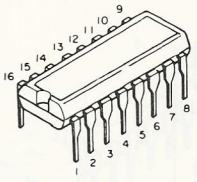

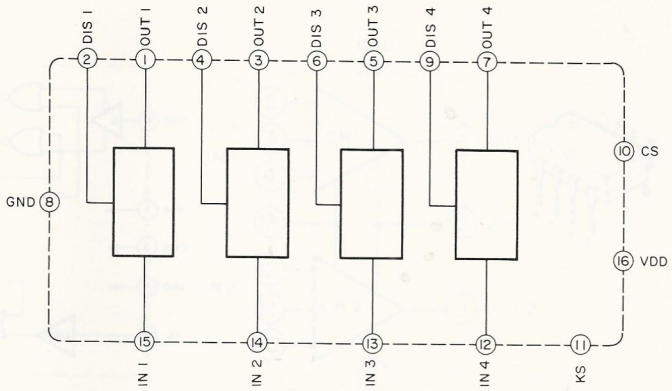

2SD636: Q1, 2, 3, 101, 401, 402 Q405, 406, 407, 602, Q603, 604, 605, 606, Q607, 803, 804, 805, Q851, 852, 853, 854

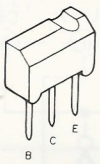

2SK161: Q102, 103, 104

2SC945, 2SC733, 2SC1815: Q403, 404
2SA495, 2SA1015: Q601
2SA950: Q801
2SC509, 2SC1318: Q802