Mitsubishi Model 12X-688 Schematic Diagram

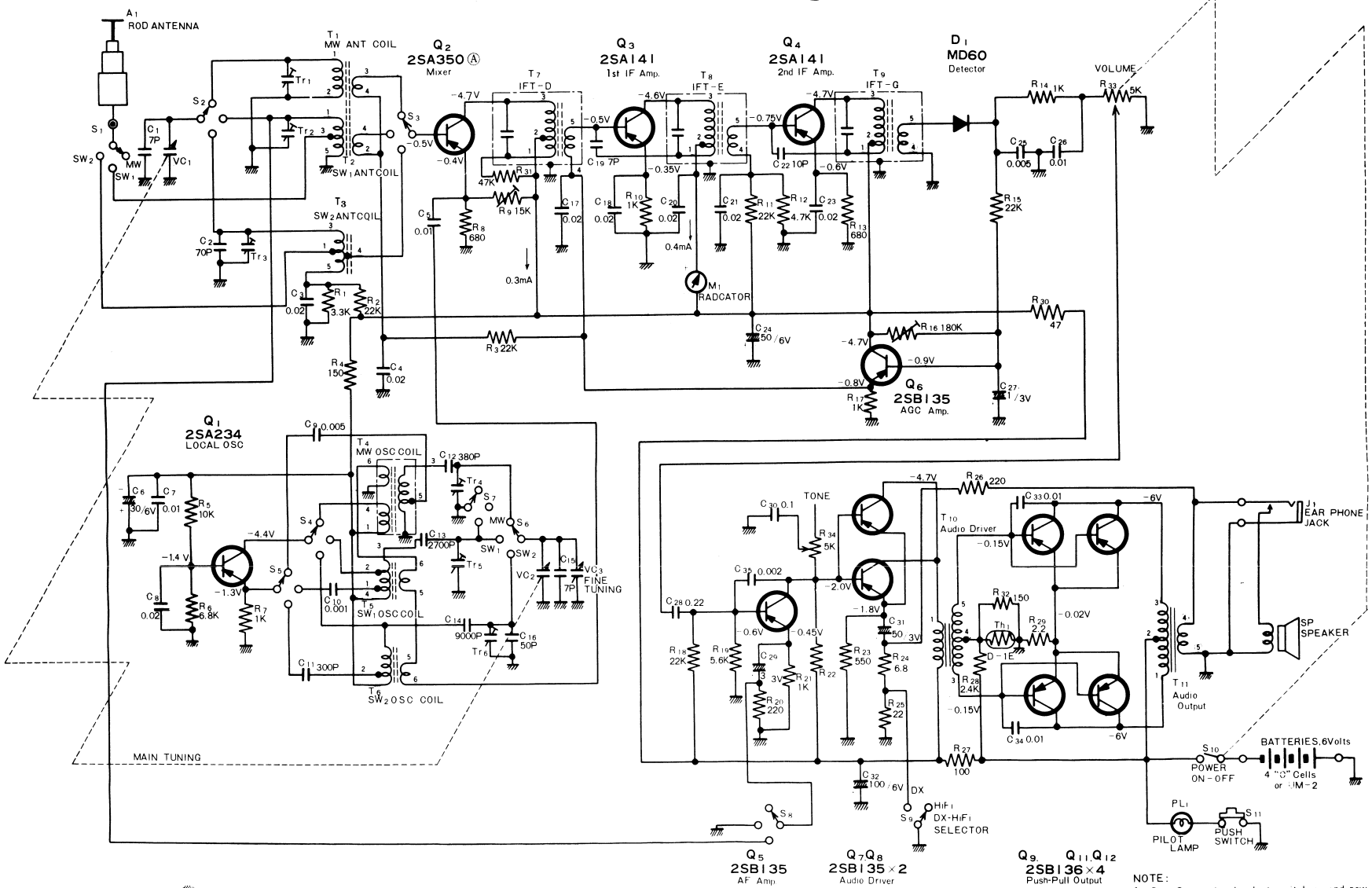

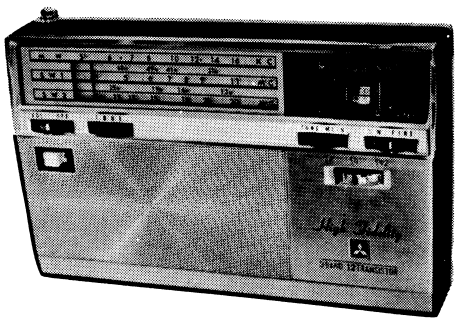

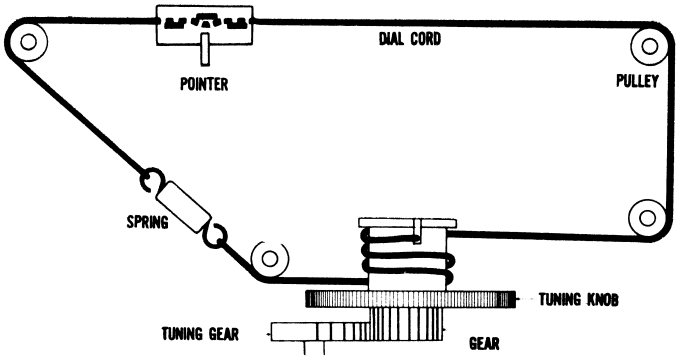

NOTE:

1. $S_1 \sim S_8$ are band select switches, and now indicate MW connection.
2. All resistors are ohms unless otherwise specified. K = 1000 ohms
3. All capacitors are in microfarads otherwise specified. P = 10^{-6} microfarad.
4. Voltage measurements are made with a VTVM from point indicated to battery (+) terminal.
5. With no signal and at minimum volume control total battery drain should be approx 15mA

Mitsubishi

12X-688 Bottom View of Printed Circuit Board

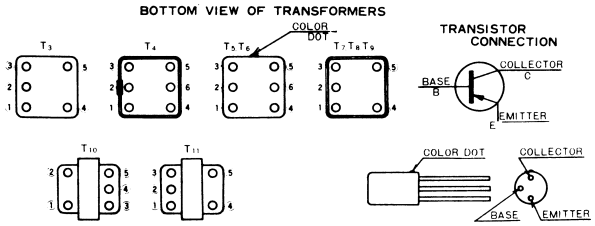

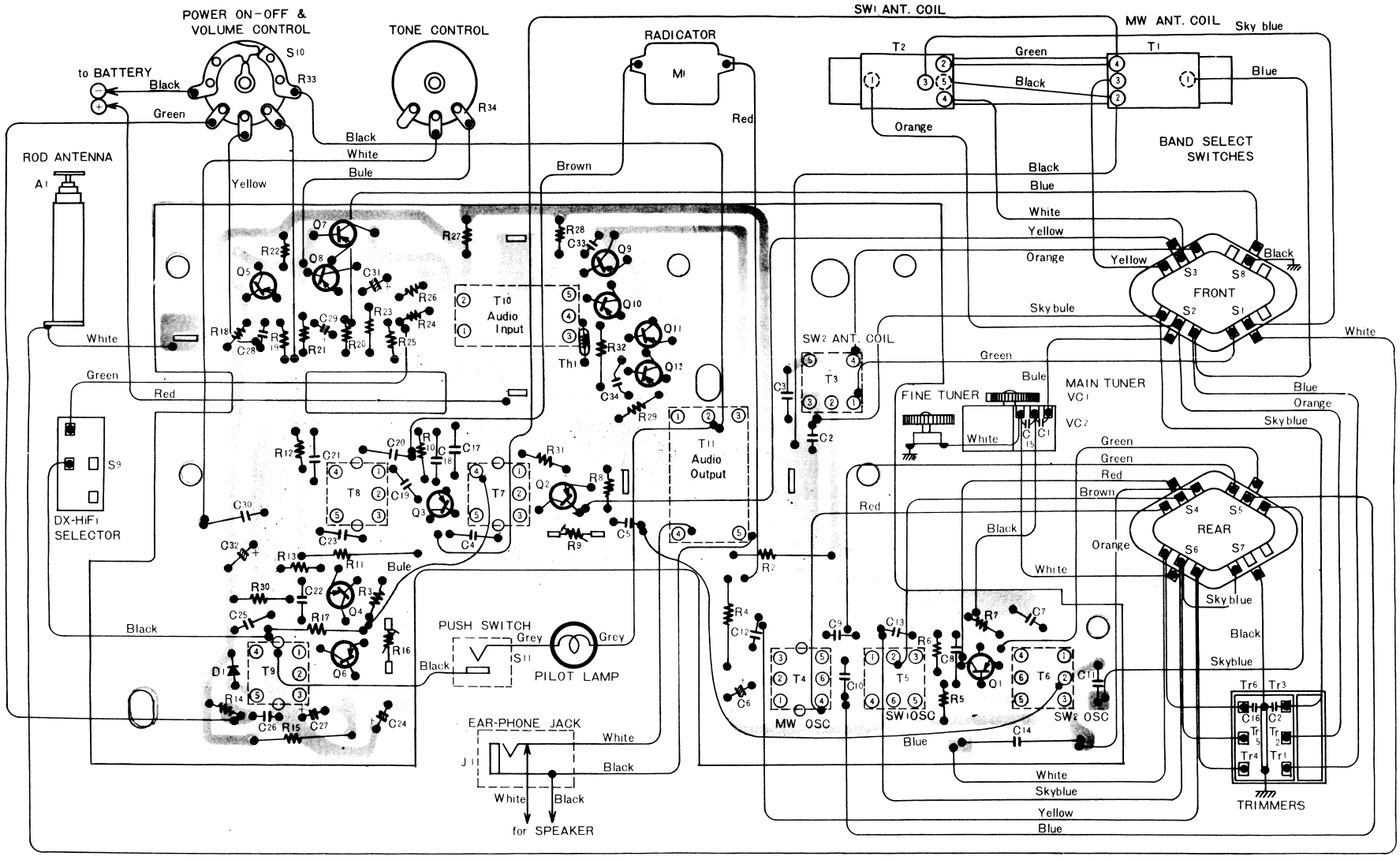

NOTE: 1. The wafers of band select switch are named the front and rear wafer in turn from the shaft side.

Mitsubishi

12X-688 Bottom View of Printed Circuit Board

M29

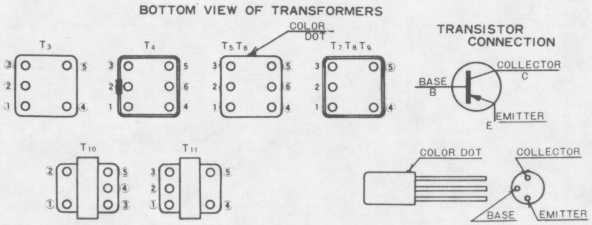

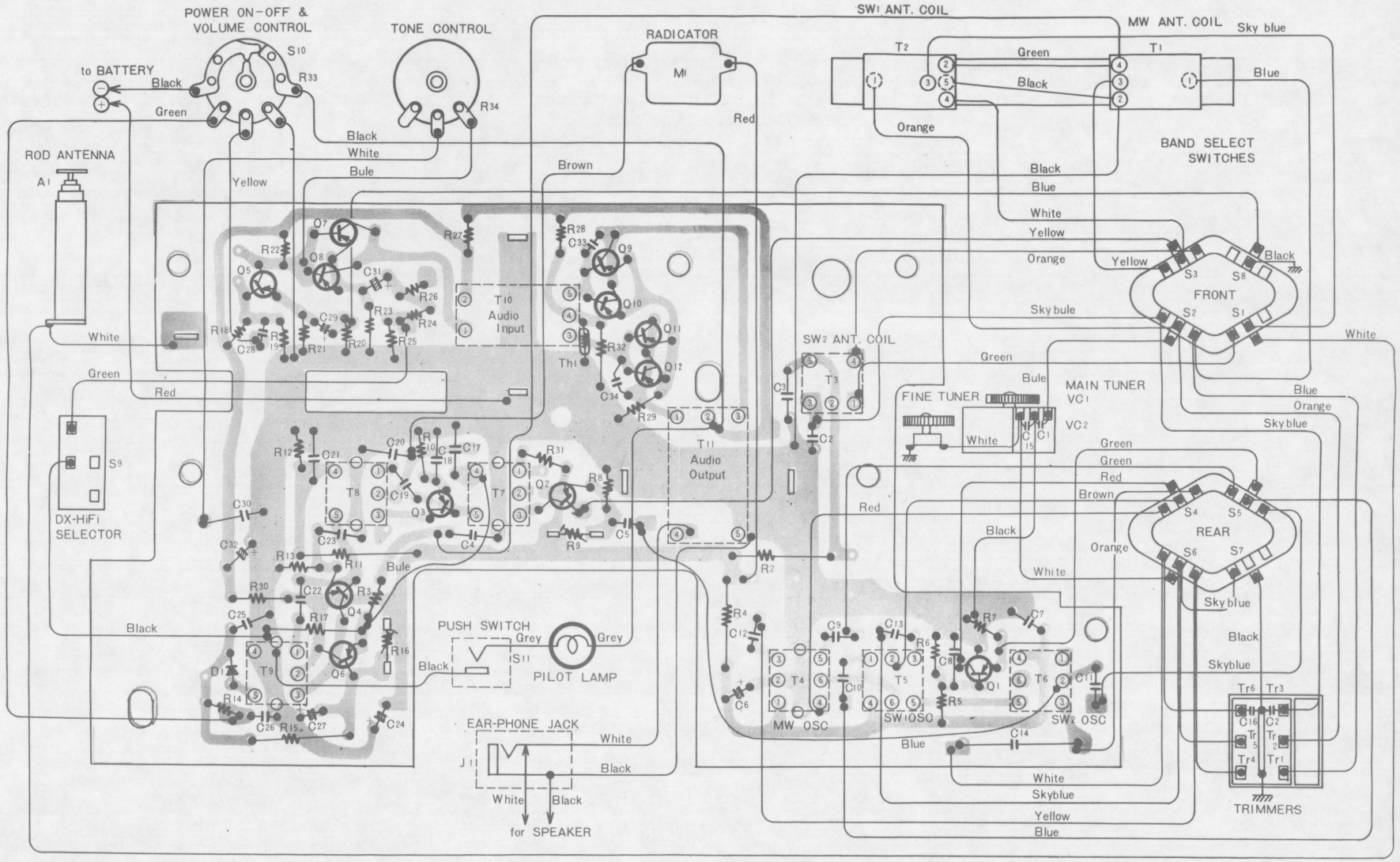

NOTE: 1. The wafers of band select switch are named the front and rear wafer in turn from the shaft side.

ALIGNMENT REQUIREMENT

SIGNAL GENERATOR—Use generator which provide 455 kc, 530~1605 kc and 4.0~22.5 Mc frequencys. Signal output should be modulated 30%. Keep output low enough to just give an indication to avoid AGC action.

INDICATOR—Connect a VTVM to the earphone jack by use of a plug or crips.

ALIGNMENT TOOL—Use a fiber or bakelite aligning tool that fits the slot in the screws of the oscillator coils, RF coils or IFT to prevent possible body-effect or chipping of the slot.

RECEIVER—Set the volume control to maximum and DX-HiFi switch to DX.

The adjustments of short wave bands are critical and therefore screws and slugs should be rotated very slowly to exact alignment point. Be sure during RF alignment that hand or any metal objects on bench do not come in close contact with antenna or detuning will occur and alignment will be incorrect.

And set the FINE TUNING KNOB to the position that the white mark is visible in the front.

ALIGNMENT PROCEDURE CHART

Step	Connet Signal Generator to	Band Selector to	Generator Frequency	Dial (VC) Setting	Adjust for Maximum
1	Terminal of $\boxed{VC_1}$ through 1~3pF capacitor	MW	455 kc	Maximum Frequency	T_9, T_8 & T_7 in order
2			600 kc	600 kc	MW osc. coil T_4
3			〃	〃	MW ant. coil T_1
4			1400 kc	1400 kc	MW osc. trimmer Tr_4
5			〃	〃	MW ant. trimmer Tr_1
6			Repeat steps 2~5, until no further change is noted		
7	Rod antenna A_1 through 10pF capacitor	SW_1	5 Mc	5 Mc	SW_1 osc. coil T_5
8			〃	〃	SW_1 ant. coil T_2
9			11 Mc	11 Mc	SW_1 osc. trimmer Tr_5
10			11.9 Mc	〃	Increase generator output until image signal is heard. If not heard, return to step 9 and Tr_5 must be rotated until another signal is heard.
11			11 Mc	〃	SW_1 ant. trimmer Tr_2
12			Repeat steps 7~9 and 11, until no further change is noted		
13	Rod antenna A_1 through 10pF capacitor	SW_2	12 Mc	12 Mc	SW_2 osc. coil T_6
14			〃	〃	SW_2 ant. coil T_3
15			22 Mc	22 Mc	SW_2 osc. trimmer Tr_6
16			22.9 Mc	〃	Increase generator output until image signal is heard. If not heard, return to step 15 and Tr_6 must be rotated until another signal is heard.
17			22 Mc	〃	SW_2 ant. trimmer Tr_3
18			Repeat steps 13~15 and 17, until no further change is noted		