SANYO

12-Transistor, MW/SW1/SW2/SW3
Portable Radio

MODEL 12X-630

SERVICE MANUAL

SANYO ELECTRIC CO., LTD.

INTERNATIONAL DIVISION : SANYO ELECTRIC TRADING CO.,LTD.
OSAKA, JAPAN

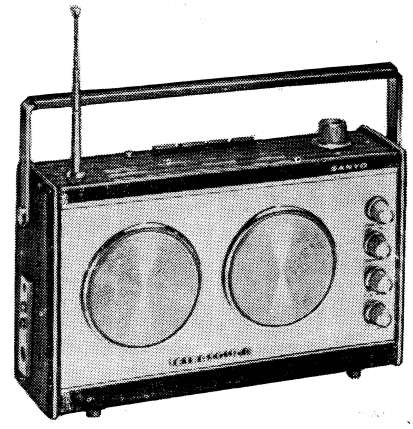

SPECIFICATIONS

Frequency Range:

M W		535−1605 Kc
SW-1		2.1−5.2 Mc
SW-2		5.9−7.7 Mc
SW-3		9.5−21.0 Mc

Intermediate Frequency: AM 455 kc

Transistors:

2SA222	Tr-1	Local oscillator
2SA222	Tr-2	Mixer
2SA101X	Tr-3	1st I. F amplifier
2SA101X	Tr-4	2nd I. F amplifier
2SB185	Tr-5	Detector
2SB185	Tr-6	Battery saver
2SB185	Tr-7	1st A. F amplifier
2SB185	Tr-8	Driver
2SB22 x 4	Tr-9~12	Para-pushpull power amplifier

Thermister: SDT-06 Temparature compensator.

Battery: 6 volt, 4 x UM-1 (size"D" flashlight batteries)

Current drain: No signal 17 mA
Maximum 290 mA

Power output: Maximum 1,000mW
Undistorted 700mW

Loudspeaker: dual 92mm permanent dynamic speaker
voice coil impedance (total 4 ohms)

Cabinet dimensions: 275mm (W) x 163mm (H) x 79mm (D)

Net weight: approx. 1.65 kg

ALIGNMENT

Sequence of Alignment	Wave Range	Dial Pointer	Signal generator		Connection High side of Signal Generator to:	Coil Adjustment	Dial Pointer	Signal Generator		Trimmer Adjustment	Indication
			Frequency	Modulation				Frequency	Modulation		
I.F.T T-3	MW	530 kc	455 kc	A.M 30%	thru. Loop antenna						Max. output
I.F.T T-2	MW	530 kc	455 kc	A.M 30%	thru. Loop antenna						Max. output
I.F.T T-1	MW	530 kc	455 kc	A.M 30%	thru. Loop antenna						Max. output
Oscillator MW	MW	600 kc	600 kc	A.M 30%	thru. Loop antenna	L-5	1400 kc	1400 kc	A.M 30%	Ct-5	Max. output
Ferrite ant.	MW	600 kc	600 kc	A.M 30%	thru. Loop antenna	L-1	1400 kc	1400 kc	A.M 30%	Ct-1	Max. output
Oscillator SW1	SW1	2.1 Mc	2.1 Mc	A.M 30%	thru. Loop antenna	L-6	5.2 Mc	5.2 Mc	A.M 30%	Ct-6	Max. output
Ferrite ant.	SW1	2.1 Mc	2.1 Mc	A.M 30%	thru. Loop antenna	L-2	5.2 Mc	5.2 Mc	A.M 30%	Ct-2	Max. output
Oscillator SW2	SW2	5.8 Mc	5.8 Mc	A.M 30%	thru. Loop antenna	L-7	7.7 Mc	7.7 Mc	A.M 30%	Ct-7	Max. output
Ferrite ant.	SW2	5.8 Mc	5.8 Mc	A.M 30%	thru. Loop antenna	L-3	7.7 Mc	7.7 Mc	A.M 30%	Ct-3	Max. output
Oscillator SW3	SW3	10.0 Mc	10.0 Mc	A.M 30%	thru. Dummy antenna	L-8	21.0 Mc	21.0 Mc	A.M 30%	Ct-8	Max. output
Ferrite ant.	SW3	10.0 Mc	10.0 Mc	A.M 30%	thru. Dummy antenna	L-4	21.0 Mc	21.0 Mc	A.M 30%	Ct-4	Max. output

Note: In case of SW-3 alignment, apply signal through dummy antenna to antenna socket.

PARTS LIST

Stock No.	Description	Q'ty
CHASSIS PROPORTION		
R=41559a	Printed circuit board	1
R=31727	Fixing	1
	incl: R=24732 Insert screw	2
R=112946	Strengthening plate	1
R=112947	Fixing metal	1
R=112959	Switch fixing metal	1
R=112949	V. C fixing metal	1
R=112955	Fixing metal	2
R=261513	Coil fixing metal	2
R=S81352a	Shaft complete	1
	incl: R=241342a Shaft	1
	R=24688 Holder	1
	R=23008 C type washer	1
R=27068	Guide shaft	1
R=24523	Nut	1
R=44065	Cushion	1
R=33226	Drum	1
R=15041	Coil spring	2
R=39026L	Pulley	1
R=24793a	Shaft	2
R=13061	C type washer	2
R=	Cushion (10 x 32 x 1t)	2
R=	Rope (0.3t 800m/m)	1
R=	Rope (0.5t 400m/m)	1
R=15096a	Coil spring	1
R=241369	Shaft	1
R=15306a	Rope supporter	2
R=27075	Pulley	2
TRANSISTORS & THERMISTER		
2SA222	Osc. Mixer	2
2SA101X	I. F amplifier	2
2SB185AA	AF. Det., Economy	4
2SB22	Power amplifier	4
SDT−06	Thermister	1
ELECTROLYTIC CONDENSER		
R=C9143	200 μF 6 v	2
R=C9136	100 μF 6 v	2
R=C9133	30 μF 3 v	2
R=C9131	5 μF 6 v	2
R=C9115	1 μF 10 v	1
R=C9116	0.5 μF 10 v	2
R=C9132	10 μF 3 v	2
ELECTRIC PARTS PROPORTION		
R=W2280a	Antenna coil (BC, SW2)	1
R=W2281	Antenna coil (SW3)	1
R=S81360	Antenna coil complete (SW1)	1
	incl: R=W2282 Antenna coil	1
	R=35256 Holder	1
R=W8215	Oscillator coil (SW1)	1
R=W8216	Oscillator coil (SW2)	1
R=W8217	Oscillator coil (SW3)	1
R=W8118b	Oscillator coil (MW)	1
R=C1128	Variable Condenser	1
R=C1074	Variable Condenser	1
R=R11667	Variable Resistor (10kc D type)	1
R=R11668	Variable Resistor (for tone)	1
R=W5T018	I. F. T 455 kc	1
R=W5T084	I. F. T 455 kc	1
R=W5T043	I. F. T 455 kc	1
or R=W5T043(2)		
R=W6257	I. P. T (19 type)	1
R=W6213	O. P. T (25 type)	1
R=R11010	Semi fixed resistor	1
R=C0056	Trimmer	2
R=C0034	Trimmer	1
or R=C0045a		
R=S6416	Speaker	1
R=S6406	Speaker	1
R=S6365	Earphone, complete	1
R=S4380	Push switch	1
R=S4379	Rotary switch	1
R=S1283	Telescopic rod antenna	1
R=S2139	Earphone socket	2
R=261193	Fine for Transistor	2
R=23552	Holder	1
R=S4169a	Push switch	1
R=S1254a(3)	Pilot lamp	1
R=S1254a(4)	Pilot lamp	1
R=25154b	Lug	2
R=S81341	Battery terminal, complete	1
	incl: R=112950 Battery case	1
	R=34185 Terminal tip	1
	R=23607 Battery terminal	2
	R=23045 Battery terminal	2
	R=25103a Coil spring	2
	R= Eyelet (2.6 x 4)	4
	R= Eyelet (3 x 4)	4
	R= Wire (0.18/6 B 200mm)	1
	R=34187 Terminal	1
R=S2155	Socket	1
R=S2154	Socket	1
R=S1155	Tip	2

Symbol No.	Description				Q'ty
RESISTORS					
R=1	56 K ohms	10 %	1/4 watt		1
R=2	33 K ohms	10 %	1/4 watt		1
R=3	1.5 K ohms	10 %	1/4 watt		1
R=4	82 ohms	10 %	1/4 watt		1
R=5	33 ohms	10 %	1/4 watt		1
R=6	1.2 K ohms	10 %	1/4 watt		1
R=7	4.7 K ohms	10 %	1/4 watt		1
R=8	18 K ohms	10 %	1/4 watt		1
R=9	8.2 K ohms	10 %	1/4 watt		1
R=10	1 K ohms	10 %	1/4 watt		1
R=11	390 ohms	10 %	1/4 watt		1
R=12	15 K ohms	10 %	1/4 watt		1
R=13	47 K ohms	10 %	1/4 watt		1
R=14	1 K ohms	10 %	1/4 watt		1
R=15	220 ohms	10 %	1/4 watt		1
R=16	220 ohms	10 %	1/4 watt		1
R=17	390 ohms	10 %	1/4 watt		1
R=18	68 K ohms	10 %	1/4 watt		1
R=19	22 K ohms	10 %	1/4 watt		1
R=20	5.6 K ohms	10 %	1/4 watt		1
R=21	2.2 K ohms	10 %	1/4 watt		1
R=22	100 ohms	10 %	1/4 watt		1
R=23	1 K ohms	10 %	1/4 watt		1
R=24	330 ohms	10 %	1/4 watt		1
R=25	12 K ohms	10 %	1/4 watt		1
R=26	56 K ohms	10 %	1/4 watt		1
R=27	820 ohms	10 %	1/4 watt		1
R=28	1.2 K ohms	10 %	1/4 watt		1
R=29	3.3 K ohms	10 %	1/4 watt		1
R=30	10 K ohms	10 %	1/4 watt		1
R=31	330 ohms	10 %	1/4 watt		1
R=32	100 ohms	10 %	1/4 watt		1
R=33	82 ohms	5 %	1/4 watt		1
R=34	1.5 K ohms	5 %	1/4 watt		1
R=35	39 K ohms	10 %	1/4 watt		1
R=36	3.3 ohms	5 %	1/4 watt		1
R=37	3.3 ohms	5 %	1/4 watt		1
R=38	22 ohms	10 %	1/4 watt		1
R=39	33 ohms	10 %	1/4 watt		1
R=40	220 K ohms	10 %	1/4 watt		1
R=41	220 K ohms	10 %	1/4 watt		1
CAPACITORS					
C−1	10 pF	10 %	50v	ceramic	1
C−2	13 pF	10 %	50v	ceramic	1
C−3	15 pF	10 %	50v	ceramic	1
C−4	60 pF	10 %	50v	maica	1
C−5	0.001 μF	20 %	50v	mylar	1
C−6	20 pF	10 %	50v	ceramic	1
C−7	900 pF	10 %	25v or 50v	styrol	1
C−8	310 pF	10 %	25v or 50v	styrol	1
C−9	4 pF	10 %	50v	ceramic	1
C−10	1200pF	10 %	25v or 50v	styrol	1
C−11	12 pF	10 %	50v	ceramic	1
C−12	60 pF	10 %	50v	maica	1
C−13	13 pF	10 %	50v	ceramic	1
C−14	7 pF	10 %	50v	ceramic	1
C−15	600 pF	10 %	25v or 50v	styrol	1
C−16	2 pF	10 %	50v	ceramic	1
C−17	0.005 μF	20 %	50v	mylar	1
C−18	0.001 μF	20 %	50v	mylar	1
C−19					
C−20	0.005 μF	20 %	50v	mylar	1
C−21	0.005 μF	20 %	50v	mylar	1
C−22	0.003 μF	20 %	50v	mylar	1
C−23	0.001 μF	20 %	50v	mylar	1
C−24	0.01 μF	20 %	50v	mylar	1
C−25	500 pF	20 %	50v	ceramic	1
C−26	0.01 μF	+80 % −20 %	50v	ceramic	1
C−27	0.04 μF	+80 % −20 %	50v	ceramic	1
C−28	0.01 μF	20 %	50v	ceramic	1
C−29					
C−30					
C−31					
C−32	0.04 μF	+80 % −20 %	50v	ceramic	1
C−33	0.02 μF	+80 % −20 %	50v	ceramic	1
C−34	4 pF	10 %	50v	ceramic	1
C−35	0.04 μF	+80 % −20 %	50v	ceramic	1
C−36	0.01 μF	20 %	50v	mylar	1
C−37	0.04 μF	+80 % −20 %	50v	ceramic	1
C−38	0.01 μF	20 %	50v	mylar	1
C−39	0.01 μF	20 %	50v	mylar	1
C−40					
C−41	0.02 μF	20 %	50v	mylar	1
C−49	200 pF	20 %	50v	ceramic	1
C−50	0.003 μF	20 %	50v	mylar	1
C−51	0.003 μF	20 %	50v	mylar	1
C−54	0.001 μF	20 %	50v	mylar	1

6-20093 Printed in Japan

MAIN PARTS LAYOUT

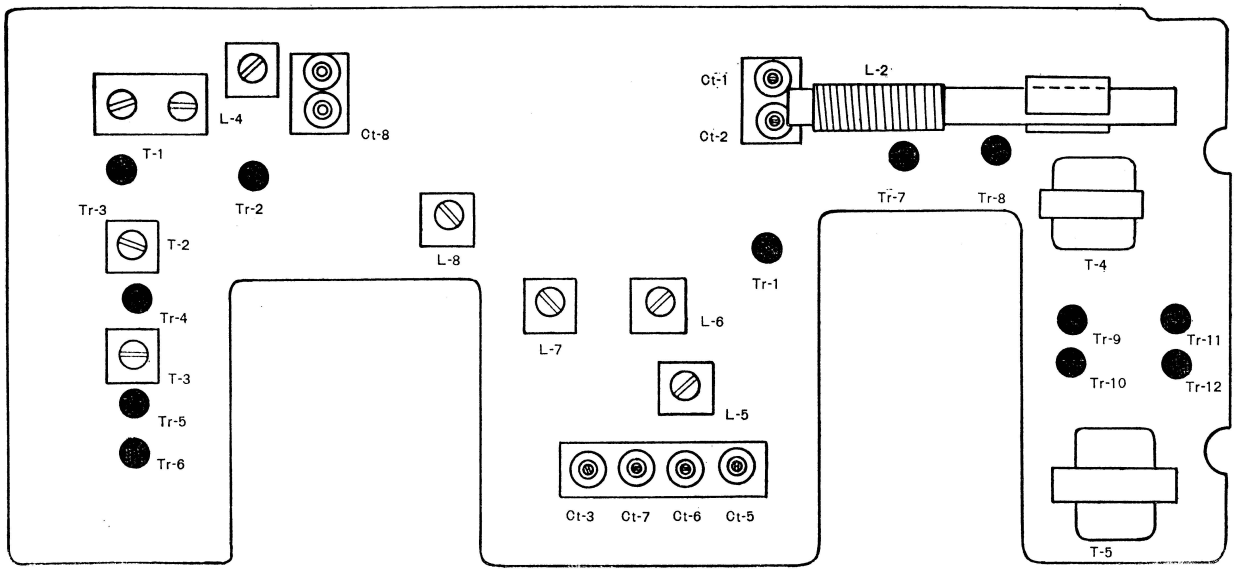

MAIN PARTS CONNECTION

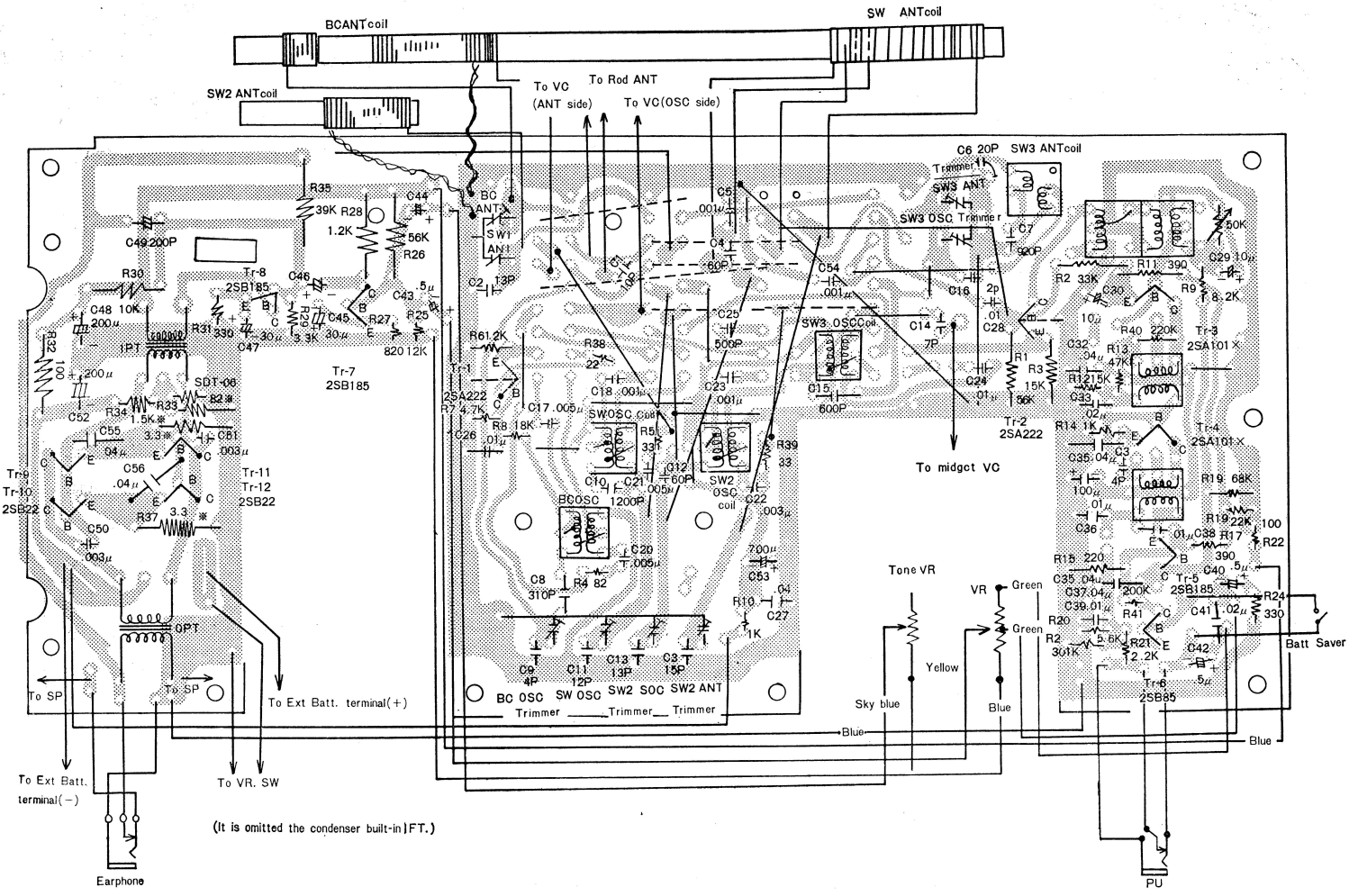

CIRCUIT DIAGRAM

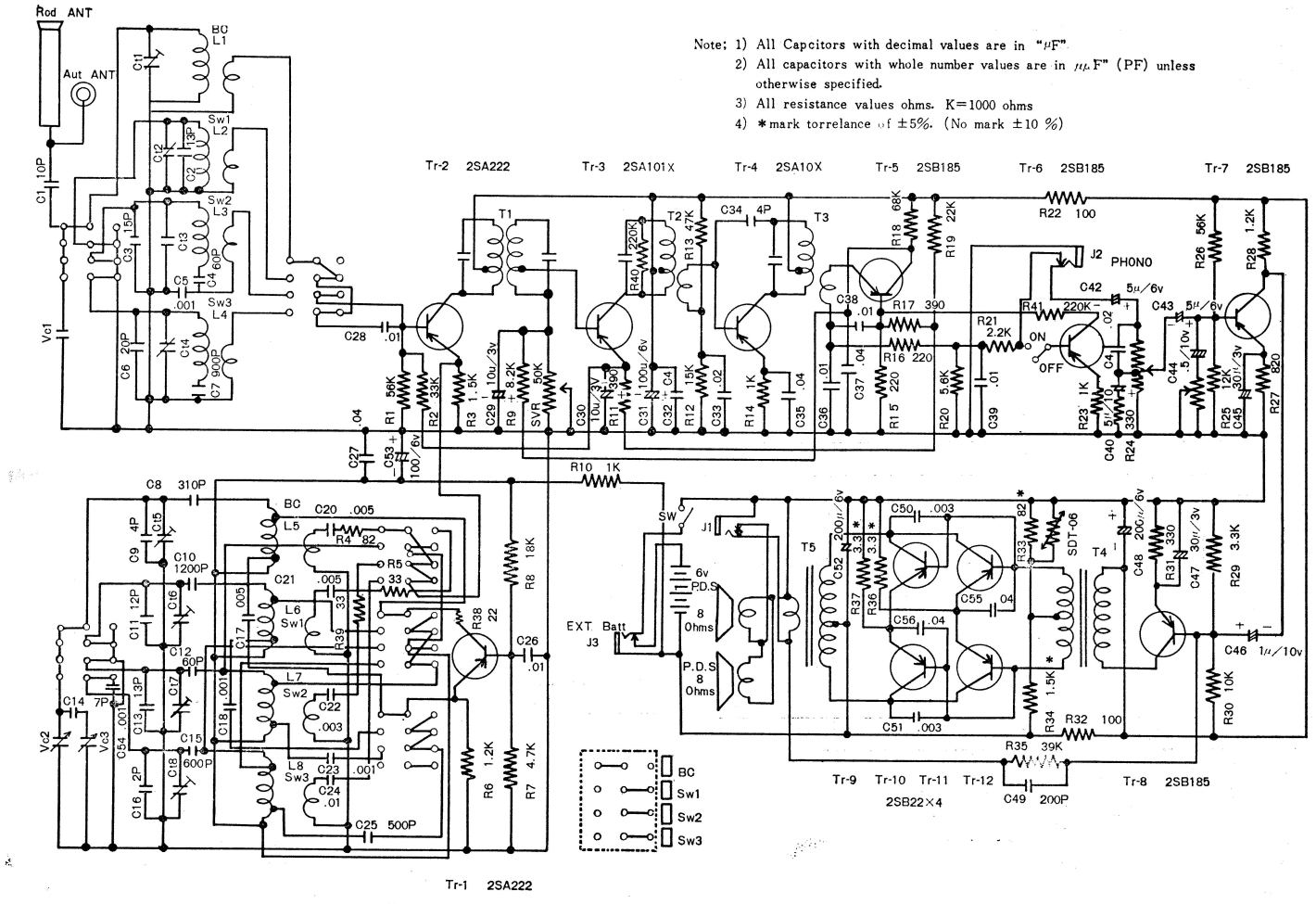

Note; 1) All Capcitors with decimal values are in "μF".
2) All capacitors with whole number values are in "μμF" (PF) unless otherwise specified.
3) All resistance values ohms. K=1000 ohms
4) * mark torrelance of ±5%. (No mark ±10 %)

PARTS LIST

Stock No.	Description	Q'ty
	CABINET PROPORTION	
R=424309a	Cabinet complete	1
	incl: R= Ribbed head screw (3 x 14)	8
	R=44155 Supporter	4
	R= Binding head screw (3 x 12)	4
	R= Finished hexagon nut (3)	4
	R=112944 Fixing metal	2
	R= Ribbed head screw (3 x 10)	4
	R= Finished hexagon nut (3)	4
	R=112960 Fixing metal	1
	R= Ribbed head screw (3 x 8)	2
	R= Finished hexagon nut (3)	2
	R= Ribbed head screw (3 x 10)	2
	R= Ribbed head screw (3 x 12)	2
R=261534a	Plate	1
R=261514	Panel	2
R=32664	Decoration	2
R=23849	Badge	1
R=	Net (220 x 110)	1
R=S81346	Handle complete	1
	incl: R=112956 Handle	1
	R=36228 Cover	1
R=241337a	Fixing metal	2
R=241338	Special washer	2
R=	Washer (0.3t 9.5φ x 6φ)	4
R=S81357	Lid complete	1
	incl: R=39382 Lid	1

Stock No.	Description	Q'ty
	CABINET PROPORTION	
	R=39267 Knob	1
	R=12152 Spring metal	1
	R= Plain washer	1
	R= Frerson recessed heab screw (2.3 x 6)	1
R=31729a	Fixing	1
R=471359	Specification	1
R=S7076	Hexagonal head cap screw	2
R=113051	Fixing metal	2
R=	Ferite core envelope (50 x 30 x 10)	1
R=S81395	Knob complete	1
	incl: R=32692 Knob	1
	R=361566 Knob decoration	1
R=S81396	Dial pointer complete	1
	incl: R=23836 Dial pointer	1
	R=23845 Slide	1
R=S81100	Knob complete	4
	incl: R=39261 Knob	4
	R=261047 Knob decoration	4
R=261535	Plate	1
R=38122	Dial	1
R=424317	Back plate	1
R=	Washer (17.5 x 11 x 1t)	4
R=	Cover (17 x 15 x 0.1t)	4
R=	Cushion (5.3 x 1t)	1