SANYO

12-transistor, 4-band Portable Radio

MODEL 12X-611

SERVICE MANUAL

SANYO ELECTRIC CO., LTD.

INTERNATIONAL DIVISION : SANYO ELECTRIC TRADING CO., LTD.
OSAKA, JAPAN

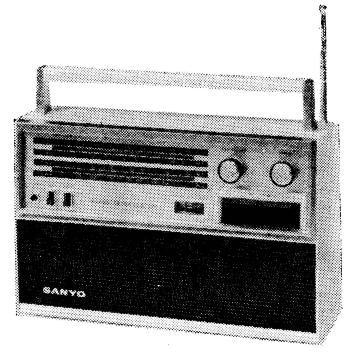

SPECIFICATIONS

FREQUENCY RANGE:	BC	535 – 1605 KC
	SW-1	1.6 – 4.5 MC
	SW-2	4.5 – 12.0 MC
	SW-3	12.0 26.0 MC
INTERMEDIATE FREQUENCY:	455 KC	
TRANSISTOR COMPLEMENT:	Tr-1	2SA223 Local oscillator
	Tr-2	2SA222 Mixer
	Tr-3	2SA322 1st I.F amplifier
	Tr-4	2SA203 2nd I.F amplifier
	Tr-5	2SB188 or 2SB24 Detector & A.G.C
	Tr-6	2SB188 or 2SB24 Audio amplifier
	Tr-7	2SB186 Audio amplifier
	Tr-8	2SB187 Driver
	Tr-9	2SB272 Power amplifier
	Tr-10	2SB272 Power amplifier
	Tr-11	2SB185 Audio pre-amplifier
	Tr-12	2SB185 Audio pre-amplifier

POWER OUTPUT:	Undistorted (10% dist.)	700 mW
	Maximum output	1000mW
SENSITIVITY (for 50mW output)	BC	100μV/m
	SW-1	70μv/m
	SW-2	70μv/m
	SW-3	31μv
POWER REQUIREMENTS:	Four 1.5 volts Monocell batteries	
CURRENT DRAIN (no signal)	13mA	
LOUDSPEAKER:	100mm permanent dynamic speaker voice coil impedance 3.3 ohms.	
DIMENSIONS:	300 W)mm×185(H)mm×90(D)mm Handle height: 45mm	
WEIGHT :	Approximately 2.4Kg (excluding batteries)	

ALIGNMENT PROCEDURES

IF & RF alignment

Apply volt-meter across the voice coil.
Volume control should be at maximum position.
Output of signal generator should be no higher than necessary to obtain proper reading in order to avoid A.G.C. function.

STEP	SIGNAL GENERATOR COUPLING	SIGNAL GENERATOR FREQUENCY	RADIO DIAL SETTING	ADJUST FOR MAX. OUTPUT
I.F Alignment				
1	Fashion loop of several turns of wire and radiate signal into loop antenna.	455 kc	left end	I. F. T 1, 2, 3
BC RF Alignment				
2	Fashion loop of several turns of wire and radiate signal into loop antenna.	515 kc	left end	BC osc coil L5
3		1650 kc	right end	BC osc trim. Ct5
4		Repeat steps 2 and 3		
5		600 kc	600 kc	BC ant coil L1
6		1400 kc	1400 kc	BC ant trim.ı Ct1
7		Repeat steps 5 and 6		
SW RF Alignment				
8	Fashion loop of several turns of wire and radiate signal into loop antenna.	1.55 Mc	left end	SW-1 osc coil L6
9		4.63 Mc	righ tend	SW-1 osc trim. Ct6
10		Repeat steps 8 and 9		
11		1.7 Mc	1.7 Mc	SW-1 ant coil L2
12		4.3 Mc	4.3 Mc	SW-1 ant trim. Ct2
13		Repeat steps 11 and 12		
SW-2 RF Alignment				
14	Fashion loop of several turns of wire and radiate signal into loop antenna.	4.36 Mc	left end	SW-2 osc coil L7
15		12.38 Mc	right end	SW-2 osc trim. Ct7
16		Repeat step 14 and 15		
17		5.0 Mc	5.0 Mc	SW-2 ant coil L3
18		11.0 Mc	11.0 Mc	SW-2 ant trim. Ct3
19		Repeat steps 17 and 18		
SW-3 RF Alignment				
20	Fashion loop of several turns of wire and radiate signal into loop antenna.	11.61 Mc	left end	SW-3 osc coil L8
21		26.83 Mc	right end	SW-3 osc trim. Ct8
22		Repeat steps 20 and 21		
23		13.0 Mc	13.0 Mc	SW-3 ant coil L4
24		25.0 Mc	25.0 Mc	SW-3 ant trim. Ct4

SYMBOL No.	STOCK No.	DESCRIPTION
Coils		
L1, L2	R-S8378e	Antenna coil complete (for BC and SW-1)
L3	R-S8381e	Antenna coil complete (for SW-2)
L4	R-W2120	Antenna coil (for SW-3)
L5	R-W8118b	Oscillator coil (for BC)
L7	R-W8169a	Oscillator coil (for SW-2)
L8	R-W8062	Oscillator coil (for SW-3)
L6	R-W8060 or R-W8167	Oscillator coil (for SW-1)
Controls		
	R-C1029a	Variable capacitor (PVC-2JT)
	R-C0024	Trimmer
	R-R11648	Variable resistor
	R-R11010	Semi-Fixed resistor
Loudspeaker		
	R-S6144	Loudspeaker, voice coil impedance 3.3 ohms.
Transistors		
Tr-1	2SA223	Local oscillator
Tr-2	2SA222	Mixer
Tr-3	2SA322	1st I.F amplifier
Tr-4	2SA203	2nd I.F amplifier
Tr-5	2SB188 or 2SB24	Detector & A. G. C
Tr-6	2SB188 or 2SB24	Audio amplifier
Tr-7	2SB186	Audio amplifier
Tr-8	2SB187	Driver
Tr-9	2SB272	Power amplifier
Tr-10	2SB272	Power amplifier
Tr-11	2SB185	Audio pre-amplifier
Tr-12	2SB185	Audio pre-amplifier

SYMBOL No.	DESCRIPTION			
Electrolytc Capacitors				
C-6	R-C9079	10μF	3v	
C-9	P-C9080	30μF	3v	
C-14	R-C9080	30μF	3v	
C-16	R-C9079	10μF	3v	
C-19	R-C9079	10μF	3v	
C-20	R-C9082a	100μF	6v	
C-21	R-C9086a	120μF	6v	
C-22	R-C9140	0.3μF	10v	
C-23	R-C9080	30μF	3v	
C-24	R-C9077a	200μF	6v	
C-27	R-C9086a	120μF	6v	
C-28	R-C9086a	120μF	6v	
C-48	R-C9080	30μF	3v	
C-49	R-C9120	0.2μF	10v	
Resistors				
R-1	39 ohm	±10%	¼w	carbon film
R-2	56K ohm	±10%	¼w	〃 〃
R-3	1.5K ohm	±10%	¼w	〃 〃
R-4	33K ohm	±10%	¼w	〃 〃
R-5	8.2K ohm	±20%	½w	solid
R-6	390 ohm	±10%	¼w	carbon film
R-7	68K ohm	±10%	¼w or ½w	〃 solid
R-8	10K ohm	±10%	¼w	carbon
R-9	1K ohm	±10%	¼w	〃
R-10	68 ohm	±10%	¼w	〃 or solid
	〃	〃	½w	〃 〃
R-11	220 ohm	±10%	¼w	carbon
R-12	220 ohm	±10%	¼w	〃
R-13	22K ohm	±10%	¼w	〃
R-14	390 ohm	±10%	¼w	〃
R-15	5.6K ohm	±10%	¼w	〃
R-16	3.3K ohm	±10%	¼w	〃
R-17	27K ohm	±10%	¼w	〃
R-18	5.6K ohm	±10%	¼w	〃
R-19	1.5K ohm	±10%	¼w	〃
R-20	100 ohm	±20%	½w	〃
R-21	2.2K ohm	±10%	¼w	〃
R-22	560 ohm	±10%	¼w	〃
R-23	27 ohm	±10%	¼w	〃
R-24	10K ohm	±10%	¼w	〃
R-25	3.3K ohm	±10%	¼w	〃
R-26	470 ohm	±10%	¼w	〃
R-27	22 ohm	±10%	¼w	〃
R-28	100 ohm	±20%	¼w	〃
R-29	1.5K ohm	± 5%	¼w	〃
R-30	56 ohm	±10%	¼w	〃
R-31	470 ohm	±10%	¼w	〃
R-32	2.2 ohm	±10%	¼w	〃
R-33	330 ohm	±10%	¼w	〃
R-34	4.7K ohm	±10%	¼w	〃
R-35	15K ohm	±10%	¼w	〃
R-36	1.2K ohm	±10%	¼w	〃
R-37	82 ohm	±10%	¼w	〃
R-39	330K ohm	±10%	¼w	〃
R-40	6.8K ohm	±10%	¼w	〃
R-41	6.8K ohm	±10%	¼w	〃
R-42	10K ohm	±10%	¼w	〃
R-43	8.2K ohm	±10%	¼w	〃
R-44	1.2K ohm	±10%	¼w	〃
R-45	470K ohm	±10%	¼w	〃
R-46	68 ohm	±10%	¼w	〃
Fixed Capacitors				
C-3	Ceramic	50 pF	±10%	50wv
C-4	Mylar	0.01 μF	±20%	50wv
C-5	〃	0.04 μF	±20%	50wv
C-7	Ceramic	3 pF	±0.5 pF	50wv
C-8	Mylar	0.01 μF	±20%	50wv
C-10	Ceramic	10 pF	±10%	50wv
C-11	〃	0.05 μF	+80%−20%	10wv
C-12	〃	0.05 μF	+80%−20%	10wv
C-13	Mylar	0.01 μF	±20%	50wv
C-15	〃	0.01 μF	±20%	50wv
C-25	〃	0.0075 μF	±20%	50wv
C-26	〃	0.075 μF	±20%	50wv
C-29	〃	0.01 μF	±20%	50wv
C-30	〃	0.005 μF	±20%	50wv
C-31	〃	0.005 μF	±20%	50wv
C-32	〃	0.001 μF	±20%	50wv
C-33	〃	0.002 μF	±20%	50wv
C-34	〃	0.01 μF	±20%	50wv
C-35	〃	0.001 μF	±20%	50wv
C-36	〃	0.01 μF	±20%	50wv
C-37	Ceramic or	250 pF	±10%	500wv or
〃	(Mica) Mineral	〃	〃	50wv
C-38	Stycon or	330 pF	±10%	125wv or
〃	(Mica) Mineral	〃	〃	50wv
C-39	Stycon or	900 pF	±10%	50wv or
〃	(Mica) Mineral	〃	〃	〃
C-40	Stycon	2500 pF	±10%	35wv
C-41	〃	7700 pF	±10%	125wv
C-42	Mylar	0.04 pF	±20%	50wv
C-43	Ceramic	5 pF	±0.5 pF	50wv
C-44	〃	20 pF	±10%	50wv
C-45	〃	5 pF	±0.5 pF	50wv
C-46	〃	10 pF	±10%	50wv

6-20021 Printed in Japan

CIRCUIT DIAGRAM

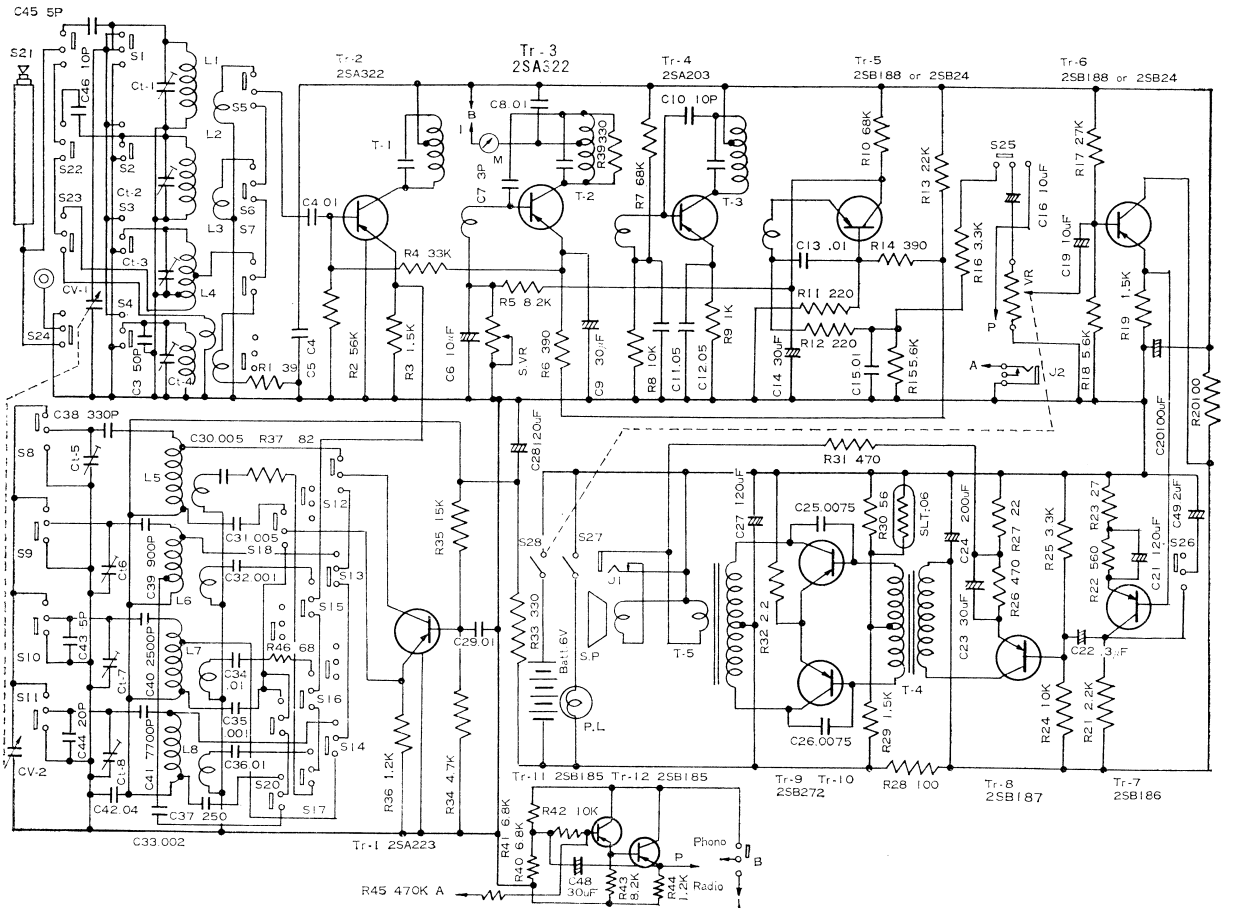

MAIN PART CONNECTION

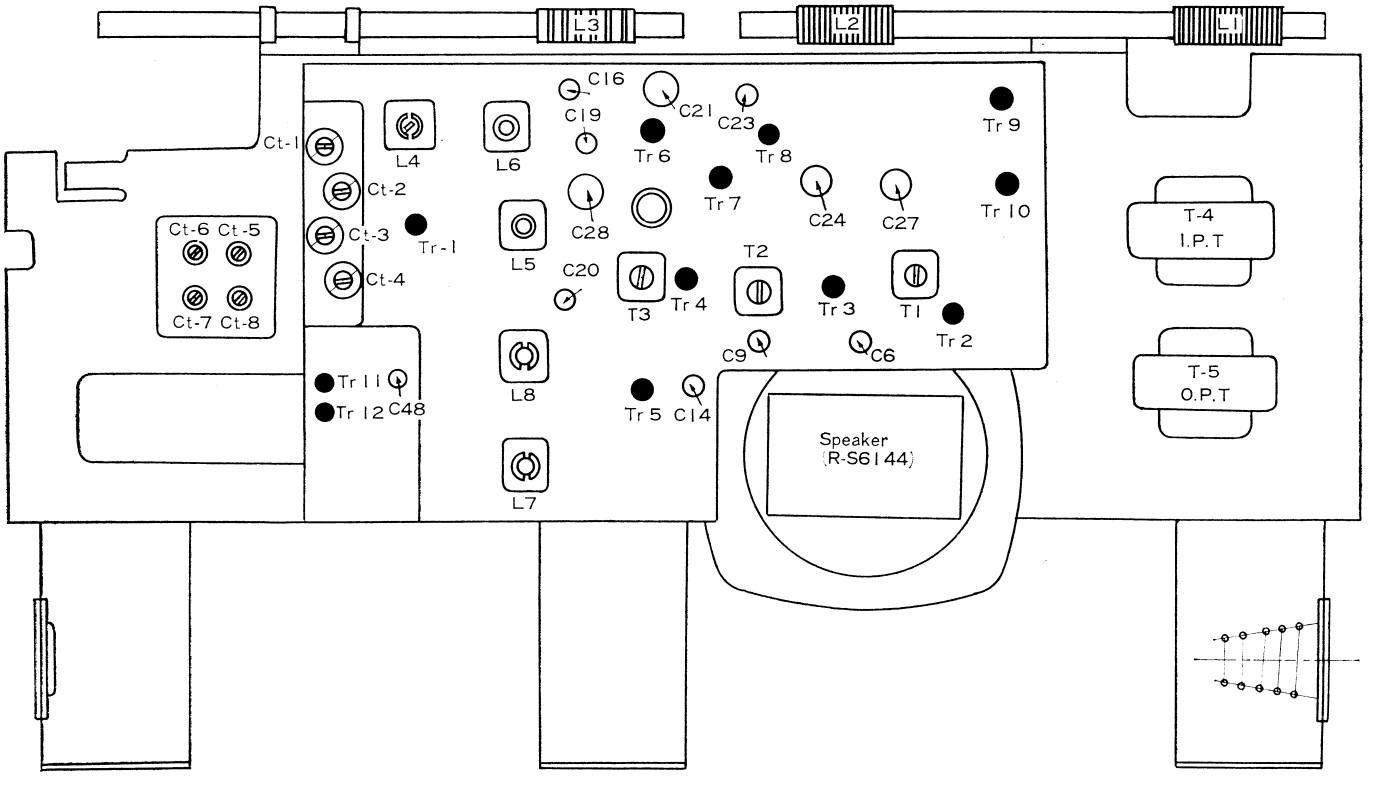

MAIN PARTS LOCATION

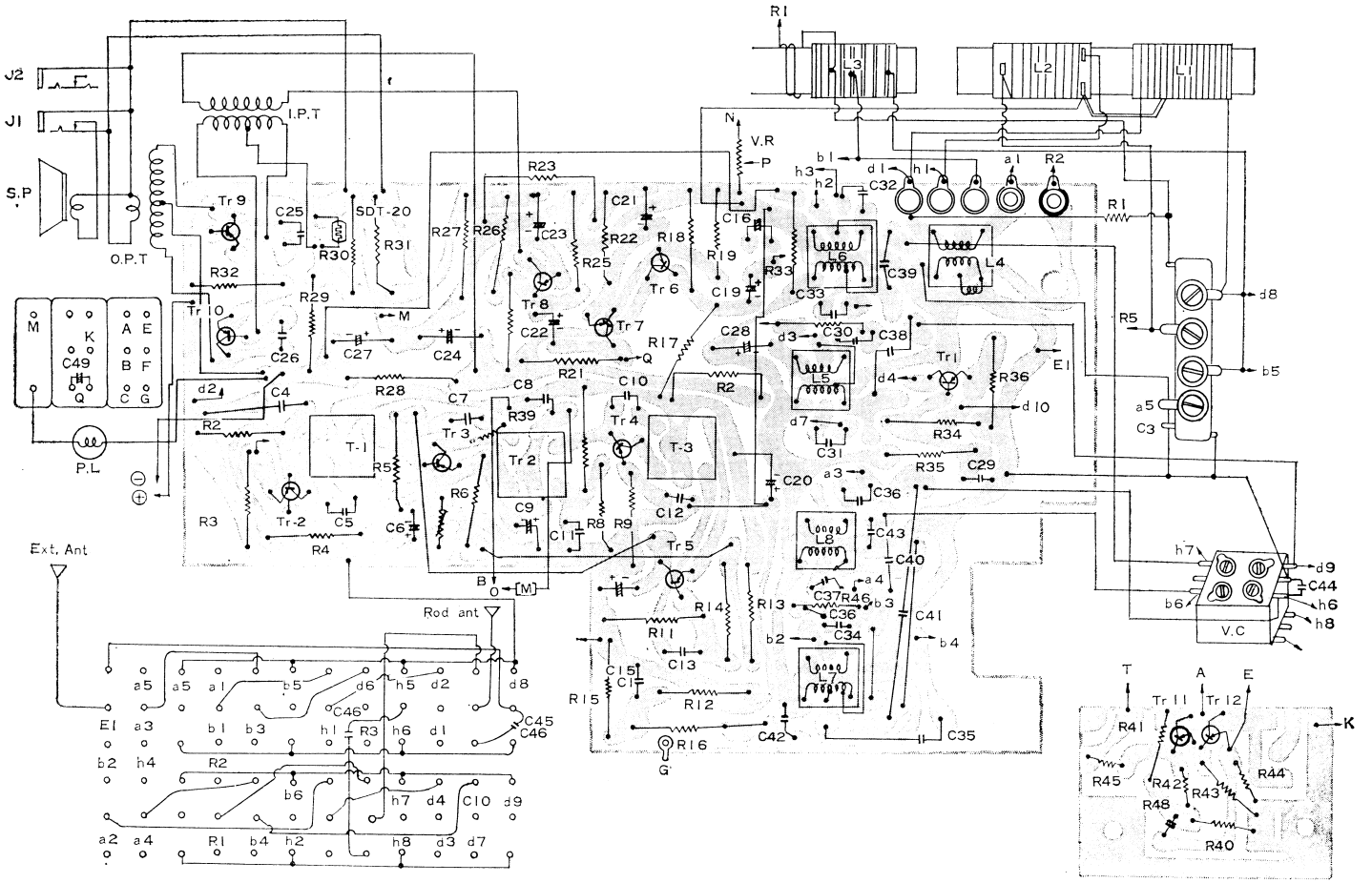

PARTS LIST

SYMBOL No.	STOCK No.	DESCRIPTIONS
Cabinet & Miscellaneous		
	R-31638a	Cabinet complete
	R-31639	Back cover
	R-31640	Panel
	R-28099a	Decoration metal (Dial frame)
	R-261181	Indication plate(BC, SW 1, SW2 ,SW3)
	R-261182a	Decoration metal (silver line)
	P-27032	Badge (SANYO)
	R-261183	Instruction sheet
	R-261186	Back plate
	R-24031b	Fixing screw for back cover
	R-	Speaker net (Himelon net)
	R-39257a	Dial cover (hot stamped plastic)
	R-261220	Sash (Aluminium sash for indicator)
	R-112502	Auxiliary metal
	R-47274	Battery instruction sheet
	R-	Cushion 10×8×12
	R-111434b	Switch fixing metal
	R-111435	Cover
	R-112437a	Switch fixing metal (for Tone, Phono, PL switch)
	R-112338a	Volume fixing metal
	R-39026L	Double pulley
	R-24384	Double pulley shaft
	R-S8321a	Dial shaft
	R-112439	Pilot lamp fixing metal
	R-34004	Pulley
	R-24002	Pulley shaft
	R-24232	Guide shaft
	R-33226	Drum
	R-44046	Cushion
	R-15041	Coil spring
	R-15131	Coil spring
	R-44158	Ring for Antenna coil fixing
	R-24632	Stud

SYMBOL No.	STOCK No.	DESCRIPTION
	R-112468	Battery holder fixing metal
	R-	Insulation paper (black fiber)
	R-S81078a	Handle complete
	R-S81079	Pointer complete
	R-11747	Speaker fixing metal cap
	R-24700	Stud
	R-S81080	Knob complete
	R-14173	Stud (6ϕ)
	R-S8380a	Push-button switch complete
	R-S4106	Slide switch (for Tone, Phono)
	R-S2081a	Socket (for Earphone, Phono)
	R-S4169a	Push button switch (for Pilot lamp)
	R-S3008	Lug
	R-23275	Eyelet lug
	R-S1252	Telescopic antenna
	R-S2025b	Socket (for Ext. antenna)
	R-23204L	Lug (for socket)
	R-24372	Tip (for telescopic antenna connection)
	R-25154b	Lug(for telescopic antenna connection)
	R-S8614(1)	Plug complete
	R-S81095	Battery terminal complete
	R-23552	Radiator connection tip
	R-S5530	Meter
	R-S1107a or R-S1254	Pilot lamp

Transformer

T-1	R-W5T008	1st I.F.T	(455 kc)
T-2	R-W5T039	2nd I.F.T	(455 kc)
T-3	R-W5T060	3rd I.F.T	(455 kc)
T-4	R-W6121(2) or R-W6273	Input Transformer (I.P.T)	
T-5	R-W6214a or R-W6274	Output Transformer (O.P.T)	