PHILIPS Service notes

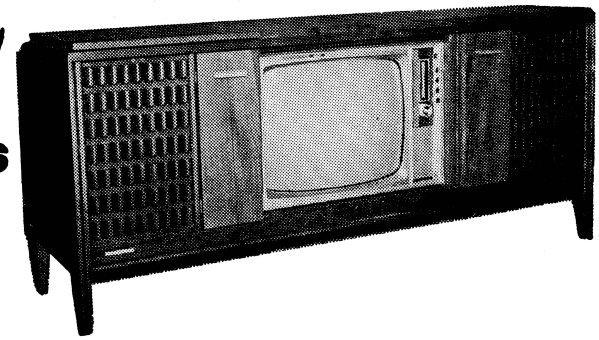

MODEL 11630
Emperor

NOTE: This receiver is a combination of several units. For servicing information on the television unit refer to service data for Model 11624. Servicing information on the balance of the units is given in this publication. Particularly notice the drawing giving details of the interconnection of the television unit to the remainder of the combination.

SPECIFICATIONS

Power supply	200-255V, 50 Hz
Power consumption	170W
Tuning ranges (radio)	
B.C.	520-1620kHz
S.W.1.	10-26.7MHz
S.W.2.	3.85-10.2MHz
Intermediate frequency (radio)	455kHz
Record changer	Philips AG1035
Pick-up head	Philips AG3228
Lamps (radio)	
2 dial scale, 1 rec. ch. compt.	8045D
1 warning	8008D
3 band tuner	UT1
Modules	1 x UF404
	2 x UA601
Television receiver	see 11624 data

ACCESS FOR SERVICE

From through the bottom of the cabinet, remove two wing screws from bottom of R.H. baffle. Push baffle out at bottom and then slide down from top to remove. Unclip speaker lead. Remove control knobs and the two dial escutcheon securing bushes and lift off escutcheon. Disconnect all plugs and sockets from chassis including the S.W. aerial lead. Turn aerial rod parallel to the chassis. Remove the two chassis mounting screws from the top of the chassis. The chassis may now be lifted out from the top of the cabinet.

By unclipping leads from the interior of the cabinet and passing them through the baffle opening and reconnecting up the chassis (S.W. aerial connection must be made separately), the receiver may be operated in front of the cabinet for service purposes.

UA601 CURRENT CONSUMPTION

Under no signal conditions, the total current consumption of UA601 module is in accordance with the following temperature/current table.

Temp. °F	64	72	79	86	93	100	108	115	Tol.
Collector current, mA.	6.0	6.3	7.0	8.0	9.3	11.0	12.8	15.0	±1mA.
Total current, mA.	28	28.5	29	30	32	34	36	39	±10%

ROD AERIAL ADJUSTMENT

Removal of the tuning knob reveals a slotted spindle in the centre of the tuning spindle. This spindle can be rotated for optimum positioning of the rod aerial assembly.

UT1 CURRENT CONSUMPTION

With the wave range switch at BC, the total current consumption of UT1 plus UF404 is 6.6mA ± 1mA.

ALIGNMENT

I.F. Aligment

Signal generator is coupled through the normal I.F. dummy to capacitor C2. Peak cores at the specified frequencies in the following order.

1st I.F.T. primary	456 kHz
1st I.F.T. secondary	454 kHz
2nd. I.F.T. primary	457 kHz
2nd I.F.T. secondary	453 kHz
3rd I.F.T.	455 kHz

R.F. Alignment

On B/C band, the signal generator is coupled via a turn of wire around the rod aerial assembly. On S/W bands, the generator is coupled to the aerial wire, via the normal dummy aerial.

Oscillator circuits are trimmed at tuning capacitor fully open and fully closed positions. Aerial circuits are trimmed at the frequencies quoted. Procedure is detailed in the following table.

Check that with tuning capacitor fully closed, dial cursor is in line with the stop marks of the dial scale.

Waveband	Circuit	Freq.	Trim for max. output.
B.C.	osc.	520 kHz	L406, L407
	osc.	1620 kHz	C413
	aer.	600 kHz	L401, L402
	aer.	1500 kHz	C404
S.W.1.	osc.	10 MHz	L408, L409
	osc.	26.7 MHz	C414
	aer.	10.82 MHz	L403
	aer.	23.8 MHz	C405
S.W.2.	osc.	3.85 MHz	L410, L411
	osc.	10.2 MHz	C415
	aer.	4.18 MHz	L404
	aer.	9.21 MHz	C406

August, 1967

Published by PHILIPS ELECTRICAL PTY. LTD., Australia
Sydney, Melbourne, Brisbane, Adelaide, Perth

11630

| | | |

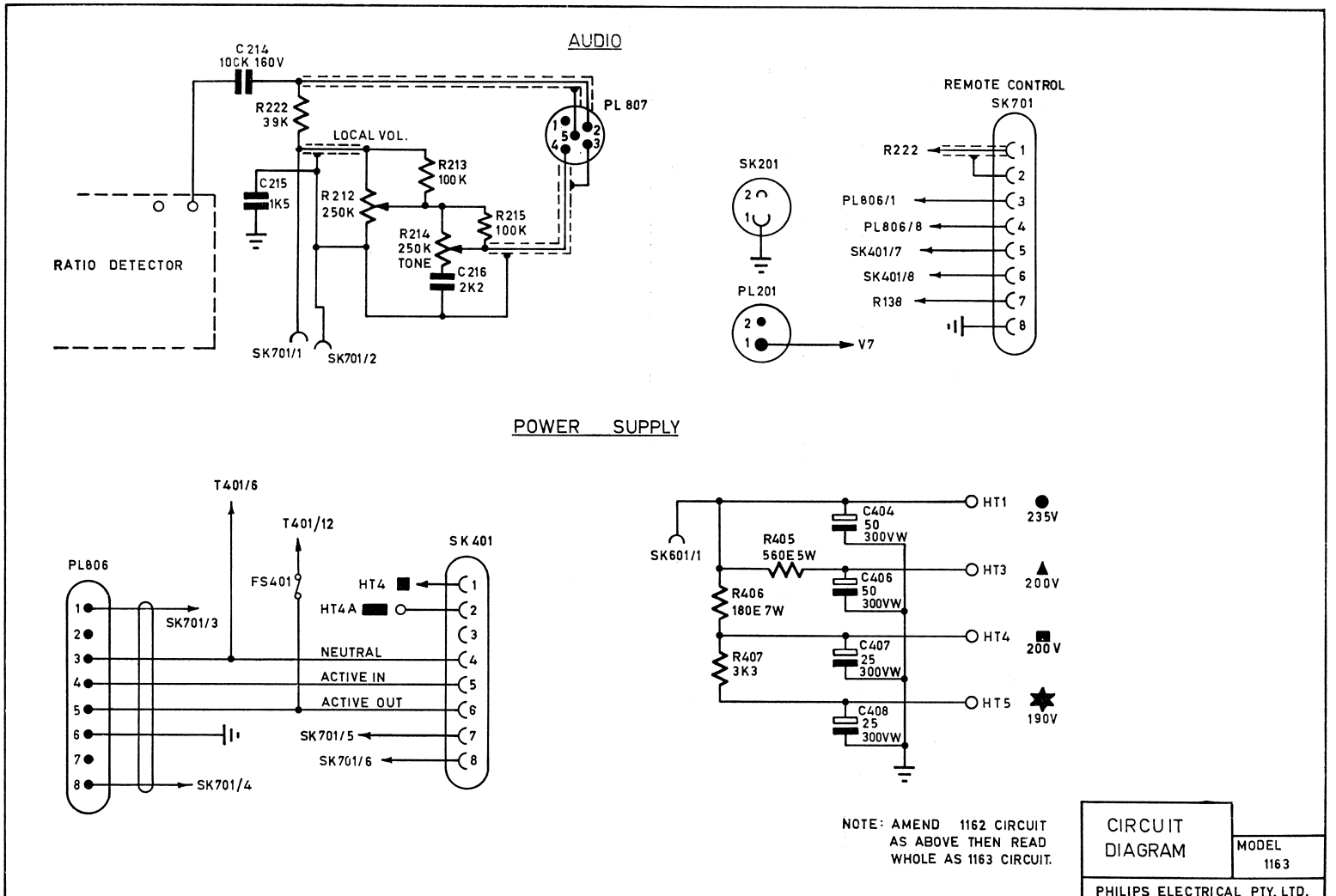
AUDIO
C214
10CK 160V
R222
39K
LOCAL VOL.
PL 807
R213
100K
C215
1K5
R212
250K
R215
100K
R214
250K
TONE
C216
2K2
RATIO DETECTOR
SK701/1
SK701/2
SK201
PL201
V7
REMOTE CONTROL
SK701
R222
PL806/1
PL806/8
SK401/7
SK401/8
R138
POWER SUPPLY
T401/6
T401/12
PL806
FS401
SK401
HT4
HT4A
SK701/3
NEUTRAL
ACTIVE IN
ACTIVE OUT
SK701/5
SK701/6
SK701/4
SK601/1
R405
560E 5W
R406
180E 7W
R407
3K3
C404
50
300VW
C406
50
300VW
C407
25
300VW
C408
25
300VW
HT1
HT3
HT4
HT5
235V
200V
200V
190V
NOTE: AMEND 1162 CIRCUIT
AS ABOVE THEN READ
WHOLE AS 1163 CIRCUIT.
CIRCUIT
DIAGRAM
MODEL
1163
PHILIPS ELECTRICAL PTY. LTD.

11630

11630

MECHANICAL PARTS LIST

Description	Code No.
Bearing—front (D/W tuner)	CS.382.711
Bearing—rear (D/W tuner)	CS.382.712
Cabinet back—TV	CS.460.846
Clip for above, 4x	CS.282.511
Catch-door (magnetic), 4x	CS.281.006
Cover assy. for mic. socket	CR.572.315
Cover assy. for tape socket	CR.572.314
Dial cord 45" required	965/JB1
Dial cord spring	CS.200.085
Dial cursor assy.	CR.480.707
Dial drum (D/W tuner)	CS.359.819
Dial scale	CS.412.041
Dial scale support block, 2x	CS.219.166
Escutcheon—dial	CS.430.190
Frame/mask assy.—TV	CR.304.654
Function strip—TV	CS.430.798
Handle—door, 2x	CS.432.209
Insulator—stand off (D/W tuner) 4x	C.309.ZZ/01
Knob—control, 7x	CR.524.524
Lampholder assy., 4x	A3.311.15
Nameplate—"Magnascope"	CS.438.375
Nut for dial escutcheon mounting, 2x	CS.274.426
Plug—octal (power for TV chassis)	CZ.365.436 Teletron PS18
Plug—4 pin, 2x (pick-up & cabinet lamps)	CZ.365.320 McMurdo B4CP
Plug—5 pin, 3x (audio from T.V., speakers, input panel)	CZ.365.322 McMurdo B5CP
Plug—2 pin (changer power)	CZ.365.142 McMurdo B2/PP
Roller assy.—indexing (D/W tuner)	A3.686.39
Rotor assy. (D/W tuner)	CR.247.222
Screw—grub, 2x (D/W tuner)	A3.714.73
Socket—octal (power for TV chassis)	CZ.369.703 C/F733-2-11
Socket—4 pin, 2x (pick-up & cabinet lamps)	CZ.370.512 McMurdo 4QMS/C
Socket—5 pin, 3x (audio from TV, speakers, input panel)	CZ.370.513 McMurdo 5QMS/C
Socket—2 pin (changer power)	CZ.370.144 McMurdo 2QMP/AU
Socket—5 pin, 2x (mic., tape)	979/5x180
Spring—indexing roller (D/W tuner)	CS.200.084
Stator assy. (D/W tuner)	CR.100.213
Stay assy.—flap, 2x	CR.285.819
Switch—function	CZ.202.401
Tuning spindle assy.	CR.371.247
Wafer assy.—coil mtg. (D/W tuner)	CR.244.408
Workmark—"Philips"	CS.436.580

ELECTRICAL PARTS LISTS

CAPACITORS

C. No.	Description	V.W.	Tol. ±%	Type or Code No.
2	4K7 ceramic	25	+80-20	Ducon CDR
3	22K ceramic	25	+80-20	Ducon CDR
4	47K ceramic	25	+80-20	Ducon CDR
5	3K6 Styroflex	100	5	C.285.AA/B3K6
6	part of 1st I.F.T.			
7	47K ceramic	25	+80-20	Ducon CDR
8	47K ceramic	25	+80-20	Ducon CDR
9	part of 2nd I.F.T.			
10	part of 2nd I.F.T.			
11	47K ceramic	25	+80-20	Ducon CDR
12	47K ceramic	25	+80-20	Ducon CDR
13	47K flat foil	250	20	C.280.AE/P47K
14	part of 3rd I.F.T.			
15	8M electrolytic	4		C.426.AS/B8
16	3K3 ceramic	500	+50-20	C.322.BA/H3K3
17	47K ceramic	25	+80-20	Ducon CDR
18	3K3 ceramic	500	+50-20	C.322.BA/H3K3
19	10M elctrolytic	16		C.426.AR/E10
101	640K electrolytic	64		C.426.AS/HO.64
102	40M electrolytic	16		C.426.AR/E40
103	32M electrolytic	10		C.426.AR/D32
104	80M electrolytic	25		C.426.AR/F80
105	1G electrolytic	16		C.437.CB/E1000
106	80M electrolytic	2.5		C.426.AR/A80
201	4K7 Polyester	400	10	C.296.AC/A4K7
202	2M5 electrolytic	16		C.426.AS/E2.5
203	32M electrolytic	4		C.426.AR/B32
204	80M electrolytic	2.5		C.426.AR/A80
205	10M electrolytic	16		C.426.AR/E10
206	100K Polyester	160	10	C.296.AA/A100K
207	2M5 electrolytic	16		C.426.AS/E2.5
301	200M electrolytic	10		C.426.AR/D200
305	2G electrolytic	35		CZ.100.151
306	2G electrolytic	35		Ducon ET6E
310	82E ceramic, N.P.O.	500	10	C.304.GB/A82E
311	82E ceramic, N.P.O.	500	10	C.304.GB/A82E
312	33K Polyester	160	10	C.296.AA/A33K
313	33K Polyester	160	10	C.296.AA/A33K
314	56E ceramic, N.P.O.	500	10	C.304.GB/A56E
315	56E ceramic, N.P.O.	500	10	C.304.GB/A56E
317	125M electrolytic	16		C.426.AR/E125
318	6K8 Polyester	400	10	C.296.AC/A6K8
319	6K8 Polyester	400	10	C.296.AC/A6K8
320	18K Polyester	160	10	C.296.AA/A18K
321	18K Polyester	160	10	C.296.AA/A18K
322	4K7 Polyester	400	10	C.296.AC/A4K7
323	4K7 Polyester	400	10	C.296.AC/A4K7
324	82K Polyester	160	10	C.296.AA/A82K
325	82K Polyester	160	10	C.296.AA/A82K
327	20M electrolytic	16		C.426.AR/E20
328	20M electrolytic	16		C.426.AR/E20
329	10M electrolytic	2.5		C.426.AS/A10
330	10M electrolytic	2.5		C.426.AS/A10
401	100E ceramic, N.P.O.	500	5	C.304.GB/B100E
402	10E ceramic, N750	500	0.5pF	C.304.GH/L10E
403	10E ceramic, N750	500	0.5pF	C.304.GH/L10E
404	20E foil trimmer			C.010.EA/20E
405	20E foil trimmer			C.010.EA/20E
406	20E foil trimmer			C.010.EA/20E
408	425E mica	500	1	Ducon MS
409	Tuning capacitor			49.002.67
410				
411	33E ceramic, N750	500	5	C.304.GH/B33E
413	20E foil trimmer			C.010.EA/20E
414	20E foil trimmer			C.010.EA/20E
415	20E foil trimmer			C.010.EA/20E
417	47K Polyester	160	10	C.296.AA/A47K
418	10K Polyester	160	10	C.296.AA/A10K
419	620E Styroseal	100	2	Ducon DFB
420	470E ceramic, N750	500	2	C.304.GH/C470E
421	430E Styroseal	100	2	Ducon DFB
423	470E Styroseal	100	10	Ducon DFB
424	5E6 ceramic, N1500	500	0.5pF	Ducon CDS
425	4K7 Styroseal	100	10	Ducon DFB
426	8E2 ceramic, N2200	500	0.5pF	Ducon CDS
	Capacitor variations for TV			
143	35K ceramic	2000	+80-20	Ducon CDD/H

RESISTORS

R. No.	Description	W.	Tol. ±%	Type or Code No.
4	3K3 cracked carbon	⅛	10	B8.031.04NB/A3K3
5	IK2 cracked carbon	⅛	10	B8.031.04NB/A1K2
6	10E cracked carbon	½	10	B8.305.05A/10E
7	18K cracked carbon	⅛	10	B8.031.04NB/A18K
8	15K cracked carbon	⅛	10	B8.031.04NB/A15K
9	82K cracked carbon	⅛	10	B8.031.04NB/A82K
10	1K2 cracked carbon	⅛	10	B8.031.04NB/A1K2
11	18K cracked carbon	⅛	10	B8.031.04NB/A18K
12	82K cracked carbon	⅛	10	B8.031.04NB/A82K
13	560E cracked carbon	⅛	10	B8.031.04NB/A560E
14	1K5 cracked carbon	⅛	10	B8.031.04NB/A1K5
15	12K cracked carbon	⅛	10	B8.031.04NB/A12K
16	10K cracked carbon	⅛	10	B8.031.04NB/A10K
17	1K cracked carbon	⅛	10	B8.031.04NB/A1K
18	18K cracked carbon	⅛	10	B8.031.04NB/A18K
101	82K carbon	½	10	IRC BTS
102	82K carbon	½	10	IRC BTS
103	82E cracked carbon	½	10	B8.305.05A/82E
104	2K7 carbon	½	10	IRC BTS
105	3K3 carbon	½	10	IRC BTS
106	270E carbon	½	10	IRC BTS
107	8E N.T.C. disc	1	10	E.201.BC/A8E
108	100E carbon	½	10	IRC BTS
109	22E carbon	½	10	IRC BTS
110	E68 wire wound	½	10	IRC BW½
111	E68 wire wound	½	10	IRC BW½
112	47K carbon	½	10	IRC BTS
113	2E2 metal oxide	¼	5	E.017.BC/B2E2
114	120E carbon	½	10	IRC BTS
201	1M carbon	½	10	IRC BTS
202	180K carbon	½	10	IRC BTS
203	100K carbon	½	10	IRC BTS
204	18K carbon	½	10	IRC BTS
205	1K carbon	½	10	IRC BTS
206	47K carbon	½	10	IRC BTS
207	4K7 carbon	½	10	IRC BTS
209	470E carbon	½	10	IRC BTS
210	10K carbon	½	10	IRC BTS
211	4K7 carbon	½	10	IRC BTS
301	4E7 wire wound	2	10	IRC XW2
303	1K carbon	½	10	IRC BTS
304	100K cracked carbon	½	10	B8.305.05A/100K
305	100K cracked carbon	½	10	B8.305.05A/100K
310	270K cracked carbon	½	10	B8.305.05A/270K
311	270K cracked carbon	½	10	B8.305.05A/270K
312	22K carbon	½	10	IRC BTS
313	100K carbon	½	10	IRC BTS
314	180K cracked carbon	½	10	B8.305.05A/180K
315	180K cracked carbon	½	10	B8.305.05A/180K
316	1M8 cracked carbon	½	10	B8.305.05A/1M8
317	1M8 cracked carbon	½	10	B8.305.05A/1M8
318	10K carbon	½	10	IRC BTS
319	10K carbon	½	10	IRC BTS
320	2x1M carbon potentio-			CZ.034.147
321	meter, taper C, tapped			dual ganged
	40K (volume)			IRC series 45
322	180K cracked carbon	½	10	B8.305.05A/180K
323	180K cracked carbon	½	10	B8.305.05A/180K
324	82K carbon	½	10	IRC BTS
325	82K carbon	½	10	IRC BTS
326	3M carbon potentio-			CZ.029.615
	meter, taper A, (balance)			IRC series 45.
328	2K2 carbon	½	10	IRC BTS
329	2x50K carbon potentio-			CZ.034.148
330	meter, taper A			dual ganged
	(treble)			IRC series 45.
331	6K8 carbon	½	10	IRC BTS
332	6K8 carbon	½	10	IRC BTS
333	5K6 carbon	½	10	IRC BTS
334	5K6 carbon	½	10	IRC BTS
335	2x50K carbon potentio-			CZ.034.148 dual
336	meter, taper A, (bass)			ganged IRC series
				45.
337	820E carbon	½	10	IRC BTS
338	820E carbon	½	10	IRC BTS
339	3K9 carbon	½	10	IRC BTS
340	3K9 carbon	½	10	IRC BTS

RESISTORS

R. No.	Description	W.	Tol. ±%	Type or Code No.
346	27K carbon	½	10	IRC BTS
347	4K7 carbon	½	10	IRC BTS
348	27E carbon	1	10	IRC BTA
401	22E cracked carbon	½	10	B8.305.05A/22E
402	68E cracked carbon	½	10	B8.305.05A/68E
404	470E cracked carbon	½	10	B8.305.05A/470E
405	220E cracked carbon	½	10	B8.305.05A/220E
407	39K carbon	½	10	IRC BTS
408	15K carbon	½	10	IRC BTS
409	10E cracked carbon	½	10	B8.305.05A/10E
410	1K5 carbon	½	10	IRC BTS
411	6K8 cracked carbon	½	10	B8.305.05A/6K8
	Resistor variations for T.V.			
212	250K carbon potentio-			CZ.034.146
	meter, taper C, (volume)			IRC series 45.
222	39K carbon	½	10	IRC BTS

INDUCTORS

L. No.	Description	Code No.
1, 2	Primary & coupling, 1st I.F.T.	CZ.651.000
3, 4	Secondary & coupling, 1st I.F.T.	CZ.651.001
5, 6, 7	Primary & coupling, 2nd I.F.T.	CZ.651.002
8, 9	Secondary & coupling, 2nd I.F.T.	CZ.651.001
10, 11, 12	3rd I.F.T.	CZ.651.005
401, 402	Rod aerial assy.	CZ.323.107
403	SWI aerial coil	CZ.654.000
404	SW2 aerial coil	CZ.654.001
406, 407	B/C oscillator coil	CZ.652.006
408, 409	SWI oscillator coil	CZ.653.000
410, 411	SW2 oscillator coil	CZ.653.001
T301	Power transformer	CZ.344.155

SPEAKERS

LS301	MSP 12 TAC/8	CZ.161.318
LS302	or Rola C12M/8	CZ.161.319
LS303	MSP 5250A/10	CZ.161.159
LS304	or Rola 5FX/8	CZ.161.160
LS305	MSP 4MB/15	CZ.161.034
LS306	or Rola C4D/8	CZ.161.029

LAMPS

LP301	6.3V, 0.32A tubular	
302-304	screw	8045D
303	6.3V, 0.15A tubular screw	8008D
	Dual wave tuner, complete	CZ.210.958

11630

NOTES

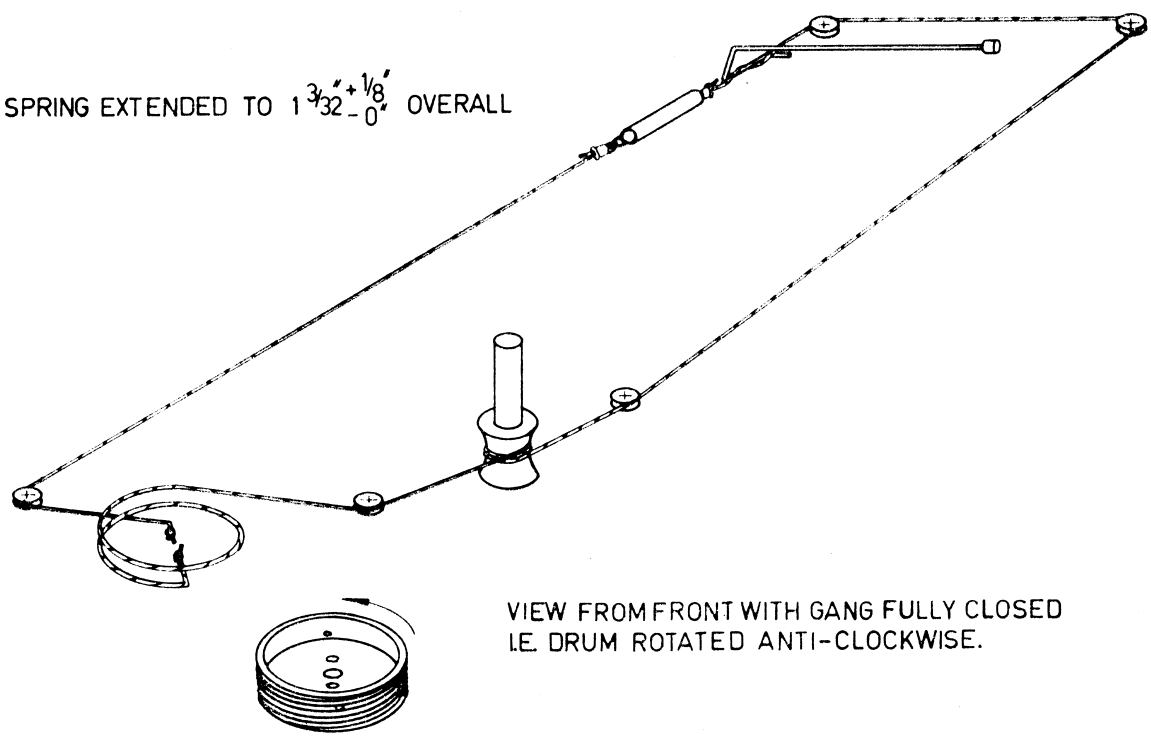
SPRING EXTENDED TO 1 3/32" +1/8" -0" OVERALL
VIEW FROM FRONT WITH GANG FULLY CLOSED
I.E. DRUM ROTATED ANTI-CLOCKWISE.

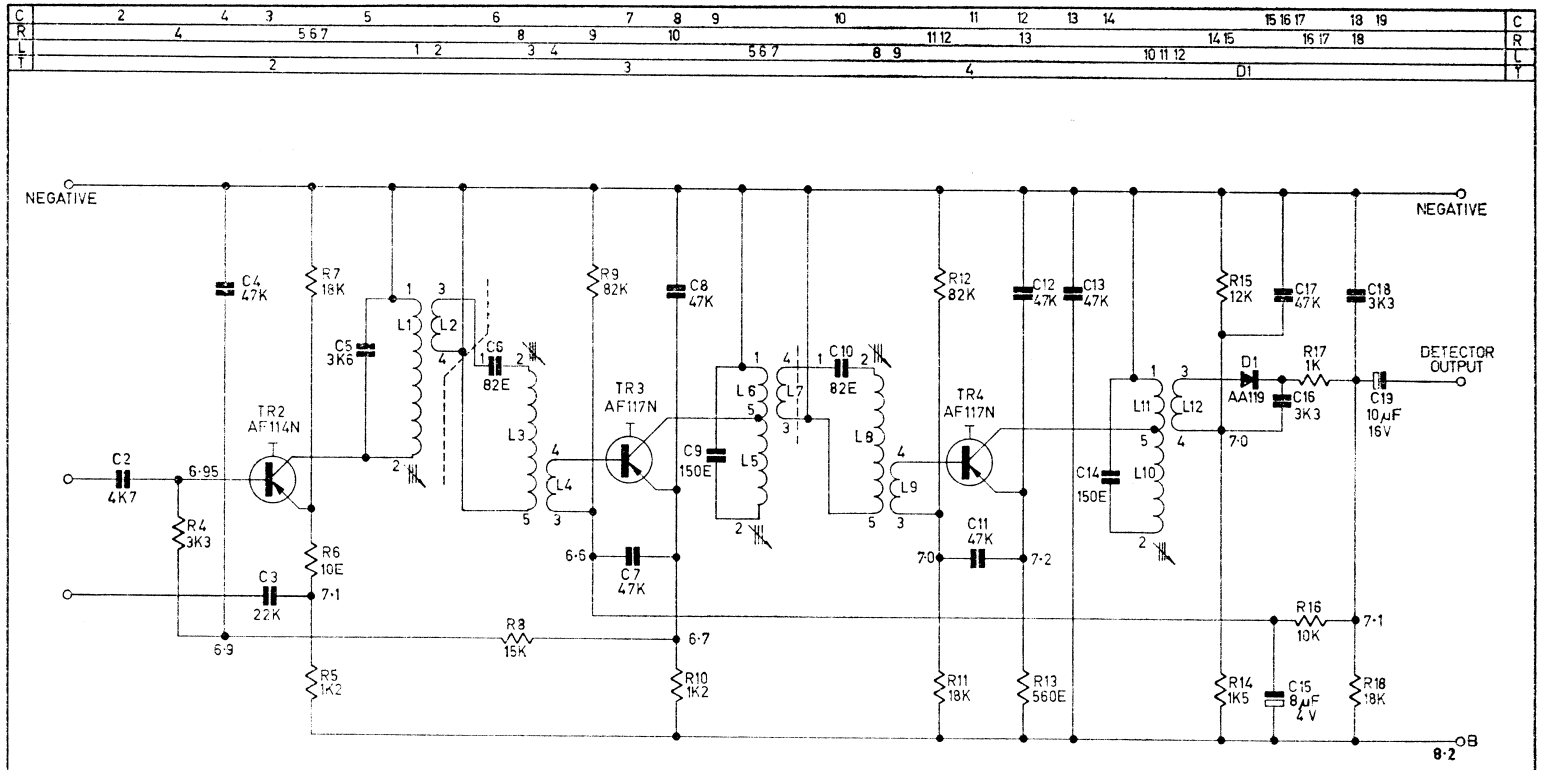

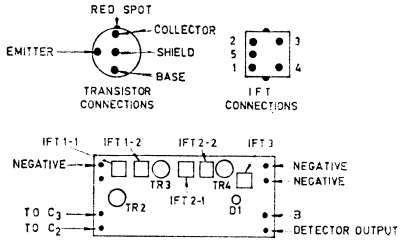

VIEW FROM COMPONENT SIDE OF BOARD

RESISTORS ARE ±10% UNLESS INDICATED OTHERWISE.
VOLTAGES MEASURED WITH V.T.V.M. RELATIVE TO NEGATIVE.
ALL TRANSISTOR SHIELD LEADS ARE CONNECTED TO NEGATIVE.

UF 404

11630

R	401, 402, 405, 404, 408, 407, 411, 409, 410	R
C	401, 402, 403, 405, 406, 404, 409, 408 410, 411, 414, 415, 413, 417, 419, 420, 421, 424, 423, 418, 425 426	C
L	401 402, 403, 404 406, 408, 411, 410, 409, 407	L

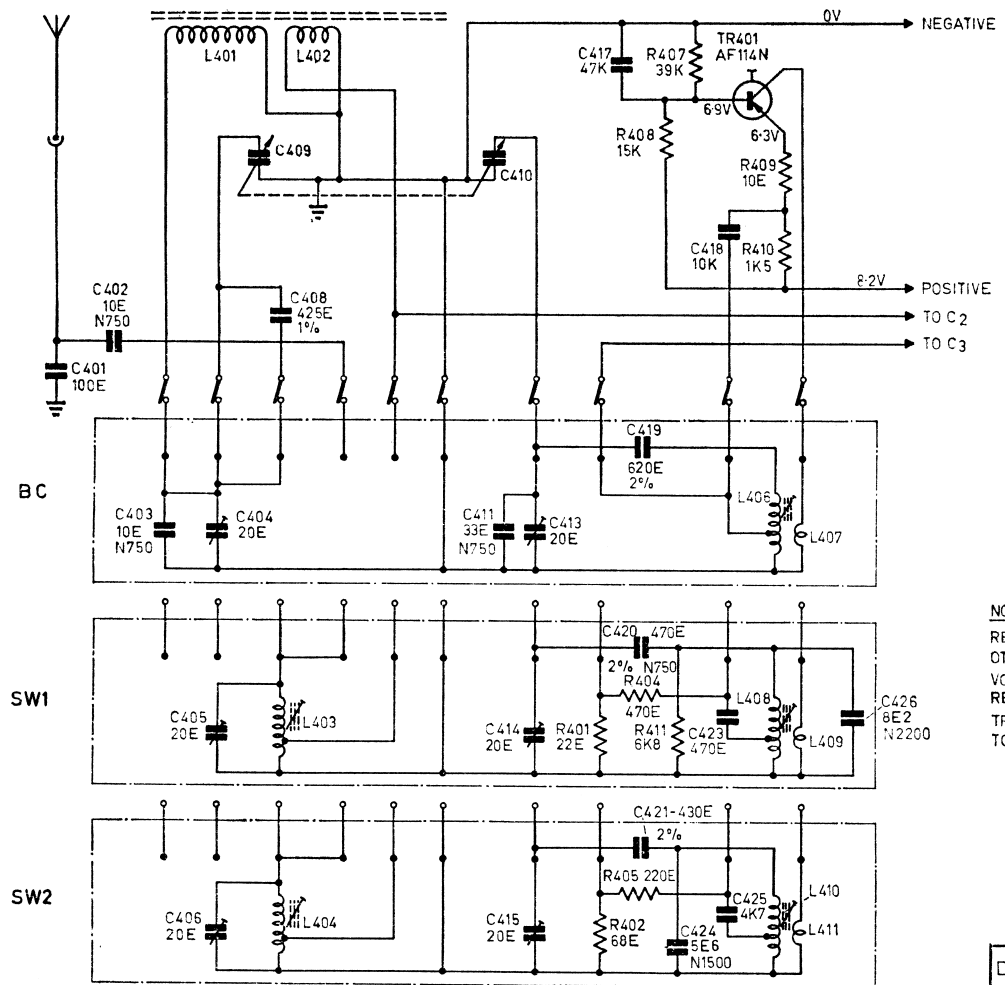

NOTES:

RESISTORS ARE ±10% UNLESS INDICATED OTHERWISE.

VOLTAGES MEASURED WITH V. T. V. M. RELATIVE TO NEGATIVE.

TRANSISTOR SHIELD LEAD IS CONNECTED TO NEGATIVE.

MODEL UT1

DUAL WAVE TUNER - CIRC. DIAG.

PHILIPS ELECTRICAL PTY. LIMITED

11630

11630

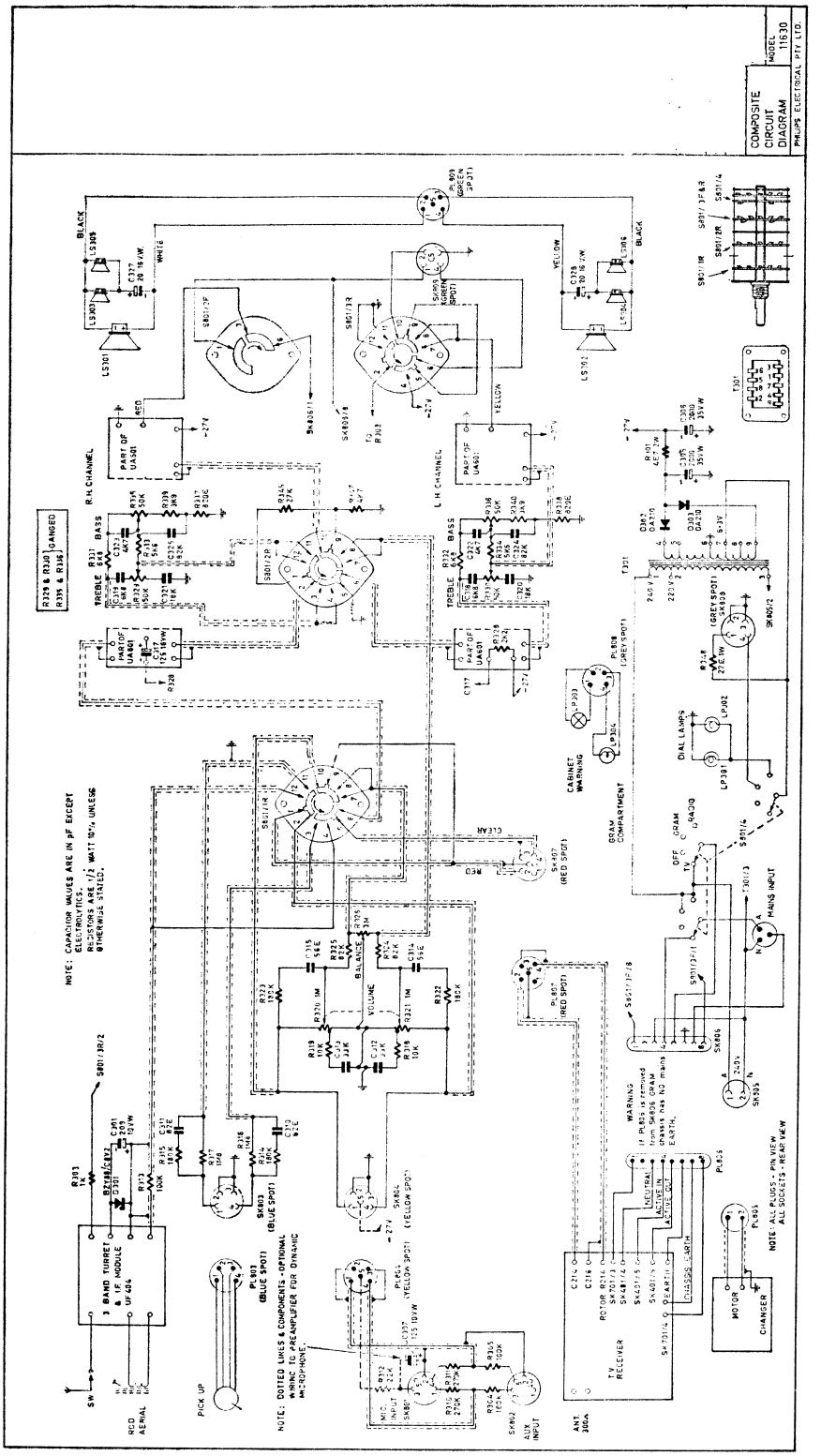
COMPOSITE CIRCUIT DIAGRAM
MODEL 11630
PHILIPS ELECTRICAL PTY. LTD.
NOTE: CAPACITOR VALUES ARE IN pF EXCEPT ELECTROLYTICS. RESISTORS ARE 1/2 WATT 10% UNLESS OTHERWISE STATED.
NOTE: DOTTED LINES & COMPONENTS - OPTIONAL WIRING TO PREAMPLIFIER FOR DYNAMIC MICROPHONE.
NOTE: ALL PLUGS - PIN VIEW ALL SOCKETS - REAR VIEW
R.H. CHANNEL
L.H. CHANNEL
BASS
TREBLE
BALANCE
VOLUME
CLEAR
RED
YELLOW
BLACK
WHITE
GREEN
3 BAND TURRET & I.F. MODULE
RGD AERIAL
PICK UP
MIC INPUT
AUX INPUT
ANT. 300Ω
TV RECEIVER
MOTOR CHANGER
CABINET WARNING
GRAM COMPARTMENT
DIAL LAMPS
MAINS INPUT
WARNING
CHASSIS EARTH

R	401, 402, 405, 404, 408, 407, 411, 409, 410	R
C	401, 402, 403, 405, 406, 404, 409, 408 410, 411, 414, 415, 413, 417, 419, 420, 421, 424, 423, 418, 425 426	C
L	401 402, 403, 404 406, 408, 411, 410, 409, 407	L

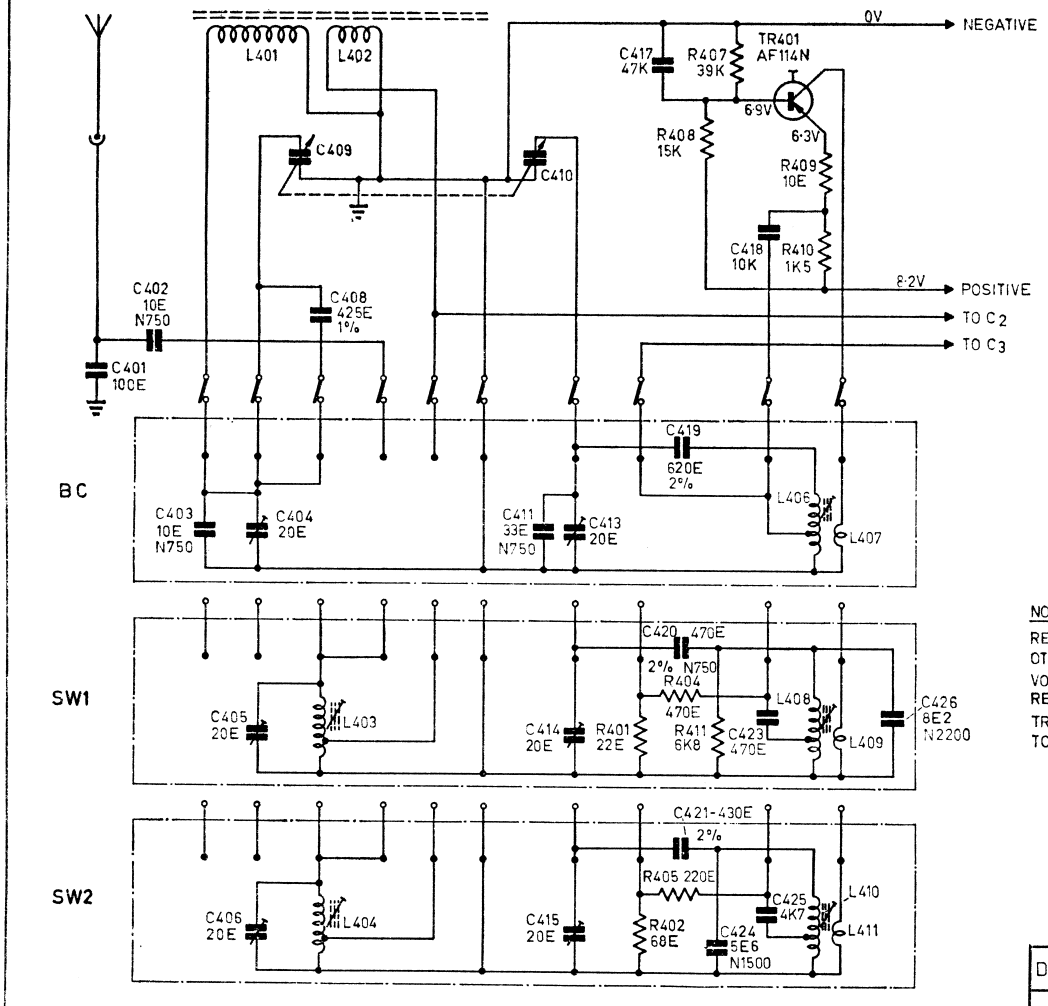

NOTES:

RESISTORS ARE ±10% UNLESS INDICATED OTHERWISE.

VOLTAGES MEASURED WITH V. T. V. M. RELATIVE TO NEGATIVE.

TRANSISTOR SHIELD LEAD IS CONNECTED TO NEGATIVE.

MODEL UT1

DUAL WAVE TUNER - CIRC. DIAG.

PHILIPS ELECTRICAL PTY. LIMITED

11630