PRELIMINARY SCHEMATIC
FOR SERVICE
TECHNICIANS ONLY

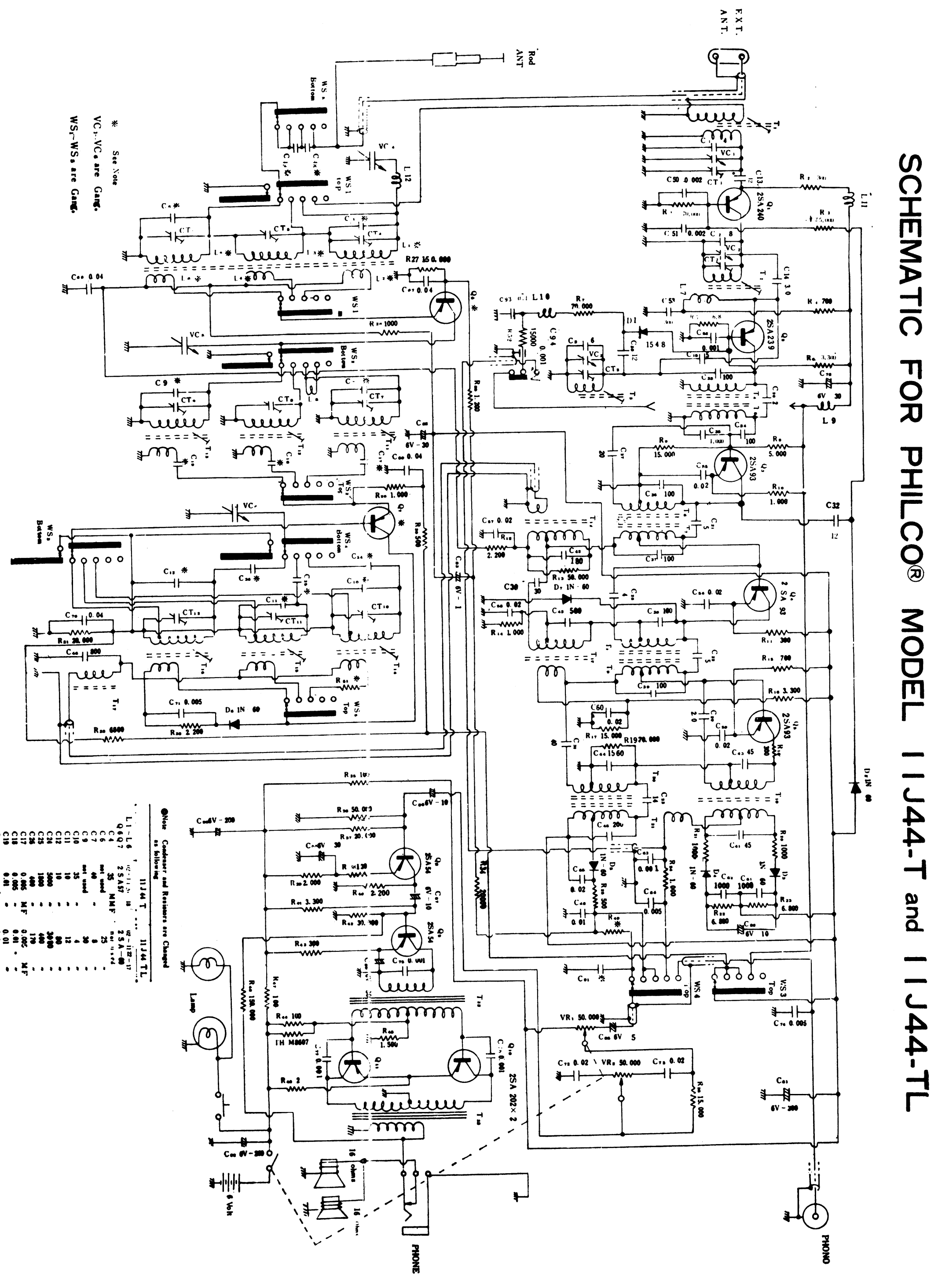

ALL RESISTANCE VALUES ARE OHMS