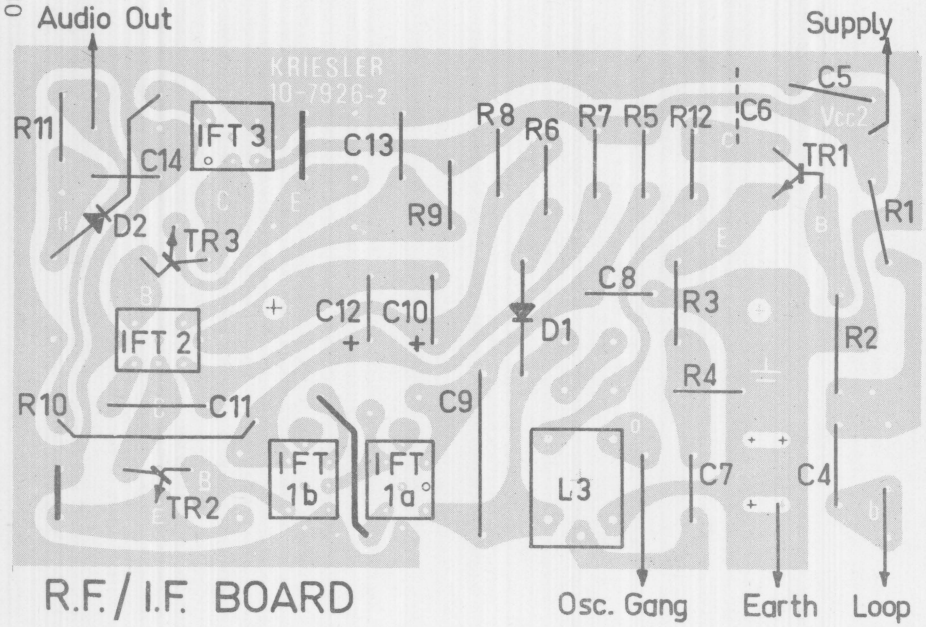

R.F./I.F. BOARD

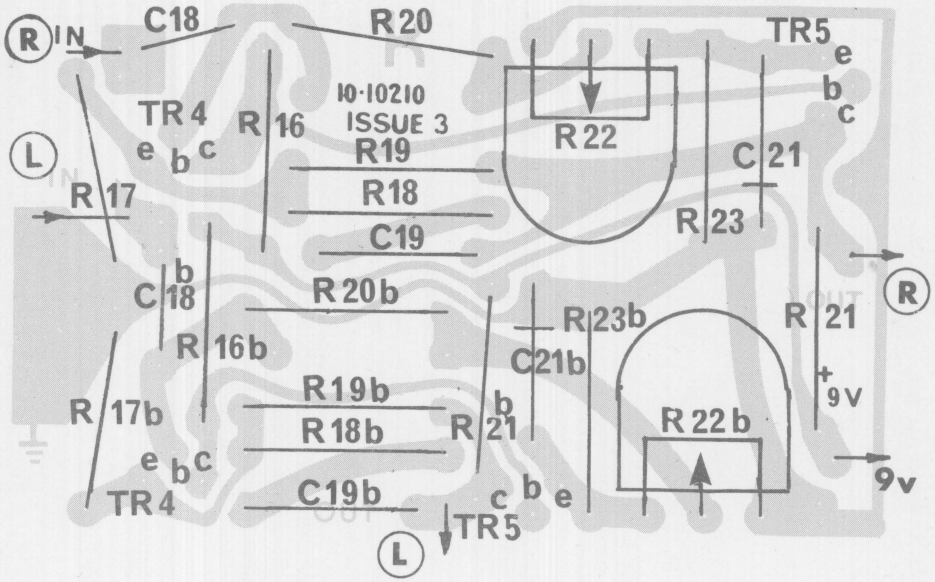

MAGNETIC PREAMPLIFIER BOARD

ALL VIEWS FROM PRINTED WIRING SIDE

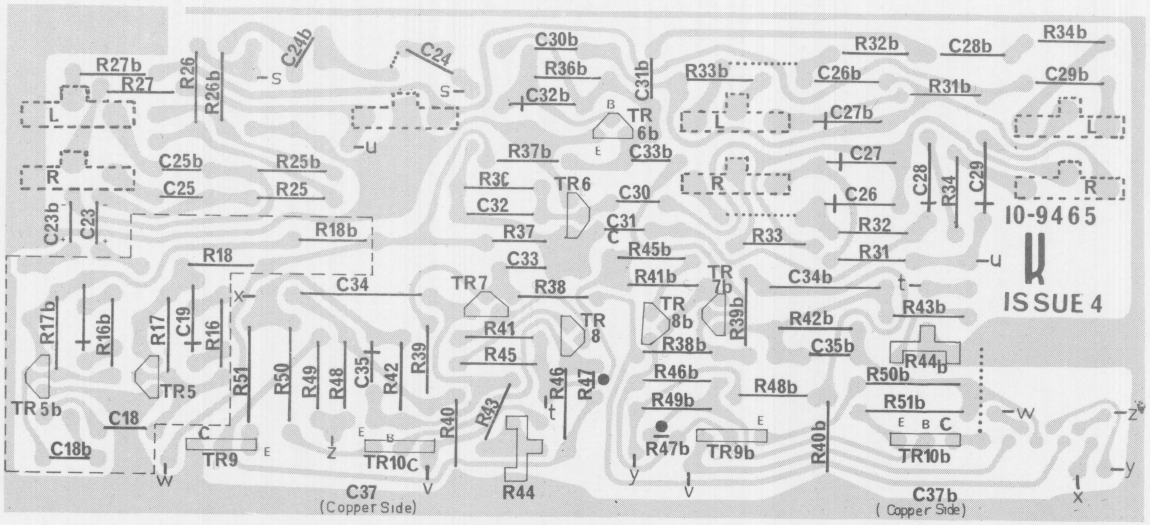

MAIN AMPLIFIER BOARD