MODELS 11·124 & 11·127.

issue 1. 1-6-69.
2. 1-8-69.
3. 1-10-69

NOTES

1. RE TR1, TR2, & TR3, IRRESPECTIVE OF TYPE NO.,
   TR1 IS COLOUR-CODED RED, STAMPED LETTER "B".
   TR2 IS COLOUR-CODED BLUE, STAMPED LETTER "C".
   TR3 IS COLOUR-CODED GREEN, STAMPED LETTER "D".
2. ALL VOLTAGES SHOWN ARE RELATIVE TO EARTH, NO SIGNAL CONDITIONS, USING A 40,000Ω/VOLT METER.
3. A WIRED FUSE IS IN SERIES WITH FILAMENT WINDING OF T.1. (0·012" TINNED COPPER WIRE.)

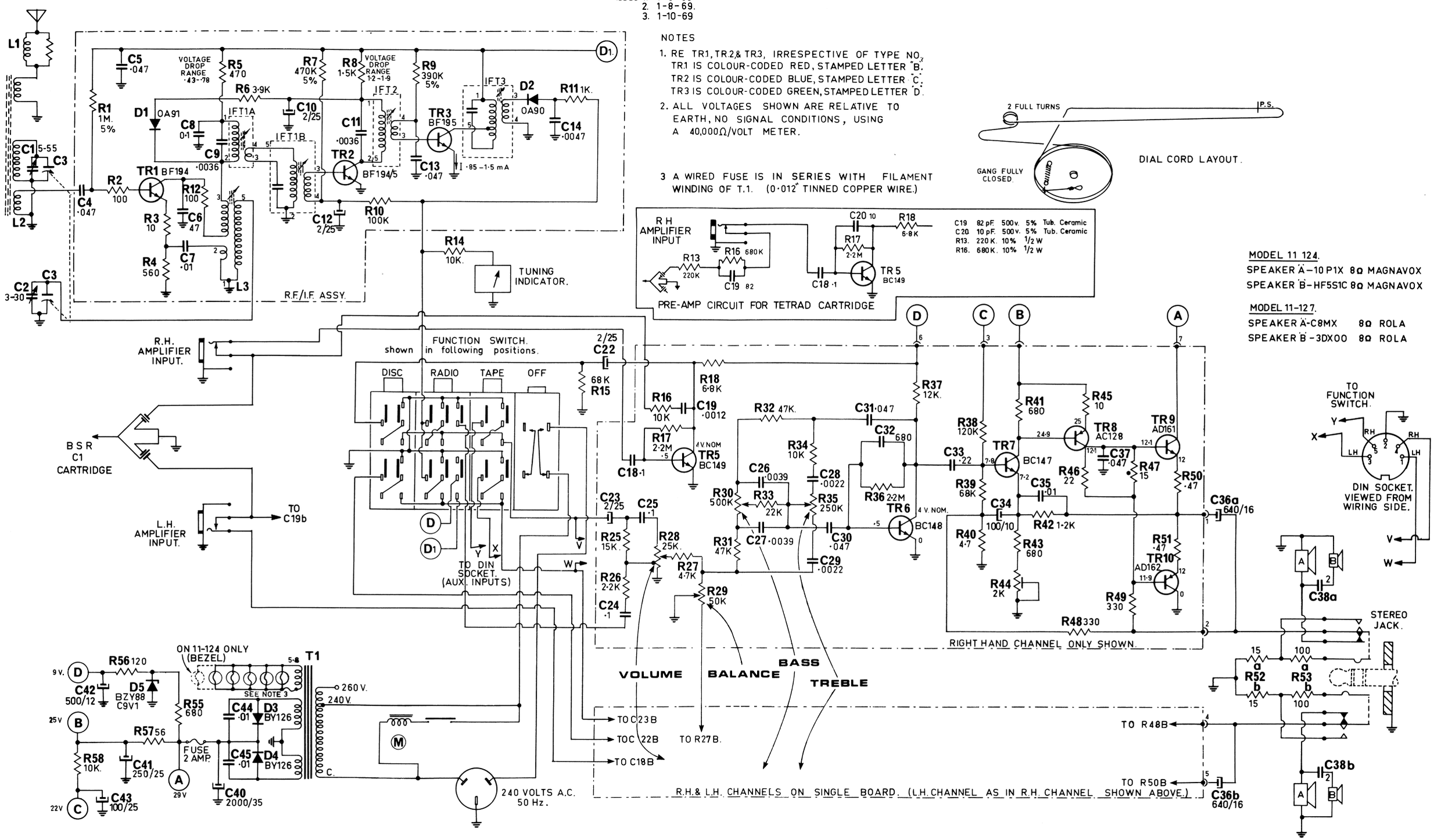

BASE CONNECTIONS.

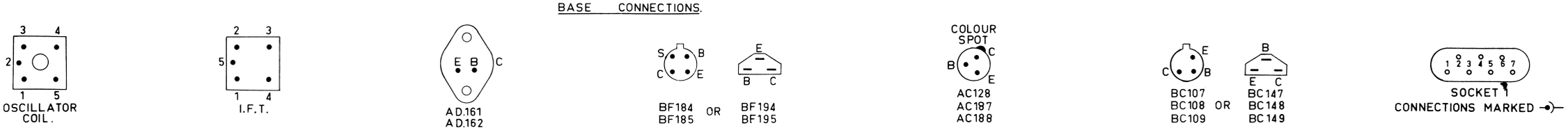

THIS CIRCUIT DIAGRAM IS PROVIDED FOR TECHNICAL GUIDANCE ONLY AND MAY DIFFER IN SOME DETAILS WITH THE APPARATUS TO WHICH IT IS ATTACHED. FOR ADDITIONAL INFORMATION REFER TO THE CURRENT TECHNICAL SERVICE DOCUMENTATION OR CONTACT YOUR NEAREST KRIESLER SERVICE DEPARTMENT.