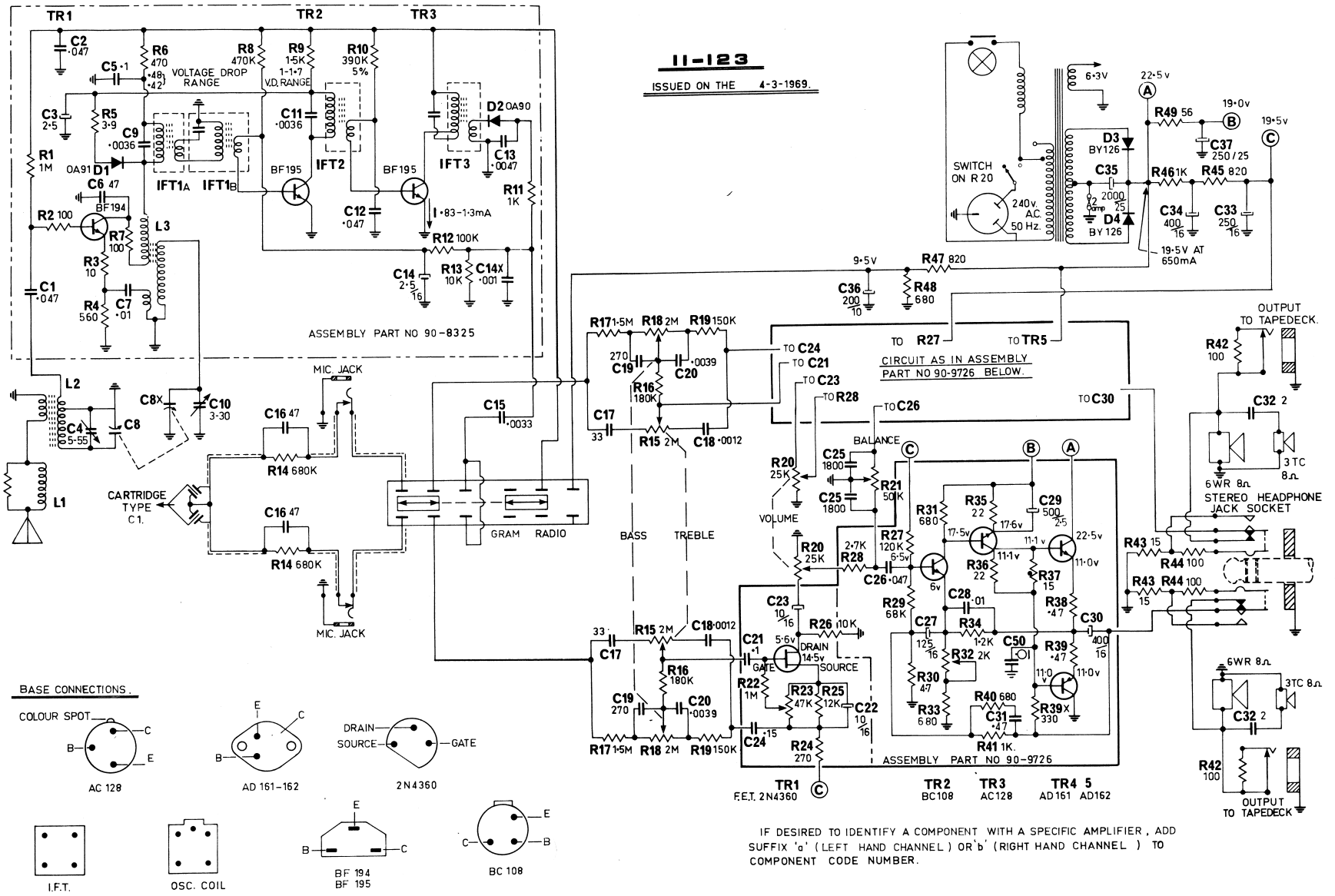

SERVICE PRECAUTIONS. TRANSISTOR A.D.161 – DO NOT (ACCIDENTLY) SHORT-CIRCUIT THE COVER, MOUNTING SCREWS, OR NUTS TO CHASSIS, NOR TO BASE, OR EMITTER LEADS.
F.E.T.2N4360. DO NOT USE SOLDERING IRON WITH UNEARTHED TIP, EVEN WITH RECEIVER OFF. USE HEAT SINK WHEN SOLDERING TRANSISTOR LEADS. DO NOT TRY TO MEASURE GATE VOLTAGE, (WHICH AS SHOWN WOULD HAVE NO SIGNIFICANCE). NOR MAKE RESISTANCE CHECK TO CHASSIS OR ACROSS R17. – IF REMOVING ASSOCIATED COMPONENTS, UNSOLDER F.E.T. FIRST, AND RESOLDER LAST.

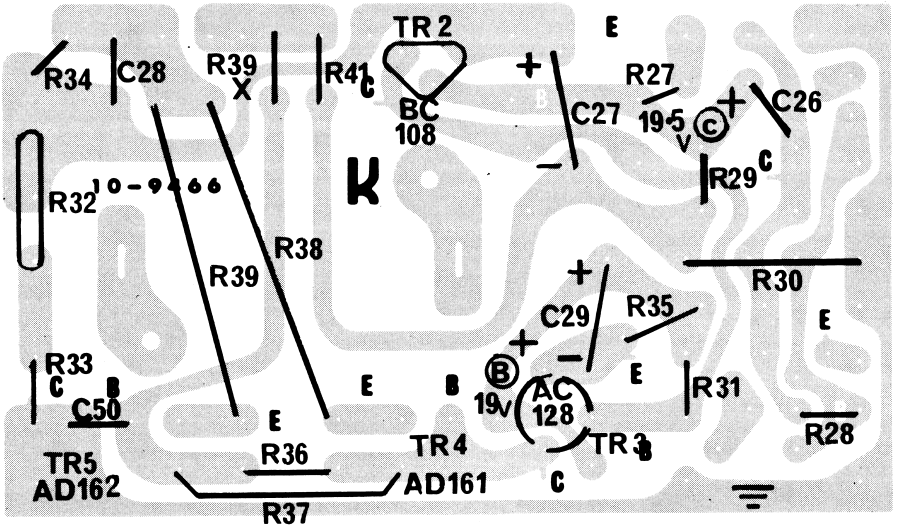
TR 2
E
R34
C28
R39
R41
C
BC
108
C27
R27
19-5
V
C26
R29
C
R32
10-9466
R38
R39
R30
C29
R35
E
R33
C
B
C50
E
B
19V
AC
128
E
R31
R28
E
R36
TR4
TR3
B
TR5
AD162
AD161
C
R37

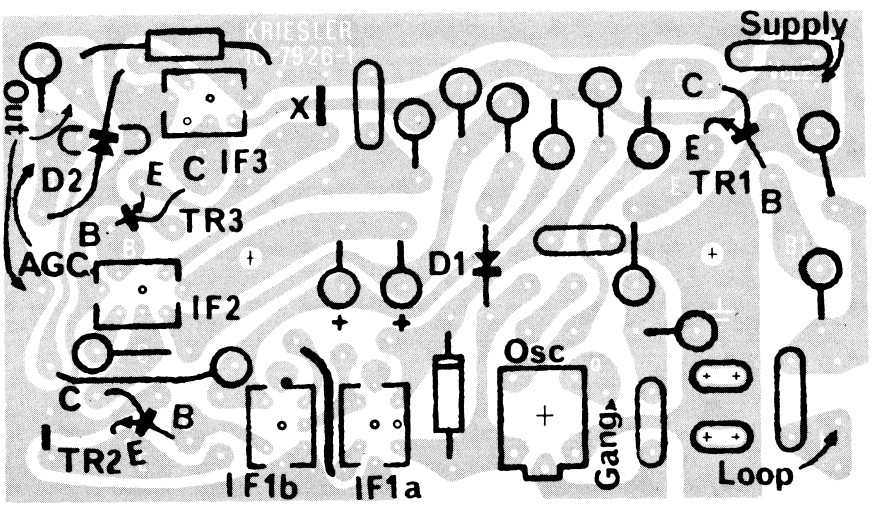
KRIESLER
7926-1
Supply
out
X
C
D2
E
C
IF3
E
TR1
B
B
TR3
AGC
D1
IF2
Osc
C
B
TR2
E
IF1b
IF1a
Gang
Loop

KRIESLER
AUSTRALASIA PTY. LIMITED

TECHNICAL ADVISORY SERVICE
SERVICE SHEET NO. 123

BOX 107 P.O. CARINGBAH N.S.W. 524-0444

PLEASE CIRCULATE TO YOUR SERVICE DEPARTMENT

MODULAR STEREOPHONIC RADIOGRAM MODEL NO. 11-123

DESCRIPTION Model 11-123 is 13 transistor, 4 diode Broadcast Band Stereophonic Radiogram, housed in three timber units. These may be located together to form a combination or positioned separately, as desired by the user. The main unit, known commercially as the Command Module, houses the chassis and controls. The remaining two units, known as the Satellite Modules, house the loudspeakers; each Satellite module is fitted with a three-cone speaker system, one Module for each stereo channel.

CONTROLS

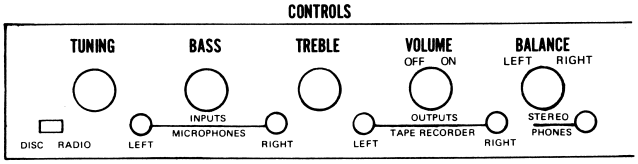

SPEAKERS: 2 x 6", 8Ω twin cone Magnavox 6WR. 2 x 3" 8Ω Magnavox 3TC.

TRANSISTOR PROTECTION: Switch "Off" before connecting or disconnecting speakers because, if an accidental short occurs on the speaker jacks and the amplifier is operating at high volume, damage to the output transistors is likely to result. The amplifiers have been designed to operate into an 8Ω load. If (either temporarily or permanently) operating extension speakers separately, or in parallel with the speakers provided and a makeshift speaker impedance match is considered acceptable, the total combination impedance should be not less than 6Ω, otherwise transistor damage may result.

RECORD CHANGER: BSR MA65
STYLUS: ST4 diamond.
CARTRIDGE: C1 tropic-proof ceramic.
STYLUS PRESSURE: 6 grammes.

DIMENSIONS: Command Module:— 18¾" Wide, 20¾" High (including 13" legs), 17¼" Deep.
Each Satellite Module:— 10" Wide, 16" High 7¾" Deep.
WEIGHT:— 2 Qtrs. 10 lb.

MAINS SUPPLY: 230-275 V.A.C., 50 Hz, transformer tapped for nominal 240 or 260 V.A.C. The chassis is suitable for operation on a mains frequency of 40, 50 or 60 Hz., but for "Gram" operation on other than 50 Hz., the motor must be changed.

DIAL LAMP FUSE: A wired fuse for the dial lamps is fitted in the power supply (0.012" diameter tinned copper wire).

AERIAL: In-built ferrite rod, with provision for connecting an external aerial.

EARTH: If the mains earth is not a satisfactory 'radio' earth, a separate earth may be connected to the metal chassis — work (not the printed board earth).

Tuning Range: 525-1635 KHz. I.F. 455 KHz **ALIGNMENT:** Conventional

TRANSPORT PRECAUTIONS: On all occasions of transporting the Command Module, the record changer transit screws should be tightened and the tone arm anchored under the clamp-clip to prevent damage to the unit. On installation, the transit screws must be loosened; and the tone arm unclamped preparatory to operating the changer.

SERVICE PRECAUTIONS: Transistor AD161. Do NOT (accidentally) short circuit the cover, mounting screws or nuts to chassis: nor to base or emitter leads. This will place a short on the power rectifier diodes and damage them.

F.E.T. 2N4360. Do NOT use soldering iron with unearthed tip, even with the receiver off. If using low-voltage iron, earth one side of the secondary winding supplying the voltage to it.
Use heat sink when soldering transistor leads.
If removing associated components, unsolder F.E.T. first and resolder last. Do NOT try to measure Gate voltage (which, as shown would have no significance), nor make resistance check to chassis or across R17. Over a range of audio frequencies, the input impedance is in the order of 4 MΩ consequently even the input impedance of many service-type C.R.O's, if placed across the F.E.T., would alter the operating conditions significantly, and therefore provide virtually no useful information.

ALIGNMENT PROCEDURE

STEP	SIGNAL GEN. FREQUENCY.	CONNECT SIGNAL GENERATOR TO –	WITH TUNING GANG –	PROCEED AS FOLLOWS
1	455 KHz	Base of TR 1	Closed	Peak core of IFT 3
2	455 KHz	IMPORTANT	Closed	Peak core of IFT 2
3	455 KHz	Connect generator earth to emitter of TR 1	Closed	Peak core of IFT 1
4	–		–	Repeat until no further gain is obtainable.
5	455 KHz	Radiate into Aerial	Closed	Check alignment of IFT 1
6	525 KHz	Radiate into Aerial	Closed	Adjust oscillator coil until signal is heard.
7	1635 KHz	Radiate into Aerial	Open	Tune oscillator trimmer until signal is heard.
8	600 KHz	Radiate into Aerial	at 600 KHz	Peak aerial coil
9	1500 KHz	Radiate into Aerial	at 1500 KHz	Peak aerial trimmer.
10	Repeat 8 and 9 until no further gain is obtainable.			

NOTE: Inject 455 KHz signal to base of TR 1 via a 0.22 uF capacitor.

CARE OF CABINET: Polish with any reputable make of furniture polish or Scandinavian teak oil as appropriate to the timber. If alcoholic spirits are accidentally spilled on woodwork, the effect cannot be removed unless wiped off immediately. Beer, soft drinks milk beverages, children's butter-y or egg-y fingermarks stains, may be removed by wiping clean with a soft cloth and polishing with furniture polish. The anodised aluminium matt finishes are reasonably impervious to boiling water and to fingermarks if wiped off without delay; also to most household foodstuffs, soft drink and alcohol. However, milk, lemon juice, household cleansers and bleaches produce a stain which, though usually discernable to certain viewing angles only, is indelible. Rubbing with steel wool will produce a prominent stain, therefore VERY LIGHT rubbing should only be resorted to if the stain so produced is less disfiguring than the original stain (however produced) which it is desired to remove. A soft cloth moistened with water, to which a few drops of detergent have been added, will remove all substances which do not stain. After cleaning, the surface should be dried with a soft cloth.

CHASSIS REMOVAL: WARNING. Disconnect completely from the mains supply before handling metalwork, components or wiring. The chassis is held on to the horizontal mounting board by two screws, 12" apart and 3½" in from the front of the Command Module, and are accessible from underneath the unit. Remove screws and lift out chassis to the extent of the lead lengths; exercising care, while doing so, that the inside wall surfaces of the cabinet are not marked by the ends of the chassis (the insertion of a thin slip of cardboard or thick paper between the chassis ends and the inside wall surfaces would be an added precuation).

RECORD CHANGER REMOVAL: Withdraw the chassis, as for service access. Disconnect appropriate leads. Reach in from the front of the unit and turn the transit screw clips so that they lie vertically. The changer may now be lifted off the motor board and removed from the cabinet.

RESISTOR DATA

R1, R8, R10 – 0.5W/5%, R43 – 5W/10%, R47, R48, R49 – 1W/10%.
All others 0.5W/10%, R23 – Pre-set Potentiometer Philips E 097AD/47K,
R32 - Pre-set Potentiometer IRC P4, R37 – Thermistor Philips E215 AB/P15E

CAPACITOR DATA

C1.047µf 25v + 80-20% DRB
C2.047µf 25v + 80-20% DRB
C3 2.5µf 64v + 50-10% E
C4 5.55ρf Trimmer D. CWA/01
C5 .1µf 25v + 80-20% DRC
C6 47ρf 500v ± 10% Cer.
C7 .01µf 25v ± 20% DRA
C8/8x Timing Gang MSP62.8234
C9 .0036µf 50v ± 5% St.
C10 3.30ρf Trimmer D.CW/NPO
C11 .0036µf 50v ± 5% St.
C12 .047µf 25v + 80-20% DRB
C13 .0047µf 25v ± 20% DRF
C14 2.5µf 16v + 50-10% E
C14x .001µf 200v ±10% St.
C15 .0033µf 50v ± 10% St.
C16 47ρf 100v ± 10% St.
C17 33ρf 500v ± 10% Cer.
C18 .0012 µf 50v ± 10% St.
C19 270ρf 600v ± 10% St.
C20 .0039µf 50v ± 10% St.
C21 .1µf 160v ± 10% Pol.
C22 10µf 16v + 50-10% E
C23 10µf 16v + 50-10% E
C24 .15µf 160v ± 10% Pol.
C25 1800ρf 400v ± 10% Pol.
C26.047µf 25v + 80-20% DRB
C27 125µf 16v + 50-10% E
C28 .01µf 25v + 80-20% DRB
C29 500µf 2.5v + 50-10% E
C30 400µf 16v + 50-10% E
C31 .47µf 160v ± 10% Pol
C32 2µf 200v Met. Paper
C33 250µf 16v + 50-10% E
C34 400 µf 16v + 50-10% E
C35 2000µf 25v + 100-10% E
C36 200µf 10v + 50-10% E
C37 250µf 25v + 50-10% E
C50 .01µf 25v ± 20%. DRA

LEGEND:– DR__= Ducon Redcap Style....., Cer=Ceramic, Pol=Polyester, St=Styroseal, E-Electrolytic, D=Ducon.

MODEL 11-123 PARTS LIST

Part No.	Description	Part No.	Description
26.9075	Spacer	140D	Bakelite Connector
90.8323	Lid Stay Assembly	10.8223	Terminal Panel
90.9363	Knobs	14.8315	Loopstick Assembly
20.8298	Light Diffuser	14.8229	Oscillator Coil
69.9716	Dial Scale Screened	34.4657	Peaking Coil
30.8231	Cabinet Tray	Philips CZ-651-000	1 FT 1a
Philips 8045D	Dial Lamp 6.3v 0.32A	Philips CZ-651-004	1 FT 2
733-8.6 Double Contact	Dial Lamp socket	Philips CZ-651-005	1 FT 3
MOJB15R	Jacks	Philips CZ-651-006	1 FT 1b
556.1.23	Socket, Terminal	32-9712	Tone Pots
555-1-2	Connector	32-9713	Volume Pot (R22)& Off/On SW.
691-10-1	Speaker Plug	32-8214	Balance Pot (R23)
JL - 029	Stereo H/Phone	MSP 62	R/G. Switch
733-23-3	Speaker Socket		