SANYO

10-Transistor, 4-Band Portable Radio

MODEL 10X-850

SERVICE MANUAL

SANYO ELECTRIC CO., LTD.

INTERNATIONAL DIVISION : SANYO ELECTRIC TRADING CO., LTD.
OSAKA, JAPAN

SPECIFICATIONS

Frequency Range ..... MW 530-1605 KC
SW 1 2.1- 5.2 MC
SW 2 5.8- 7.7 MC
SW 3 9.5- 21.0 MC

Intermediate Frequency ..... 455 KC

Sensitivity (for 100 mW output) ..... MW 50 μV/m
SW 1 150 μV/m
SW 2 130 μV/m
SW 3 180 μV/m

Output Power ..... Undistorted 600 mW
Maximum 900 mW

Power Supply ..... 6V (Four $1\frac{1}{2}$V standard flashlight batteries or optional AC adaptor)

Current Drain ..... No signal 20 mA
Maximum 350 mA

Speaker ..... $3\frac{1}{2}''$ permanent dynamic type
8 ohms voice coil impedance

Dimenfions ..... 9-" wide × 7" high × $2\frac{3}{4}''$ deep

Weight ..... 11 pounds

Outlets ..... Jack for low-impedance earphone
Jack for DC 6V input

ALIGNMENT PROCEDURES

Collector Current of IF Stage

Adjust the semi-fixed resistor (SVR 100 K) for 300 μA current circulation through a collector of the transistor (Tr3 2SA101 X).

Alignment of Band Coverage & Tracking

PROCEDURES	POSITION OF BAND SWITCH	SIGNALI RADIATION	FREQUENCY OF SIGNAL GEN.	DIAL SETTING OF RADIO	COMPONENTS TO BE ADJUSTED FOR MAXIMUM OUTPUT
IF STAGE	MW	IRE LOOP	455 KC	Lowest End	IFT T3, T 2 & T 1
MW BAND	MW	IRE LOOP	515 KC	Lowest End	MW OSc coil L 5
	〃	〃	1650 KC	Highest End	MW Osc trim Ct 5
	〃	〃	600 KC	600 KC	MW Ant coil L 1
	〃	〃	1400 KC	1400 KC	MW Ant trim Ct 1
SW1 BAND	SW 1	IRE LOOP	2.0 MC	Lowest End	SW 1 Osc coil L 6
	〃	〃	5.4 MC	Highest End	SW 1 Osc trim Ct 6
	〃	〃	2.3 MC	2.3 MC	SW 1 Ant coil L 2
	〃	〃	5.0 MC	5.0 MC	SW 1 Ant trim Ct 2
SW2 BAND	SW 2	IRE LOOP	5.75 MC	Lowest End	SW 2 Osc coil L 7
	〃	〃	8.0 MC	Highest End	SW 2 Osc trim Ct 7
	〃	〃	6.0 MC	6.0 MC	SW 2 Ant coil L 3
	〃	〃	7.0 MC	7.0 MC	SW 2 Ant trim Ct 3
SW3 BAND	SW 3	IRE LOOP	9.2 MC	Lowest End	SW 3 Osc coil L 8
	〃	〃	22.5 MC	Highest End	SW 3 Osc trim Ct 8
	〃	〃	10.0 MC	10.0 MC	SW 3 Ant coil L 4
	〃	〃	21.0 MC	21.0 MC	SW 3 Ant trim Ct 4

PAPTS LIST

PART NO.	DESCRIPTION	Q'TY
CABINET		
R-A10850	Cabinet Assembly	1
R-31837	Back Cover - rear enclosure	1
R-31838	Battery Compartment Lid	1
R-S81514	Handle Assembly	1
R-241445	Stud Screw - handle mtg	2
R-241257	Ring - 〃	2
R-	Polyethylene Washer (0.3t×6.3×9.5) - 〃	4
R-S81512d	Pointor Assembly	1
R-S81510	Knob - volume & tuning	2
R-S81513	Knob - fine tuning	1
R-28153	Knob - band select	1
R-S7084	Special Screw - back cover mtg	4
R-39427	Plastic Mount - volume & tuning shaft	1
R-471446	Battery Instruction Sheet	1
R-32685	Composite Pulley	1
R-44122a	Cushion Seat - tuning capacitor	1
R-32767	Drum	1
R-S7077	Special Screw - drum mtg	1
R-15041	Tension Spring - drum	1
R-15096a	Tension Spring - composite pulley	1
ELECTRIC PARTS		
R-S81560a	Antenna Coil - MW & SW1 L1 L2	1
R-W2340	Antenna Coil - SW2 & SW3 L3 L4	1
R-W8164-4	Oscillator Coil - MW L5	1
R-W8254-4	Oscillator Coil - SW1 L6	1
R-W8255-4	Oscillator Coil - SW2 L7	1
R-W8256-4	Oscillator Coil - SW3 L8	1
R-W5T008	IF Transformer T1	1
R-W5T039	IF Transformer T2	1
R-W5T060	IF Transformer T3	1
R-W6226	Input Transformer 25 type T4	1
R-W6361	Output Transformer 19 type T5	1
R-C1046ya	Varaiable Capacitor - tuning capacitor	1
R-C1093	Variable Capacitor - fine tuning cap. CV-3	1
R-R11686	Variable Resistor - volume control	1
R-R11011	Semi - fixed Variable Resistor 100K ohms	1
R-S6605	Speaker 4″ 8 ohms	1
R-S6365	Earphone	1
R-S4416	Rotary Switch - band select	1
R-S2173a	Composite Jack - ext. batt. & earphone	1
R-S2107	Jack - phono input	1
R-261193	Heat Sink - for power transistors	2
R-23552	Cooling Holder - on batt. c. metal	1
R-14252	Tapered Spring - negative batt. terminal	1
R-23876	Battery Terminal - positive	1
R-S1323	Telescopic Antenna	1
R-23676	Soldering Lug - telescopic antenna	1
TRANSISTORS		
2SC545D	Transistor Tr1	1
2SA222	〃 Tr2	1
2SA101X	〃 Tr3	1
2SA101Y	〃 Tr4	1
2SB185AA	〃 Tr5 & Tr6	2
2SB22	〃 no color Tr7 Tr8 Tr9 & Tr10	4
OTHERS		
1S188	Diode	1
SDT-06	Thermistor	1

SYMBOL NO.	DESCRIPTION			
FIXED VALUE RESISTORS				
R1 R3	15 ohms	±10%	¼W	
R2 R8	68 〃	〃	〃	
R4	1.5K 〃	〃	〃	
R5	4.7K 〃	〃	〃	
R6	8.2K 〃	〃	〃	
R7	33 〃	〃	〃	
R9 R10 R14	22 〃	〃	〃	
R11	3.9K 〃	〃	〃	
R12	82 〃	〃	〃	
R13 R27	820 〃	〃	〃	
R15	2.2K 〃	〃	〃	
R16	18K 〃	〃	〃	
R17	22K 〃	〃	〃	
R18	1.8K 〃	〃	〃	
R19	1K 〃	〃	〃	
R20	390 〃	〃	〃	
R21	220 〃	〃	〃	
R22 R23	5.6K 〃	〃	〃	
R24	56K 〃	〃	〃	
R25 R29	12K 〃	〃	〃	
R26	1.2K 〃	〃	〃	
R28	3.3K 〃	〃	〃	
R30	330 〃	〃	〃	
R31	82 〃	±5%	〃	
R32	1.5K 〃	〃	〃	
R35 R36	3.3 〃	〃	〃	
R33	150 〃	±10%	〃	
R34	39K 〃	〃	〃	
FIXED VALUE CAPACITORS				
C1	25pF	±10%	50V	Ceramic
C2	3pF	±0.5pF	〃	〃
C3 C16	60pF	±10%	〃	Mica Square
C4	5pF	±0.5pF	〃	Ceramic
C5	900pF	±10%	25V	Styrol Tubular
C6	13pF	〃	50V	Ceramic
C7 C9 C23	0.01μF	±20%	〃	Mylar Square
C8	0.005μF	〃	〃	〃 〃
C10	0.004μF	〃	〃	〃 〃
C11 C14	0.002μF	〃	〃	〃 〃
C12	0.002μF	〃	〃	Ceramic Square
C13	12pF	±10%	〃	〃
C15 C22	8pF	〃	〃	〃
C17	1200pF	〃	25V	Styrol Tubular
C18	330pF	〃	〃	〃 〃
C21	600pF	〃	25V	〃 〃
C24	500pF	±20%	50V	Ceramic Square
C25 C27 C28	0.01μF	+80%	〃	〃
C26 C31 C35	0.02μF	〃	〃	〃 Disc
C30	0.001μF	〃	〃	〃
C32	3pF	±0.5pF	〃	Ceramic
C33	4pF	〃	〃	〃
C34	0.04μF	+80%	50V	Ceramic Disc
C36 C37	0.01μF	±20%	〃	〃 〃
C44 C45	0.02μF	+80%	〃	〃 〃
C48	0.04μF	±20%	〃	Mylar Square
C49	500pF	〃	〃	Ceramic 〃

PART NO.	DESCRIPTION			
ELECTRYTIC CAPACITORS				
R-C9136	Electrolytic Capacitor 100μF	6V	C20	C46
R-C9153	〃 10μF	3V	C29	
R-C9131	〃 5μF	6V	C38	
R-C9115	〃 1μF	10V	C39	C41
R-C9133	〃 30μF	3V	C40	C42
R-C9143	〃 200μF	6V	C43	

CIRCUIT DIAGRAM

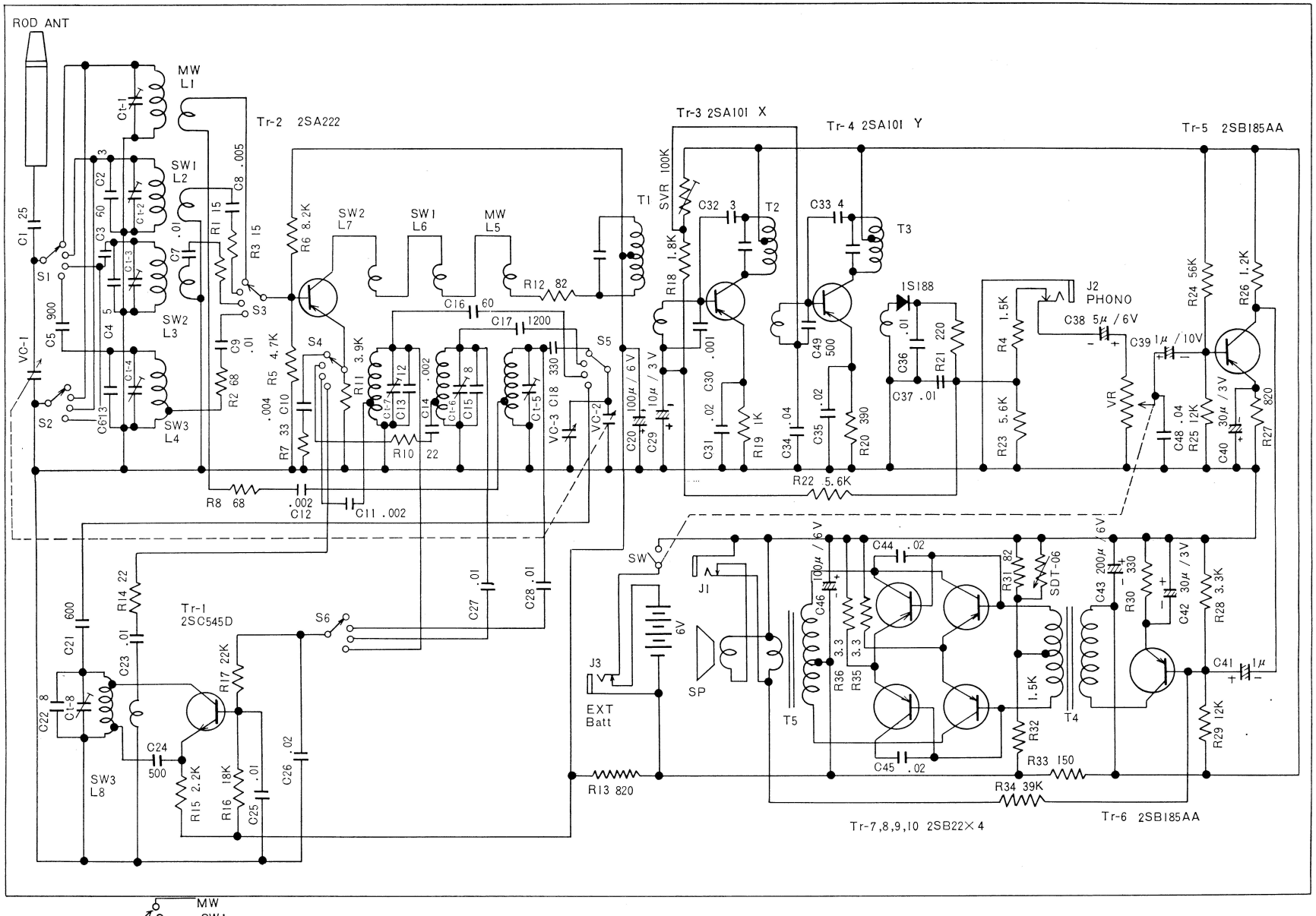
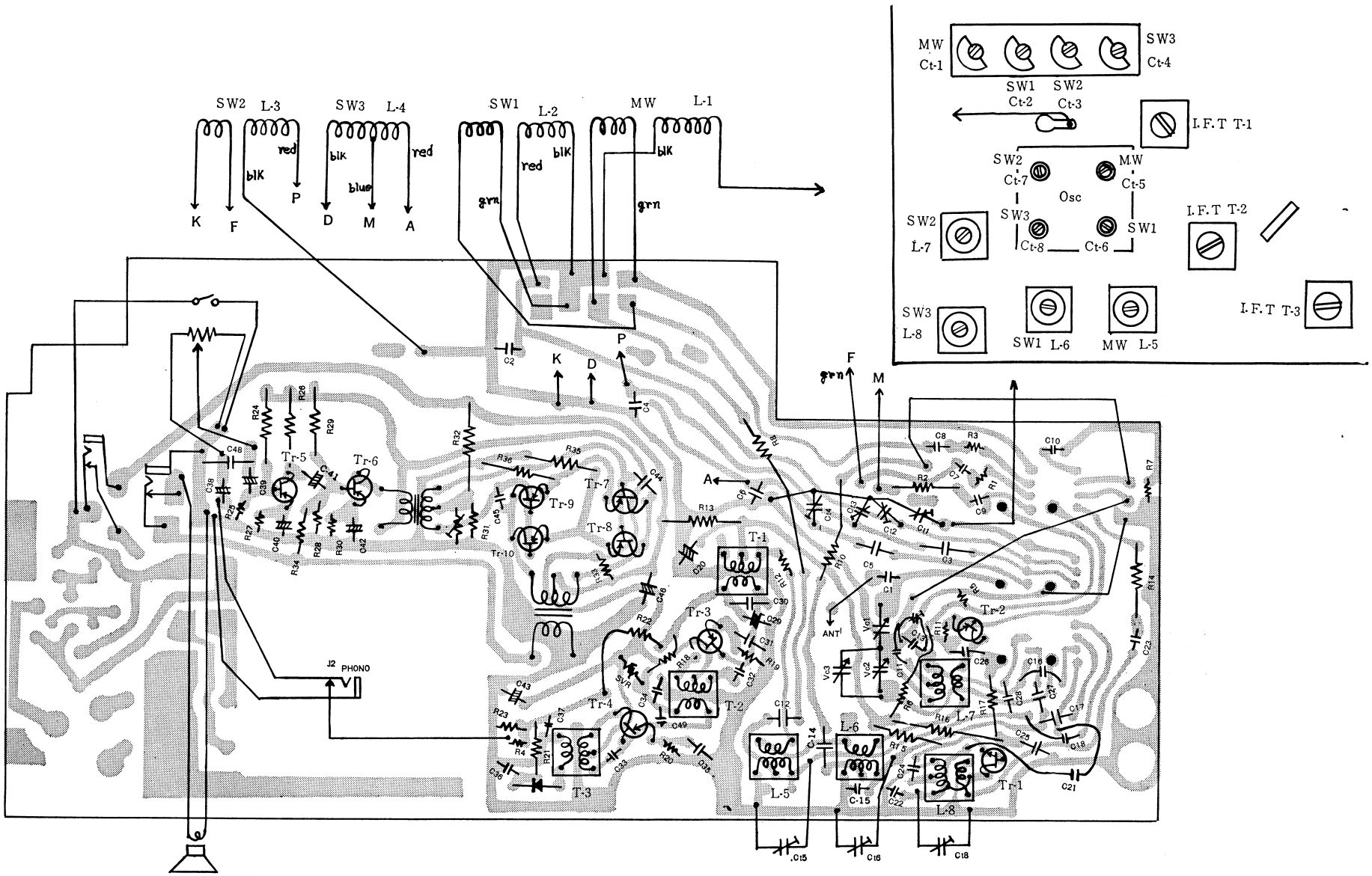
INTER-PARTS WIRING