Model 10X-718T Bottom View of Printed Circuit Board

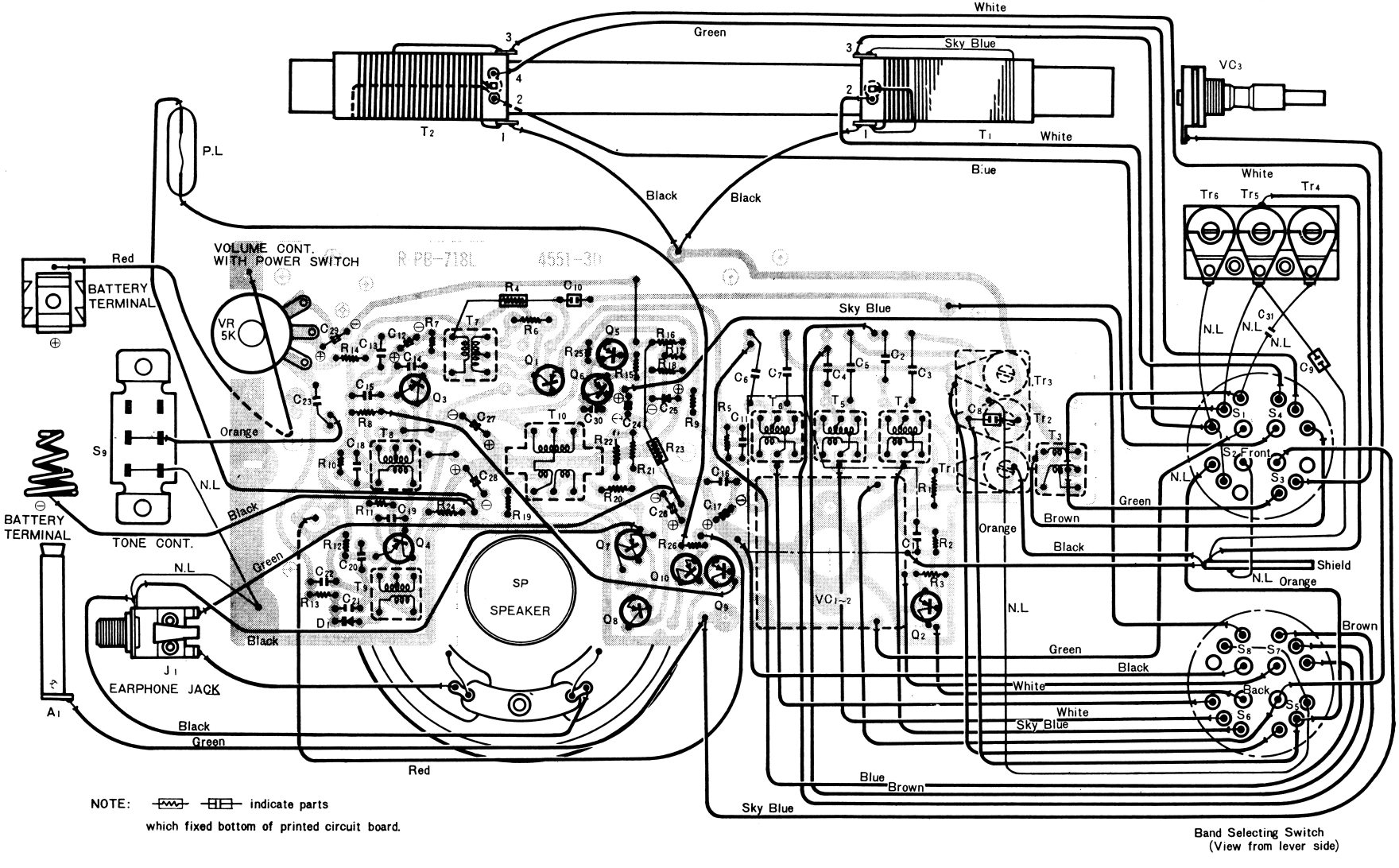

NOTE: indicate parts which fixed bottom of printed circuit board.

Band Selecting Switch (View from lever side)

Model 10X-718T Schematic Diagram

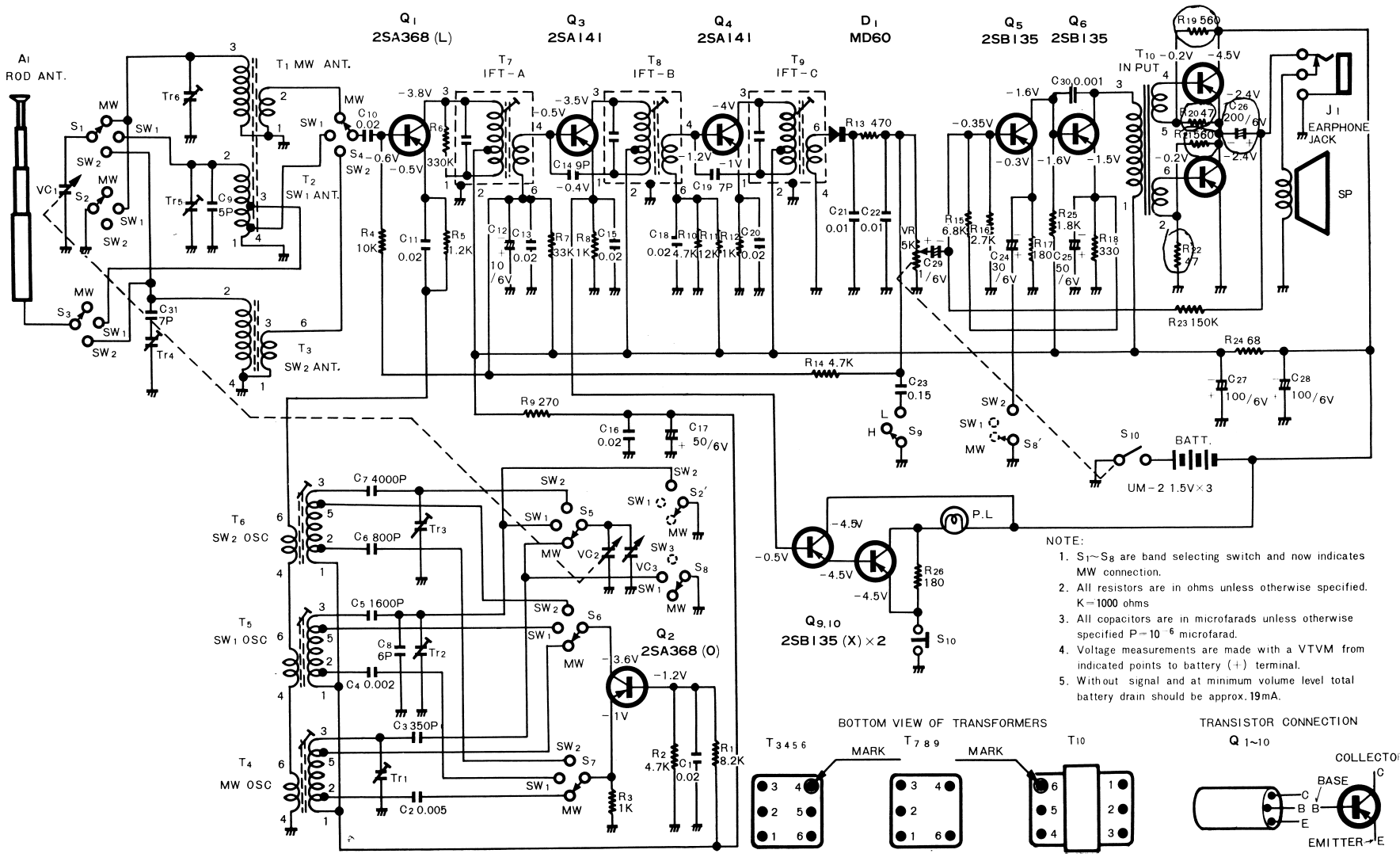

NOTE:

1. S_1~S_8 are band selecting switch and now indicates MW connection.
2. All resistors are in ohms unless otherwise specified. K=1000 ohms
3. All copacitors are in microfarads unless otherwise specified P=10^{-6} microfarad.
4. Voltage measurements are made with a VTVM from indicated points to battery (+) terminal.
5. Without signal and at minimum volume level total battery drain should be approx. 19mA.

MITSUBISHI

TRANSISTOR RADIO

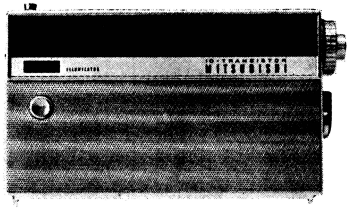

MODEL: 10X-718T

SERVICE NOTE

MITSUBISHI ELECTRIC CORPORATION

SPECIFICATIONS

Circuit System:	3-band 10-transistor superheterodyne
Frequency Range:	MW 525~1605 kc
	SW_1 2.3~ 6.0 Mc
	SW_2 6.0~18.0 Mc
Intermediate Frequency:	455 kc
Output:	Undistorted 250 mW
	Maximum 300 mW
Power Source:	Batteries 4.5 V
	Three flash-light type "C" cells or UM-2 batteries (JAPAN)
Loud Speaker:	2¾″ (7 cm) permanent dynamic speaker (coil imp. 8 Ω)
Antenna:	MW and SW_1: Built-in ferrite-core antenna
	⅜″ φ × 6¼″ (10 φ × 160 mm)
	SW_2: Built-in telescopic rod antenna
	9 steps, 2′ 7½″ (80 cm)
Earphone:	Magnetic type (8 Ω)
Transistors:	2SA368(L) Mixer
	2SA368(0) Local oscillator
	2SA141 IF amp.
	2SA141 〃
	2SB135 AF amp.
	2SB135 AF driver
	2SB457(A) Power amp. (push-pull)
	2SB457(A) 〃 〃
	2SB135 Illumicator switching
	2SB135 〃
Diode:	MD60 Detector
Outside Dimensions:	Width 8″ (200 mm) Height 4⅝″ (119 mm) Depth 1⅞″ (47 mm)
Weight:	1 lb 14 ozs (860 g) (including batteries)

ALIGNMENT REQUIREMENT

SIGNAL GENERATOR—Use generator which provides 455 kc and 500 kc~19 Mc frequencies. Signal output should be modulated 30 %. Keep output low enough to just give an indication to avoid AGC action.

INDICATOR—Connect a VTVM to the earphone jack by use of a plug or crips.

ALIGNMENT TOOL—Use a fiber or bakelite aligning tool that fits the slot in the screws of the trimmers and in the core of the oscillator coils or IFT to prevent possible body-effect or chipping of the slot.

RECEIVER—Set the volume control to maximam. Be sure during RF alignment that hand or any metal objects on bench do not come in close contact with antenna coil or detuning will occur and alignment will be incorrect.

ALIGNMENT PROCEDURE CHART

Step	Connect Signal Generator to	Band Selector	Generator Frequency	Dial (VC) Setting	Adjust for Maximum
1	Terminal of [Tr6] through 1~3pF capacitor	MW	455 kc	Maximum frequency	T_9, T_8 and T_7 in order and repeat
2			600 kc	600 kc	Osc. trans. T_4
3			〃	〃	Ant. coil T_1
4			1400 kc	1400 kc	Osc. trimmer Tr_1
5			〃	〃	Ant. trimmer Tr_6
6			Repeat step 2~5, until no further change is noted		
7	Rod antenna through 8pF capacitor	SW_1	2.3 Mc	2.3 Mc	Osc. coil T_5
8			〃	〃	Ant. coil T_2
9			6 Mc	6 Mc	Osc. trimmer Tr_2
10			6.91 Mc	〃	Increase generator output until image signal is heard. If not heard return to step 9 and Tr_2 must be rotated until another signal is heard.
11			6 Mc	〃	Ant. trimmer Tr_5
12			Repeat step 7~9 and 11, until no further change is noted		
13	〃	SW_2	6 Mc	6 Mc	Osc. coil T_6
14			〃	〃	Ant. coil T_3
15			18 Mc	18 Mc	Osc. trimmer Tr_3
16			18.91 Mc	〃	Increase generator output until image signal is heard. If not heard, return to step 15 and Tr_3 must be rotated until another signal is heard.
17			18 Mc	18 Mc	Ant. trimmer Tr_4
18			Repeat step 13~15 and 16, until no further change is noted		