SANYO

MODEL
10X-300

All-transistor Radio
Service Manual

SPECIFICATIONS

FREQUENCY RANGE

BC	530 – 1605Kc/s
SW1	1.5 – 4.5 Mc/s
SW2	4.3 – 12 Mc/s
SW3	12 – 26.1 Mc/s

INTERMEDIATE FREQUENCY
455Kc/s

POWER SUPPLY
9 volts (6 × size D flashlight batteries)

CURRENT DRAIN

no signal	21 mA
maximum	220 mA

POWER OUTPUT

undistorted	0.85Watt
maximum	1.4 Watt

S/N RATIO
36 dB (At 1,000 Kc/s., input 5 mV)

SENSITIVITY

BC	20 μV/m	(average for 50mW output)
SW1	20 μV/m	(average for 50mW output)
SW2	28 μV/m	(average for 50mW output)
SW3	4 μ	(average for 50mW output)

LOUD SPEAKER
5" × 7" oval permanent dynamic speaker (8 ohms)
4" permanent dynamic speaker (8 ohms)

TRANSISTORS

(1)	2SA222	Frequency converter
(2)	2SA223	Local oscillator
(3)	2SA322	1st IF amplifier
(4)	2SA203	2nd IF amplifier
(5)	2SB 185	AGC amplifier
(6)	2SB 185	1st AF amplifier
(7)	2SB 186	2nd AF amplifier
(8)	2SB 272 × 2	Pushpull power amplifier
(9)	2SB 185	Pre-amplifier

DIODE & THERMISTER

(1)	1S188 Diode	Detector
(2)	SDT-06 Thermistor	Temperature compensator

DIMENSIONS

Width	18 inches
Height	11 inches
Depth	7½ inches

WEIGHT
12½ lbs (Excluding batteries)

SANYO ELECTRIC CO., LTD.

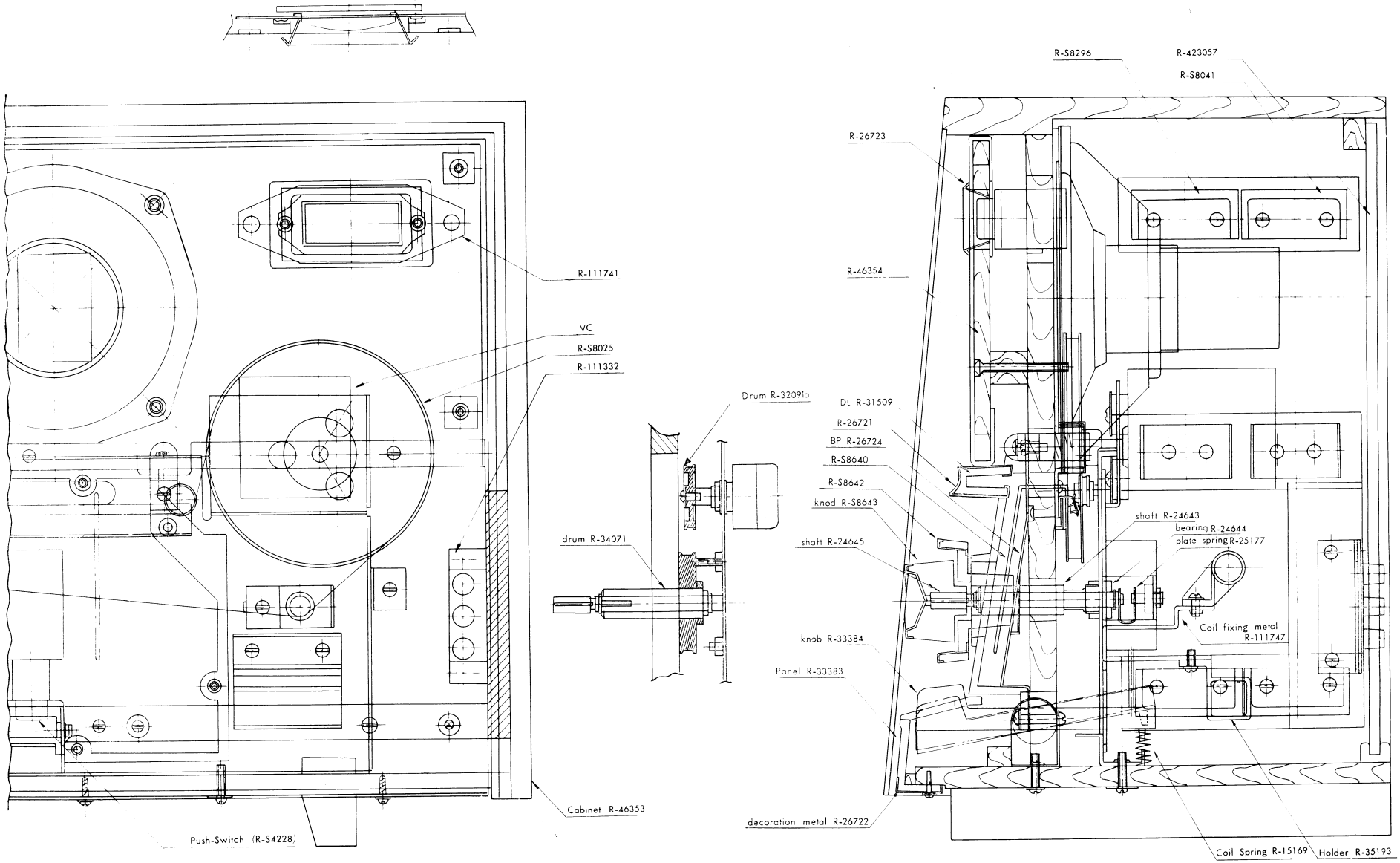

Printed in Japan

CIRCUIT DIAGRAM

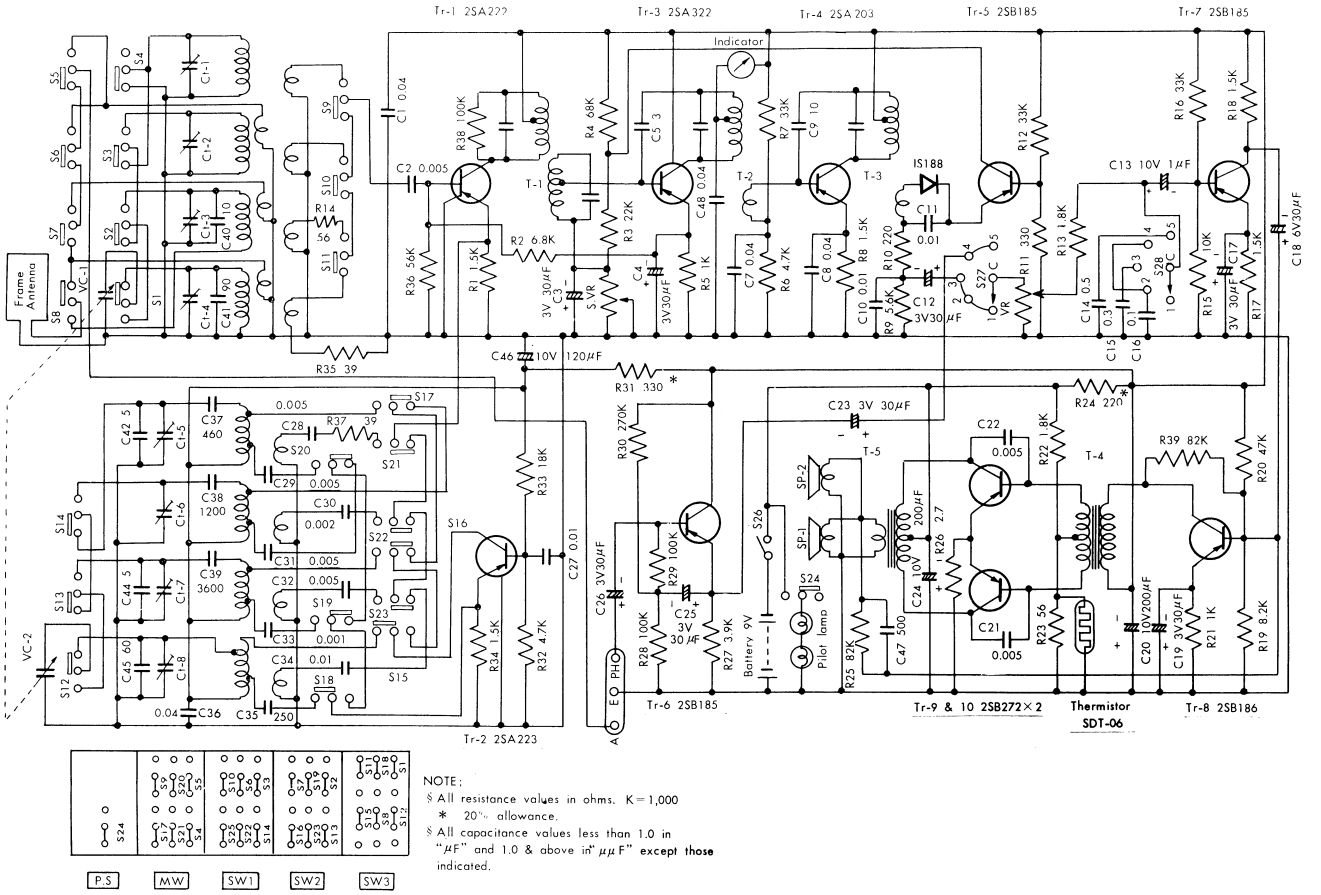

ALIGNMENT PROCEDURES

Apply volt-meter across the voice coil. Volume control should be at maximum position. Output of signal generator should be no higher than necessary to obtain output reading in order to avoid AGC function.

STEP	SIGNAL GENERATOR COUPLING	SIGNAL GENERATOR FREQUENCY	RADIO DIAL SETTING	ADJUST FOR MAXIMUM OUTPUT
IF ALIGNMENT (IN BC RECEPTION)				
1	Radiate signal through the loop antenna coil, which connected with signal generator output cable.	455 Kc	lower end	IF trans. T 3 IF trans. T 2 IF trans. T 1
BROADCAST RF ALIGNMENT				
2	Radiate signal through the loop antenna, which conncted with signal generator output cable.	520 Kc	lower end	BC OSC Coil L15
3		1,650 Kc	upper end	BC OSC Trim. Ct5
4			Repeat steps 2 and 3.	
5		600 Kc	600 Kc	BC Ant. Coil L1
6		1,400 Kc	1,400 Kc	BC Ant. Trim. Ct1
7			Repeat steps 5 and 6.	

SHORTWAVE 1 RF ALIGNMENT

8	Radiate signal through the loop antenna, which connected with signal generator output cable.	1.4 mc	lower end	SW1 OSC Coil L6
9		4.5 mc	upper end	SW1 OSC Trim. Ct6
10		Repeat steps 8 and 9.		
11		1.6 mc	1.6 mc	SW1 Ant. Coil L2
12		4.0 mc	4.0 mc	SW1 Ant. Trim. Ct2
13		Repeat steps 11 and 12.		

SHORTWAVE 2 RF ALIGNMENT

14	Radiate signal through the loop antenna, which connected with signal generator output cable.	4.1 mc	lower end	SW2 OSC Coil L7
15		4.1 mc	upper end	SW2 OSC Trim. Ct7
16		Repeat steps 14 and 15.		
17		4.5 mc	4.5 mc	SW2 Ant. Coil L3
18		11.0 mc	11.0 mc	SW2 Ant. Trim. Ct3
19		Repeat steps 17 and 18.		

SHORTWAVE 3 RF ALIGNMENT

20	Inject signal through the dummy antenna, which connector with signal generator output cable.	11.0 mc	lower end	SW3 OSC Coil L8
21		26.8 mc	upper end	SW3 OSC Trim. Ct8
22		Repeat steps 20 and 21		
23		12.0 mc	12.0 mc	SW3 Ant. Coil L4
24		26.0 mc	12.0 mc	SW3 Ant. Trim. Ct4
25		Repeat steps 23 and 24.		

S.VR ADJUSTMENT Connect a mili–ammeter in place of indicator.
Adjust S.VR for 400μA meter reading.

PARTS CONNECTION

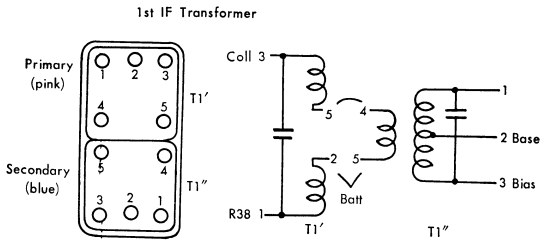

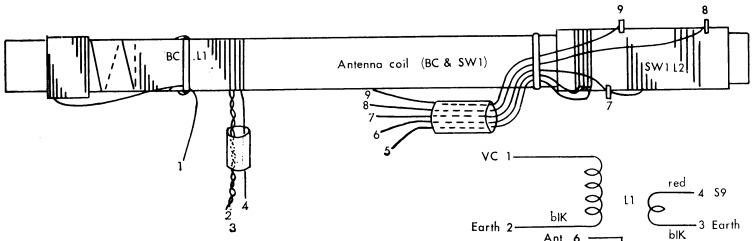

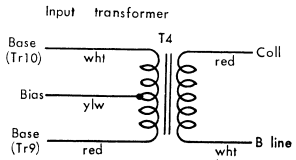

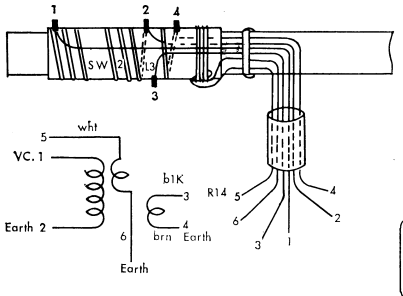

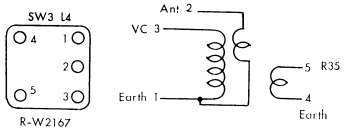

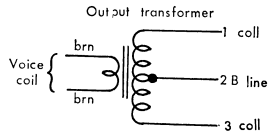

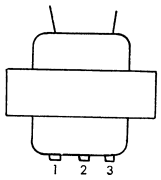

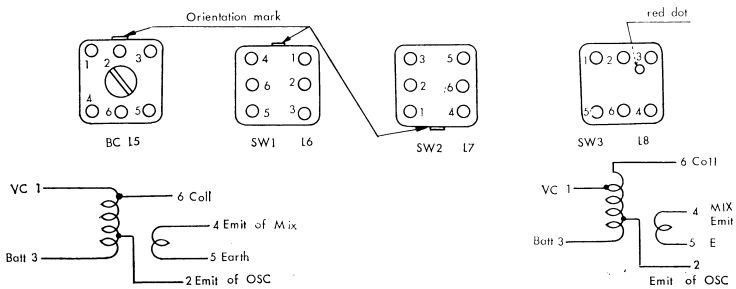

L5, L6, L7

MAIN PARTS LAYOUT

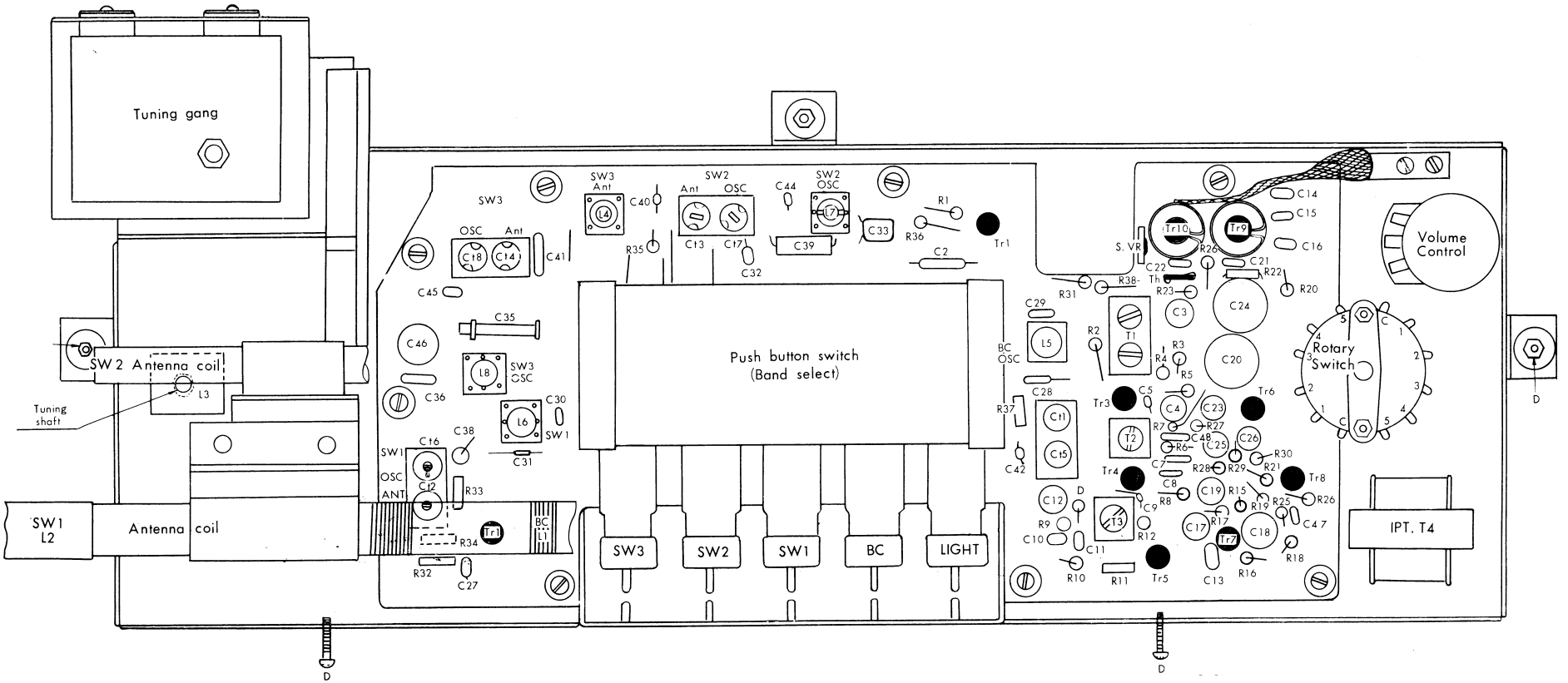

INTER-PARTS WIRING ILLUSTRATIONS

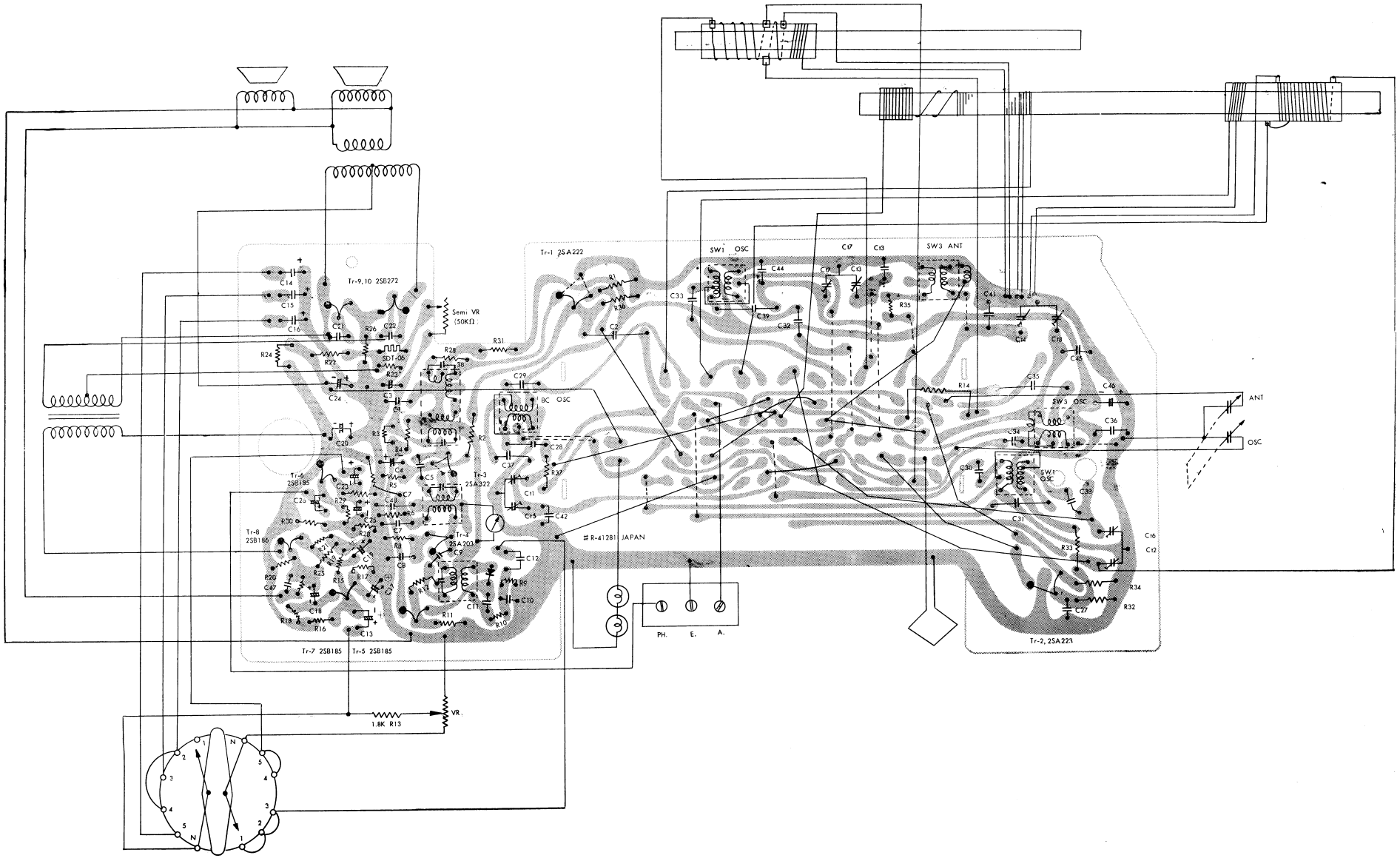

PART NO.	STOCK NO.	DESCRIPTION

TRANSISTORS

Tr 1	2SA222	Mixer
Tr 2	2SA223	Local oscillator
Tr 3	2SA322	1st IF amplifier
Tr 4	2SA203	2nd IF amplifier
Tr 5	2SB185	AGC amplifier
Tr 6	2SB185	1st AF amplifier
Tr 7	2SB186	2nd AF amplifier
Tr 8	2SB185	Pre amplifier
Tr 9, 10	2SB272	Power amplifier

THERMISTOR & DIODES

	SDT-06	Temperature compensator
	1S188	Detector

COILS

L1, L2	R-W2165	Antenna coil BC & SW1
L 3	R-W2166	Antenna coil SW2
L 4	R-W2167	Antenna coil SW3
L 5	R-W8095	Oscillator coil BC
L 6	R-W8096	Oscillator coil SW1
L 7	RW-8097	Oscillator coil SW2
L 8	RW-8098	Osciliator coil SW3

TRANSFORMERS

T 1	R-W5T119	1st IF Transformer
T 2	R-W5T009	2nd IF Transformer
T 3	R-W5T043	3rd IF Transformer
T 4	R-W6134	Input Transformer 3.5K : 1.5Kohms
T 5	R-W6205	Output Transformer

CONTROLS

	R-S4228	Band selector
	R-S4229	Rotary switch
	R-C1051	Tuning capacitor
	R-C1071	Tuning caqacitor
	R-R12491	On Off & Volume control
	R-R11010	Semi-fixed resistor
	R-S5044	Pilot light
	R-C0013	Trimmer
	R-C0030	Trimmer
	R-C0039a	Trimmer

LOUD SPEAKER

SP	R-S6231	Speaker
SP	R-S5201	Speaker

PART NO.	STOCK NO.	DESCRIPTION

ELECTROLYTIC CAPACITORS

C 3		30μF 3WV
C 4		30μF 3WV
C 12		30μF 3WV
C 13		1μF 10WV
C 14		0.5μF 6WV
C 15		0.3μF 6WV
C 16		0.1μF 6WV
C 17		30μF 3WV
C 18		30μF 6WV
C 19		30μF 3WV
C 20		200μF 10WV
C 23		30μF 3WV
C 24		200μF 10WV
C 25		30μF 6WV
C 26		30μF 6WV
C 46		120μF 10WV

FIXED CAPACITORS

C 1		0.04 μF +80−20% 50WV
C 2		0.005μF +30−20% 50WV
C 5		3pF ±0.5pF 50WV
C 6		
C 7		0.04 μF +80−20% 50WV
C 8		0.04 μF +80−20% 50WV
C 9		10 pF ±10% 50WV
C 10		0.01 μF +30−20% 50WV
C 11		0.01 μF +20−30% 50WV
C 21		0.005μF +30−20% 50WV
C 22		0.005μF +30−20% 50WV
C 27		0.01 μF +30−20% 50WV
C 28		0.005μF +30−20% 50WV
C 29		0.005μF +30−20% 50WV
C 30		0.002μF +30−20% 50WV
C 31		0.005μF +30−20% 50WV
C 32		0.005μF +30−20% 50WV
C 33		0.001μF +30−20% 50WV
C 34		0.01 μF +30−20% 50WV
C 35		250pF ±10% 250WV
C 36		0.04 μF +80−20% 50WV
C 37		460pF ±3.5% 250WV
C 38		1200pF ±10% 35WV
C 39		3600pF ±10% 35WV
C 40		10pF ±10% 50WV
C 41		90pF ±10% 500WV
C 42		5pF ±10% 50WV
C 43		
C 44		5pF ±10% 50WV
C 45		60pF ±10% 500WV
C 47		500pF +30−20% 50WV

PART NO.	STOCK NO.	DESCRIPTION

FIXED RESISTORS

R	1		1.5K ohms ±10% ¼W
R	2		6.8K ohms ±10% ¼W
R	3		22K ohms ±10% ¼ or ½W
R	4		68K ohms ±10% ¼ or ½W
R	5		1K ohms ±10% ½ or ¼W
R	6		4.7K ohms ±10% ½ or ¼W
R	7		33K ohms ±10% ½ or ¼W
R	8		1.5K ohms ±10% ½ or ¼W
R	9		5.6K ohms ±10% ½ or ¼W
R	10		220 ohms ±10% ½ or ¼W
R	11		330 ohms ±10% ½ or ¼W
R	12		33K ohms ±10% ½ or ¼W
R	13		1.8K ohms ±10% ½ or ¼W
R	14		56 ohms ±10% ¼W
R	15		10K ohms ±10% ½ or ¼W
R	16		33K ohms ±10% ½ or ¼W
R	17		1.5K ohms ±10% ½ or ¼W
R	18		1.5K ohms ±10% ½ or ¼W
R	19		8.2K ohms ±10% ½ or ¼W
R	20		47K ohms ±10% ½ or ¼W
R	21		1K ohms ±10% ¼ or ½W
R	22		1.8K ohms ±10% ¼ or ½W
R	23		56 ohms ±10% ¼ or ½W
R	24		220 ohms ±20% ½W
R	25		82K ohms ±10% ¼ or ½W
R	26		2.7 ohms ±10% ¼ or ½W
R	27		3.9K ohms ±10% ¼ or ½W
R	28		100K ohms ±10% ¼ or ½W
R	29		100K ohms ±10% ¼ or ½W
R	30		270K ohms ±10% ¼ or ½W
R	31		330 ohms ±20% ½W
R	32		4.7K ohms ±00% ¼W
R	33		18K ohms ±10% ¼W
R	34		1.5K ohms ±10% ¼W
R	35		39 ohms ±10% ¼W
R	36		56K ohms ±10% ¼W
R	37		39 ohms ±10% ¼ or ½W
R	38		100K ohms ±10% ¼W
R	39		82K ohms ±10% ¼ or ½W

PART NO.	STOCK NO.	DESCRIPTION

CABINET

	R-46353	Cabinet
	R-46354	Buffle plate
	R-33383	Panel
	R-31509	DL panel
	R-26721	Decoration metal
	R-26722a	Decoration metal
	R-26723	Decoration metal for Indicator
	R-111741	Fixing metal
	R-26724a	Back screen
	R-32338	Badge
	R-21029	Badge -SANYO-Hi-Fi
	R-111332	Fixing metal for terminal
	R-S8640	Pointer
	R-111331a	Rail
	R-S8642	Knob (comp.)
	R-S8643	Knob (comp.)
	R-423057	back cover
	R-35170	Battery cover
	R-42133	Battery instruction sheet

MISCELLANEOUS

	R-24643	Shaft
	R-24644	Bearing
	R-111746	Fixing metal
	R-111747	Fixing metal for coil
	R-25177a	Plate Spring
	R-S8025	Drum (comp.)
	R-24646	Shaft
	R-34004	Pulley
	R-24145	Pulley shaft
	R-32091a	Drum
	R-S4228	Push switch
	R-S4229	Rotary switch
	R-S3099	terminal switch
	R-S8169a	Battery case (comp.)
	R-25053	Coil spring
	R-111865	Battery holder
	R-111866	Battery holder
	R-111864	Battery holder
	R-12059	Speed washer
		Rope 0.5ϕ

SPECIFICATIONS SUBJECT TO CHANGE WITHOUT NOTICE.