SANYO

Sanyo Sounds Exciting!

All-transistor 3-band Radio

MODEL 10U-P10

SERVICE MANUAL

SANYO ELECTRIC CO., LTD.

INTERNATIONAL DIVISION: SANYO ELECTRIC TRADING CO., LTD.
OSAKA JAPAN

SPECIFICATIONS

Frequency Range	MW	530 - 1605 KHz
	SW_1	2.3 - 7.3 MHz
	SW_2	8.0 - 22.0 MHz
Intermediate Frequency		455 KHz
Sensitivity (for 50mW output)	MW	40 μV/m
	SW_1	30μV/m
	SW_2	5 μV
Output Power	Maximum	800 mW
	Undistorted	500 mW
Power Supply		DC 6V; 4 "D" size flash-light batteries or AC adaptor thru 6V jack
Current Drain	No signal	15 mA
	Maximum	240 mA
Speaker		3½" permanent dynamic type 8 ohm voice coil impedance
Dimensions		9¼" wide x 5" high x 2" deep
Weight		1.6 lbs. (750 gr.)

ALIGNMENT PROCEDURES

Collector Current Adjustment

Apply DC 6 volts across the battery terminals and set the band select switch into MW position. Operate the radio and adjust the semifixed resistor so as to make 300μA current circulate thru collector of the transistor (Tr3 2SA101 x). This adjustment is completed when the pointor of indicator deflects and points the center between two letters ("OK").

RF and IF Alignment

PROCEDURES	POSITION OF BAND SWITCH	SIGNAL INPUT	FREQUENCY OF SIGNAL GEN.	DIAL SETTING OF RADIO	COMPONENTS TO BE ADJUSTED FOR MAXIMUM OUTPUT
IF STAGE	MW	IRE LOOP	455 KHz	Lowest End	IF Transformers: T3, T2 & T1
MW BAND	MW	IRE LOOP	570 KHz	570 KHz	Osc. Coil L3 & Ant. Coil Lla
	MW	IRE LOOP	1650 KHz	1650 KHz	Osc. Trim Ct4 & Ant. Trim Ct1
SW_1 BAND	SW_1	IRE LOOP	2.5 MHz	2.5 MHz	Osc. Coil L4 & Ant. Coil Llb
	SW_1	IRE LOOP	6.5 MHz	6.5 MHz	Osc. Trim Ct5 & Ant. Trim Ct2
SW_2 BAND	SW_2	DUMMY ANTENNA	8.5 MHz	8.5 MHz	Osc. Coil L5 & Ant. Coil L2
	SW_2	DUMMY ANTENNA	21.0 MHz	21.0 MHz	Osc. Trim Ct6 & Ant. Trim Ct3

PARTS LIST

SCHEMATIC LOCATION	PART NO.	DESCRIPTION
FIXED VALUE RESISTORS		
All resistors are of ¼ watt type with 10% allowance		
R1	R-R105K	1M ohms
R2 R17	R-R562K	5.6K ohms
R3 R18	R-R221K	220 ohms
R4	R-R183K	18K ohms
R5 R14	R-R472K	4.7K ohms
R6	R-R222K	2.2K ohms
R7	R-R680K	68 ohms
R8	R-R470K	47 ohms
R9	R-R181K	180 ohms
R10	R-R123K	12K ohms
R11	R-R681K	680 ohms
R12 R30	R-R182K	1.8K ohms
R13	R-R392K	3.9K ohms
R15	R-R273K	27K ohms
R16	R-R821K	820 ohms
R19 R28	R-R331K	330 ohms
R20 R27	R-R563K	56K ohms
R21	R-R391K	390 ohms
R22	R-R223K	22K ohms
R23	R-R102K	1K ohms
R24	R-R683K	68K ohms
R25 R31	R-R151K	150 ohms
R26	R-R822K	8.2K ohms
R29	R-R101K	100 ohms
R32	R-R2N2K	2.2 ohms
R33	R-R104K	100K ohms
R34	R-R154K	150K ohms

SCHEMATIC LOCATION	PART NO.	DESCRIPTION		
FIXED VALUE CAPACITORS				
C1	R-CKD050K	Ceramic	5pF	±10%
C2 C7 C13	R-CKD100K	Ceramic	10pF	±10%
C3	R-CKD200K	Ceramic	20pF	±10%
C4	R-CQS103M	Mylar	0.01μF	±20%
C5 C19 C21 C23 C34	R-CKD203Z	Ceramic	0.02μF	+80%
C6	R-CQS402M	Mylar	0.004μF	±20%
C9	R-CQT311K	Styrol	310pF	±10%
C10	R-CQS202M	Mylar	0.002μF	±20%
C11	R-CQS152M	Mylar	0.0015μF	±20%
C12	R-CKD102Z	Ceramic	0.001μF	+80%
C14	R-CQT432K	Styrol	4300pF	±10%
C15	R-CQT122K	Styrol	1200pF	±10%
C20 C24 C25	R-CKD103Z	Ceramic	0.01μF	+80%
C31 C32	R-CQS203M	Mylar	0.02μF	±20%
C34	R-CKD150K	Ceramic	15pF	±10%
C28	R-CQS252M	Mylar	0.0025μF	±20%
ELECTROLYTIC CAPACITORS				
C7	R-C9132	10μF	3V	
C8 C30	R-C9136	100μF	6V	
C16	R-C9131	5μF	6V	
C22 C29	R-C9137	30μF	6V	
C26	R-C9115	1μF	10V	
C27	R-C9126	0.1μF	10V	
C33	R-C9832	50μF	10V	

October, 1968 Printed in Japan

SCHEMATIC DIAGRAM

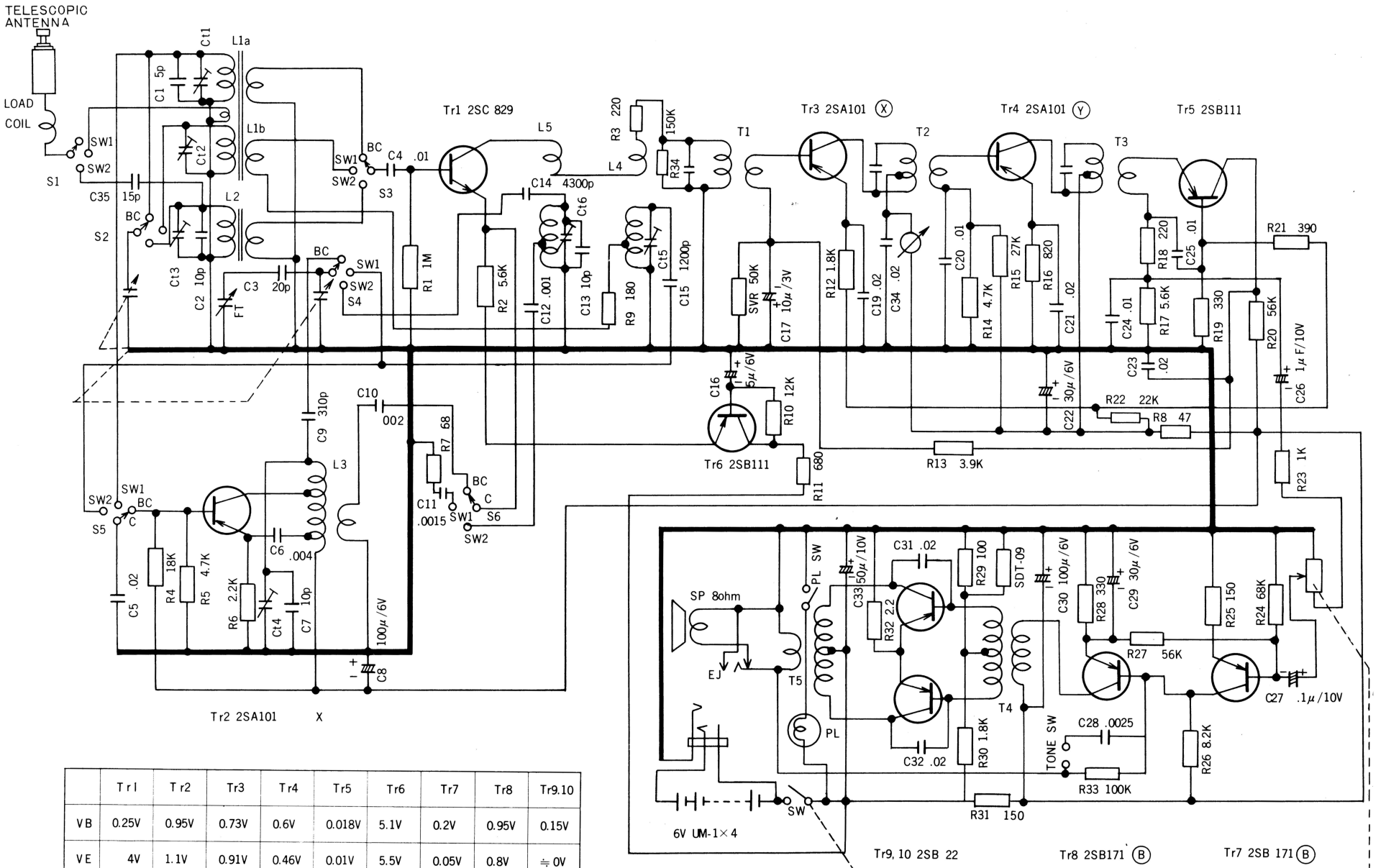

	Tr1	Tr2	Tr3	Tr4	Tr5	Tr6	Tr7	Tr8	Tr9.10
VB	0.25V	0.95V	0.73V	0.6V	0.018V	5.1V	0.2V	0.95V	0.15V
VE	4V	1.1V	0.91V	0.46V	0.01V	5.5V	0.05V	0.8V	≒0V
VC	.005V	5.2V	5.0V	5.2V	0.9V	5.8V	0.95V	4.8V	6V
IC	255μA	540μA	300μA	600μA	68μA	250μA	500μA	2.6mA	5mA

PARTS LIST

PARTS NO.	DESCRIPTION		Q'TY
PACKAGE			
R-471803	Instruction Book		1
R-48227	Carrying Case		1
R-48198	Earphone Case		1
R-48210	Strap		1
R-491259	Individual Carton		1
R-41747	Foam-plastic Cushion		2
HOUSING			
R-A1010	Housing Assembly		1
R-A311021	Front Housing Assembly		1
R-311021	Front Housing		1
R-32823	Dial Escutcheon		1
R-12059	Speed Washer	– dial escutcheon mtg	6
R-311023	Dial Scale		1
R-262053	Grille Metal	– speaker grille	1
R-43160	Black Himeron Net		1
R-262054	Badge	"SANYO"	1
R-A311022	Back Housing Assembly		1
R-311022	Back Housing		1
R-262055	Specification Metal		1
R-241532	Pointor		1
R-262056	Back Screen	– behind dial	1
R-S81529	Tuning Knob		1
R-31848	Volume Knob		1
R-33376	Fine Tuning Knob		1
R-325387	Band Select Knob		1
R-35170	Battery Holder Tube		1
R-355233	Take-out Tab		1
R-24399	Screw	– back cover mtg	1
R-424414	Paper Cover	– chassis	1
R-44317	Paper Cover	– tone control switch	1
CHASSIS			
R-241531	Tuning Shaft		1
R-39451	Drum		1
R-445081	Cushion	– tuning capacitor mtg	1
R-15041	Tension Spring		1
R-	Dial Cord	tetron 0.5ϕ 750mm	1
R-39459	Chassis (plastic)		1
R-241583	Pulley Shaft		1
R-241584	Pulley Shaft (W/ Hex. Nut)		1
R-27065	Pulley		2
R-27062	Pulley		1
R-12059	Speed Washer	– back screen mtg	2
R-35324	Holder	– antenna coil mtg	1
R-41726	Printed Circuit Board		1
R-24099	Stud Nut	– P.C.Board mtg	1
R-	Rubber Washer 13ϕx4ϕx2t	– pilot lamp mtg	1

SCHEMATIC LOCATION	PART NO.	DESCRIPTION	
TRANSISTORS			
Tr1	2SC829	Transistor	
Tr2 Tr3	2SA101 x	Transistor	
Tr4	2SA101 Y	Transistor	
Tr5 Tr6	2SB111	Transistor	
Tr7 Tr8	2SB171B	Transistor	
Tr9 Tr10	2SB22	Transistor (W/ R1 type cooling fin)	
	SDT-09	Thermistor	
COILS & TRANSFORMERS			
Lla Llb	R-S81735	Antenna Coil	MW & SW_1
L2	R-W2387	Antenna Coil	SW_2
L3	R-W8118b	Oscillator Coil	MW
L4	R-W8160	Oscillator Coil	SW_1
L5	R-W8279	Oscillator Coil	SW_2
T1	R-W5T008	IF Transformer	
T2	R-W5T239	IF Transformer	
T3	R-W5T327-3	IF Transformer	
T4	R-W6226-2	Input Transformer	
T5	R-W6275	Output Transformer	
LOAD	R-W1076	Choke Coil	5μH ± 5%
CONTROLS			
Cvla Cvlb	R-C1025	Variable Capacitor	– main tuning
Cv2	R-C1096	Variable Capacitor	– fine tuning
	R-R11674	Variable Resistor 10K	– volume control
	R-R11010	Semi-fixed Resistor 50K	
Ct5 Ct6	R-C0046 or R-C0030	Trimmer Capacitor	
Ct1 Ct4	R-C0034 or R-C0045a	Trimmer Capacitor	
S1 S6	R-S4321	Slide Switch	– band select
TONE SW	R-S4341a	Slide Switch	– tone control
PL SW	R-S4425a	Push Switch	– pilot lamp
TRANSDUCERS			
SP	R-S6474	Speaker	3½" 8 ohms 1W
	R-S6365	Earphone	
MISCELLANEOUS			
	R-S5542-1	Meter	
PL	R-S1202	Pilot Lamp	
	R-S1359	Telescopic Antenna	– 9-stages, 833mm long
	R-251546	Lug Terminal	– telescopic antenna
	R-24372	Connector Tip	– telescopic antenna
EJ	R-S2173a	Jack	– earphone
	R-113386	Battery Terminal	– positive side
	R-S81706	Battery Terminal	– composite (+) & (–)
	R-15332	Taper Spring	– negative terminal

INTER-PARTS WIRING

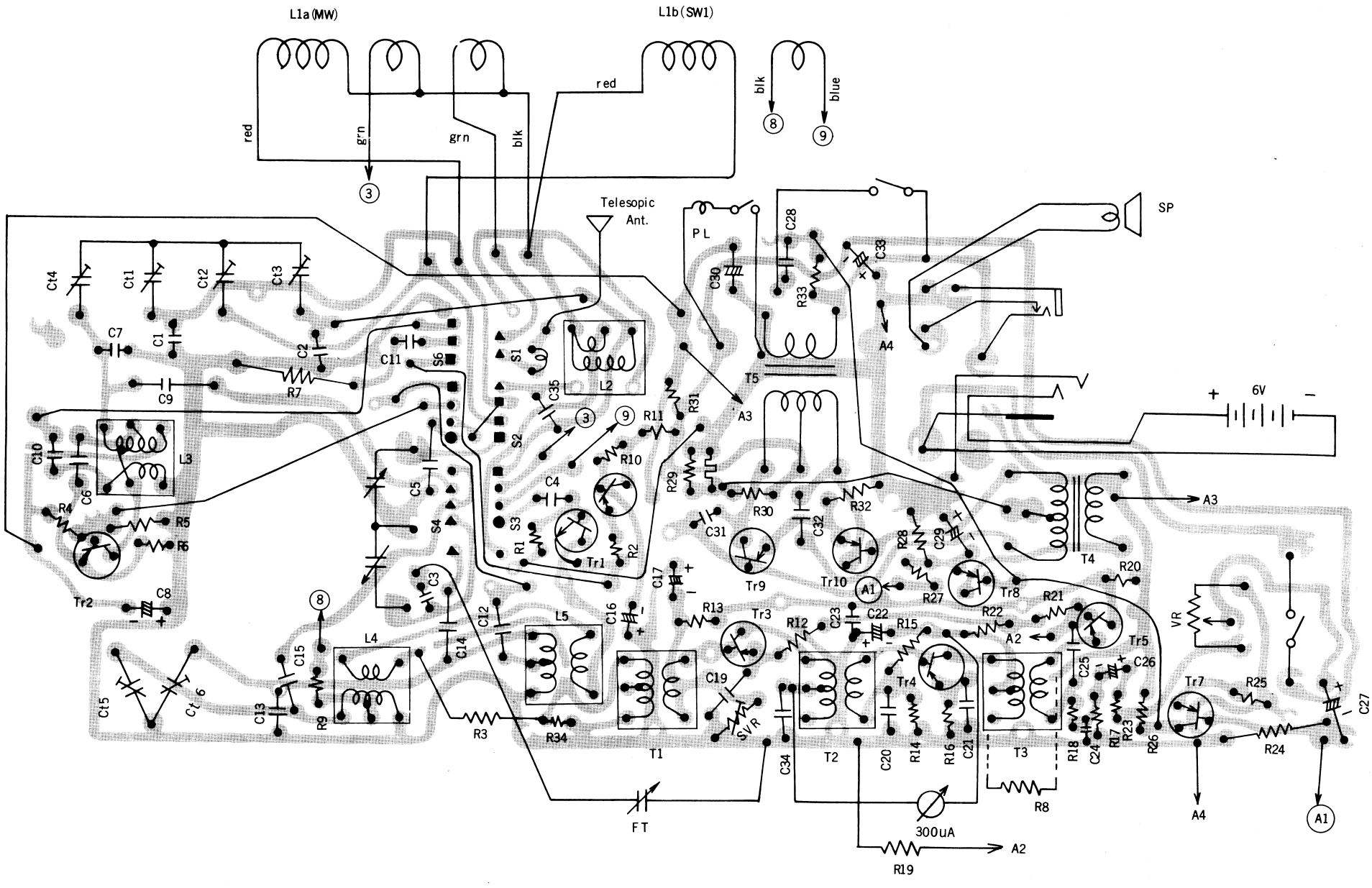

MAIN PARTS IDENTIFICATION

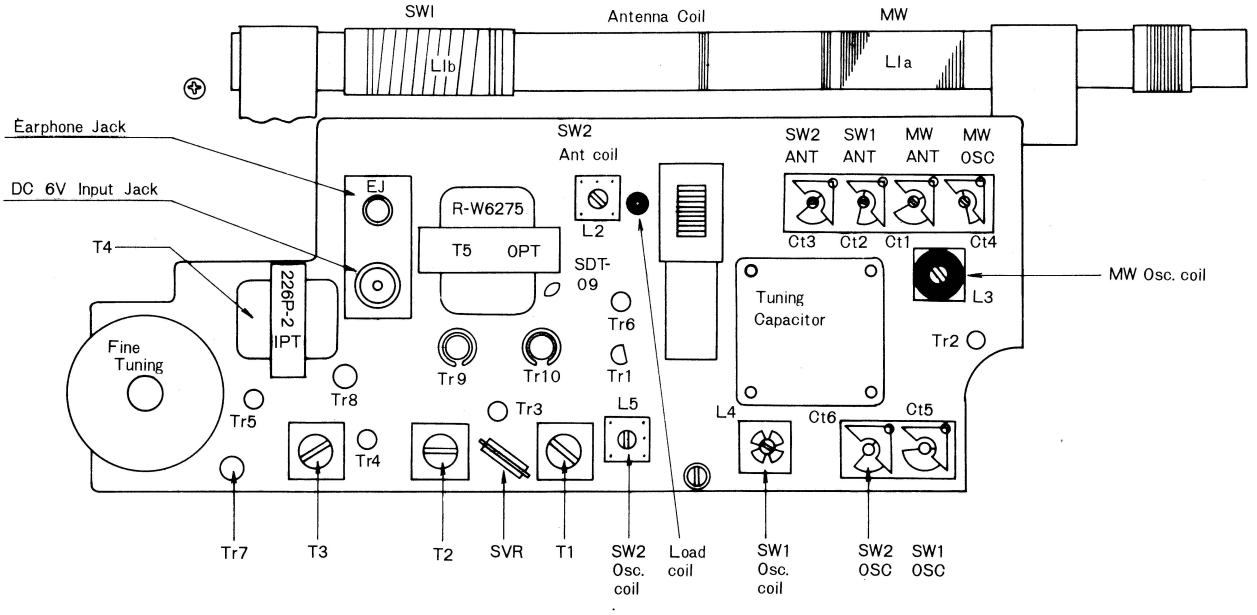

DIAL CORD STRINGING

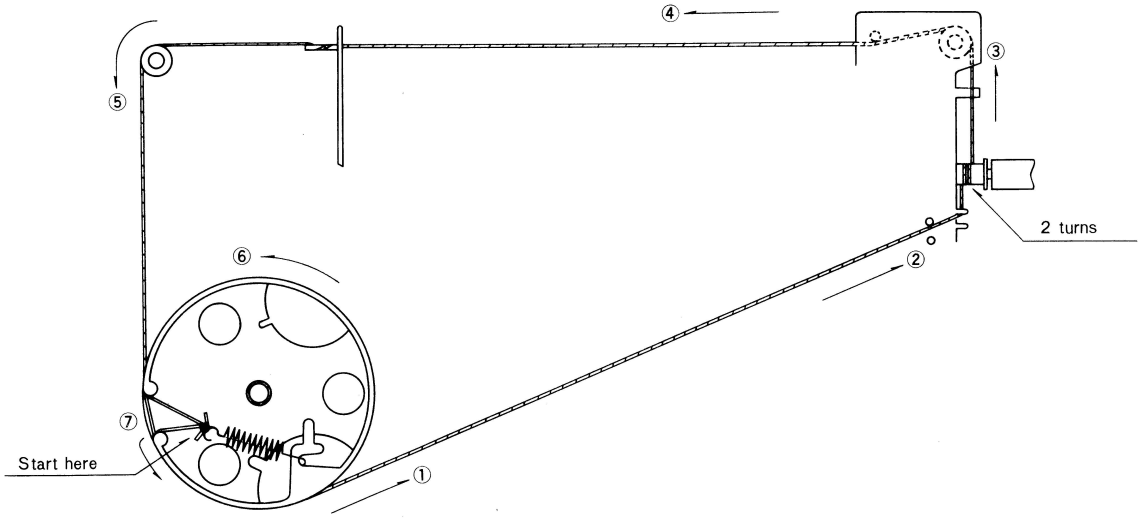

HOW TO TAKE OUT CHASSIS

1. Loosen a screw on back housing and dismantle back housing from front housing.
2. Remove a stud nut which fixes the printed circuit board on its center.
3. Remove two (2) screws marked in red on their heads, which fix chassis onto front housing.
4. Take out chassis from housing and disconnect jumper leads if necessary.