TECHNICAL INFORMATION AND SERVICE DATA

MANUFACTURERS AWA SUPERVISED SERVICE

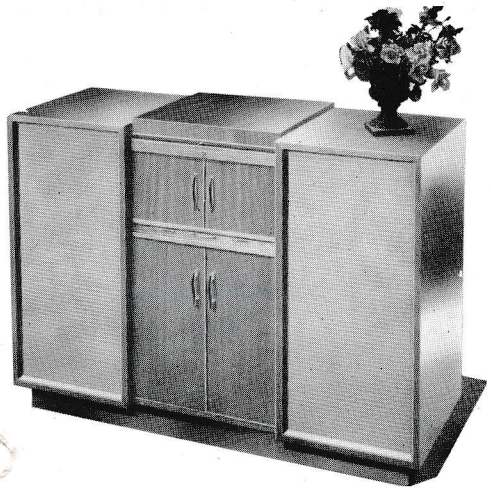

RADIOLAGRAM

MODEL 1091 GA.

TEN VALVE, TWO BAND, A.C. OPERATED SUPERHETERODYNE

ISSUED BY AMALGAMATED WIRELESS (AUSTRALASIA) LTD.

GENERAL DESCRIPTION

Model 1091-GA is a Ten-Valve, A.C.-operated, Dual Wave, High-Fidelity Radiogram.

Included in its many attractive features are:—Three separate chassis, tuner, high-frequency and low-frequency amplifiers, two matched-speaker enclosures containing six loudspeakers, separate bass and treble controls providing both attenuation and boost, broad and narrow band Broadcast reception, non-resonant crossover system in each amplifier, and finally, a high performance four-speed record changer possessing several unique features.

ELECTRICAL AND MECHANICAL SPECIFICATIONS

Frequency Ranges:

Medium Wave	540 — 1600 Kc/s. (555 — 187.5 Metres)
Short Wave	6 — 18 Mc/s. (50 — 16 Metres)
Intermediate Frequency	455 Kc/s.
Power Supply Rating	200 — 260 volts 50 c/s.
Power Consumption	On Radio — 110 watts. On Phonogram — 125 watts.
Dial Lamps	6.3 volts, 0.25 amp. M.E.S.

Valve Complement

- 6BE6 Converter
- 6N8 I.F. Amplifier and Detector
- Z729/6BK8 Audio Amplifier
- 6AU6 H.F. Amplifier
- 6AQ5 H.F. Output
- 6X4 Rectifier
- 12AX7 Amplifier and Phase-Splitter
- 6V6GT } Push-pull Output
- 6V6GT }
- 5Y3GT Rectifier

Loudspeakers

- 2 — 12 inch permanent magnet No. 21586M
- 1 — 4 inch permanent magnet No. 21534M
- 1 — 4 inch permanent magnet No. 21588M
- 2 — 2½ inch permanent magnet No. 21536M

Dial Cord Replacement:

The following diagram indicates the procedure for assembling Dial Cord No. 32812/6 on the tuner chassis in the event of cord breakage or gang replacement.

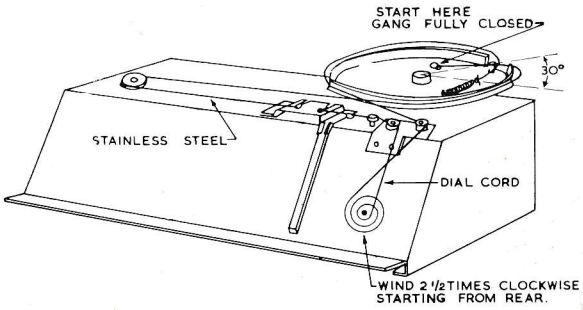

Connection to Power Supply:

The receiver should not be connected to any circuit supplying other than alternating current from 200-260 volts at a frequency of 50 c/s. The following diagrams show the voltage taps on the power transformers in each amplifier chassis.

D.C. RESISTANCE OF WINDINGS

Winding	D.C. Resistance in ohms
I.F. Filter Coil L1	9.5
Aerial B/C. Coil T1.	
Primary (2-5)	13
Secondary (1-4)	1.8
Aerial S/W. Coil T2.	
Primary (1-4)	2.5
Secondary (2-3)	*
S/W. Oscillator Coil T3.	
Primary (1-4)	*
Secondary (2-3)	*
B/C. Oscillator Coil L2	3.5
I.F. Transformer Windings T4 and T5	18
I.F. Transformer Windings T6	13
Audio Output Transformer T101.	
Primary (1-3)	420
Secondary (5-8)	*
Power Output Transformer T102.	
Primary (2-4)	55
Secondary (H.T.)	420
Secondary (L.T.)	*
H.T. Choke L101	1000
Audio Output Transformer T201.	
Primary (1-3)	500
Secondary (7-8)	1.2
Power Transformer T202.	
Primary	22
Secondary (H.T.)	270
Secondary (L.T.)	*
H.T. Choke L201	100

* Less than 1 ohm.

The above measurements were taken on a standard chassis, but substitution of materials during manufacture may cause variations, and it should not be assumed that a component is faulty if slightly different readings are obtained.

MECHANICAL REPLACEMENT PARTS

Item	Part No.
Bracket, Tuning Spindle	33387
Cabinet	37756
Chain, Volume Control	37346
Clamp, Power Lead	21915
Dial Scale	32294
Drive Drum Assembly	34123
Grommet	33389
Instruction Book	37316
Knob Assembly, Bass	37370
Knob Assembly, Treble and Range Selector	37368
Knob Assembly, Tuning	37369
Knob Assembly, Volume	37365
Pointer Assembly	33979
Pulley, Large	7885
Pulley, Small	17716
Retainer, Socket	492080
Screw, Osc. Coil Mounting	31373
Socket, Pilot Light	35092
Spring, Drive Cord	1741
Spindle Volume Control	37311
Sprocket Wheel Volume Control	6349

When ordering, always quote the above part or code numbers, and in the case of coloured parts such as cabinets, etc., the colour plus the part number.

ADDENDUM:

The following circuit has been added in parallel with R110 and C108:—

C112	0.0012 μF $\pm$ 5% mica	
R115	2.7K ohms $\pm$ 10% $\frac{1}{2}$ watt	
L102	Choke	31799

Alignment Procedure:

Manufacturer's Setting of Adjustments.

The receiver is tested by the manufacturer with precision instruments and all adjusting screws are sealed. Re-alignment should be necessary only when components in tuned circuits are repaired or replaced, or when it is found that the seals over the adjusting screws have been broken.

It is especially important that the adjustments should not be altered unless in association with the correct testing instruments listed below.

Under no circumstances should the plates of ganged tuning capacitor be bent, as the unit is accurately aligned during manufacture and cannot be re-adjusted unless by skilled operators using special equipment.

For all alignment operations, connect the "low" side of the signal generator to the receiver chassis and keep the generator output as low as possible to avoid A.V.C. action. Also, keep the volume control in the maximum clockwise position.

Testing Instruments:

(1) A.W.A. Junior Signal Generator, type 2R7003, or

(2) A.W.A. Modulated Oscillator, series J6726.

If the modulated oscillator is used, connect a 0.25 megohm non-inductive resistor across the output terminals, and for short-wave alignment, an additional 400 ohm non-inductive resistor in series with the "high" output lead of the instrument.

(3) A.W.A. Output Meter, type 2M8832.

NOTE: On the short-wave band the oscillator is working on the low side of the signal frequency; therefore, the image will now be heard if the receiver is tuned to a higher frequency than the signal. For example, if the receiver is tuned to receive a 16 Mc/s. signal, the image will be heard at 16.91 Mc/s. instead of the usual 15.09 Mc/s.

ALIGNMENT TABLE

Order	Connect "High" side of Generator to:	Tune Generator to:	Tune Receiver to:	Adjust for Maximum Peak Output:
Switch Receiver to Broadcast Narrow.				
1	Aerial Section of Gang (Drive End)	455 Kc/s.	Gang fully closed	Top Core T6
2	Aerial Section of Gang (Drive End)	455 Kc/s.	Gang fully closed	Bottom Core T6
3	Aerial Section of Gang (Drive End)	455 Kc/s.	Gang fully closed	Top Core T5
4	Aerial Section of Gang (Drive End)	455 Kc/s.	Gang fully closed	Bottom Core T5*
5	Aerial Section of Gang (Drive End)	455 Kc/s.	Gang fully closed	Top Core T4*
6	Aerial Section of Gang (Drive End)	455 Kc/s.	Gang fully closed	Bottom Core T4
*If the 1st and 2nd I.F. are completely out of alignment, tune bottom core T5 and top core T4 for a sharp dip and then repeat the above adjustments, peaking all cores.				
7	Aerial Lead	600 Kc/s.	600 Kc/s. (7ZL)	L.F. Osc. Core Adj. (L2)†
8	Aerial Lead	1500 Kc/s.	1500 Kc/s. (3AK)	H.F. Osc. Adj. (C16)
9	Aerial Lead	1500 Kc/s.	1500 Kc/s. (3AK)	H.F. Aer. Adj. (C4)
Repeat the above adjustments until maximum output is obtained.				
Switch Receiver to S/W and proceed as below				
10	Aerial Lead	16 Mc/s.	16 Mc/s.	H.F. Osc. Adj. (C10)‡
11	Aerial Lead	16 Mc/s.	16 Mc/s.	H.F. Aer. Adj. (C5)

† Rock the tuning control back and forth through signal.

‡ Use maximum capacity peak if two can be obtained. Check to determine that the trimmer has been adjusted to correct peak by tuning the receiver to approximately 16.91 Mc/s., where a weaker signal should be obtained.

TRANSFORMER TAPS

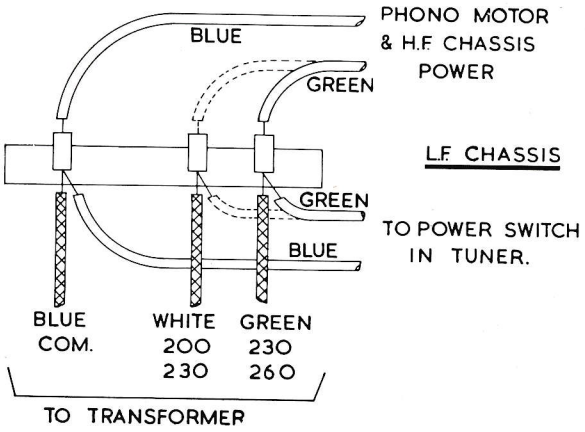

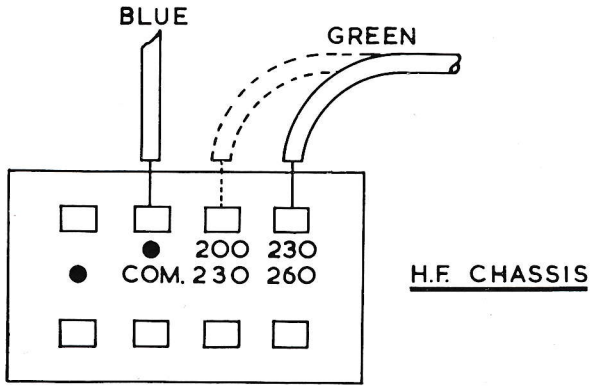

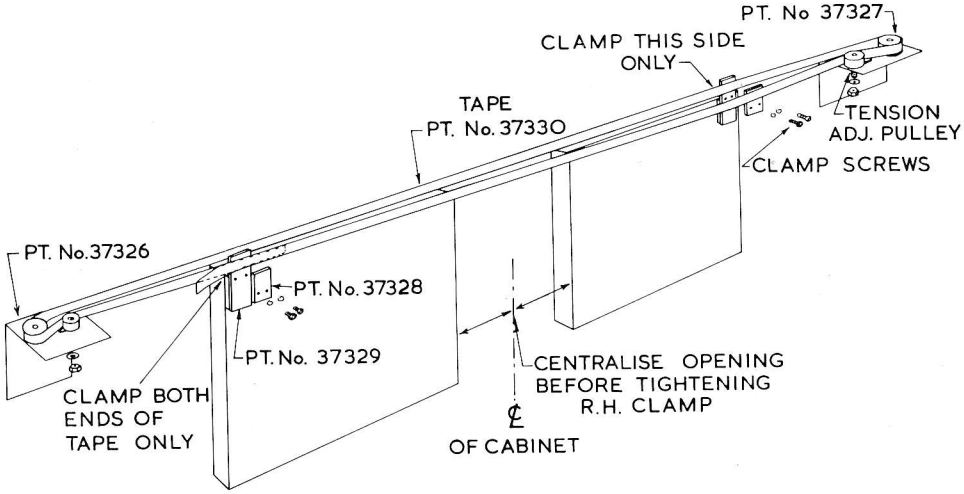

VIEWED FROM BACK

Sliding Door Adjustment:

The moving elements of the above system are exposed on removing the backs of all speaker compartments. This will be necessary should ever the system need lubrication or should the Tape become slack or broken.

The procedure for assembling the system is:—

Loosen nuts on Tension Adjustment Pulleys and move them towards the centre of the cabinet.

Loosen Clamp Screws and place the Tape in the position shown above.

Pull the Tape finger tight and lock in position with the Left Hand Clamp.

Any slackness in the Tape may be taken up by the range of movement in the Tension Adjustment Pulleys. When set in position their nuts should be tightened securely.

The doors should now be centralised in an open position, lining the edge of each door up with the edge of the Volume Control slot being a good reference point.

Without moving either door from this position, tighten the Right Hand Clamp.

Check the door for smoothness and quietness of operation, and if satisfactory, replace the backs for the speaker compartments.

CIRCUIT CODE — MODEL 1091-GA

Code No.	Description	Part No.	Fig. No.	Location
C36	220 pF ± 10% mica		1	E15
C37	0.0022 μF ± 20% 400V working paper		1	F15
C38	0.01 μF ± 20% 400V working paper		1	F15
C39	0.01 μF ± 20% 400V working paper		1	G15
C40	0.0033 μF ± 20% 600V working paper		1	G15
C41	0.047 μF ± 20% 400V working paper		1	E10
C42	100 pF ± 10% mica		1	F4
C101	680 pF ± 5% silvered mica		2	J2
C102	150 pF ± 5% silvered mica		2	K2
C103	0.1 μF ± 20% 400V working paper		2	L4
C104	0.047 μF ± 20% 400V working paper		2	J6
C105A	16 μF 450 P.V. Electrolytic			
C105B	8 μF 450 P.V. Electrolytic	222629	2	K13
C105C	8 μF 450 P.V. Electrolytic			
C106	4.7 pF ± 10% N750 bead ceramic		2	J7
C107	25 μF 40 P.V. Electrolytic		2	J9
C108	0.001 μF ± 10% 600V working paper		2	K4
C109	0.1 μF ± 10% 200V working paper		2	J5
C110	0.47 μF ± 20% 200V working paper		2	K8
C111	1 μF ± 200% 200V working paper		2	L9
C201	12 pF ± 10% N750 bead ceramic		3	J13
C202	150 pF ± 2½% silvered mica		3	K14
C203	300 pF ± 2½% silvered mica		3	J14
C204	150 pF ± 2½% silvered mica		3	K14
C205	68 pF ± 10% mica		3	J15
C206	0.01 μF ± 20% 400V working paper		3	M16
C207A	16 μF 450 P.V. Electrolytic			
C207B	8 μF 450 P.V. Electrolytic	222629	3	K8
C207C	8 μF 450 P.V. Electrolytic			
C208	0.1 μF ± 20% 400V working paper		3	L15
C209	0.1 μF ± 20% 400V working paper		3	L12
C210	10 pF ± 10% N750 tubular ceramic		3	L12
C211	25 μF 40 P.V. Electrolytic		3	L10
C212	22 pF ± 5% N750 tubular ceramic		3	J10
	TRANSFORMERS			
T1	Aerial Coil, 540-1600 Kc/s.	30768	1	D5
T2	Aerial Coil, 6-18 Mc/s.	28228	1	D6
T3	Oscillator Coil, 6-18 Mc/s.	28229	1	E3
T4	I.F. Transformer	34394	1	B8
T5	I.F. Transformer	34394	1	B10
T6	I.F. Transformer	33596	1	B13
T101	Audio Output Transformer	21497	2	C5
T102	Power Transformer	17859	2	C15
T201	Audio Output Transformer	25861	3	D13
T202	Power Transformer	25859	3	D4
	INDUCTORS			
L1	I.F. Filter Coil (including C1)	9382	1	D2
L2	Oscillator Coil, 540-1600 Kc/s.	32406	1	E2
L101	Filter Choke	36612A	2	C9
L202	Filter Choke	21499	3	D9

Code No.	Description	Part No.	Fig. No.	Location
	PLUGS			
PL1	2-Pin Wafer	581236		
PL2	2-Pin Moulded	581234		
PL3	2-Pin Wafer	581215		
PL4	3-Pin Moulded	33117		
PL5	2-Pin Wafer	581215		
PL6	2-Pin Wafer	581215		
PL7	2-Pin Wafer	581215		
PL8	4-Pin Moulded	29696		
PL9	Pik-up Plug	581549		
PL101	4-Pin Moulded	29696	2	F4
PL201	3-Pin Wafer	34625		
PL202	4-Pin Moulded	29696		
	SOCKETS			
SK1	Pick-up Input Socket	793247	1	D10
SK2	2-Pin Wafer	793038	1	D9
SK3	4-Pin Moulded	28313	1	C14
SK4	4-Pin Wafer (Pre-Amp. Socket)	40180	1	D15
SK101	3-Pin Wafer	31825	2	J3
SK102	2-Pin Wafer	794536	2	K12
SK103	2-Pin Wafer	794534	2	J13
SK104	2-Pin Wafer	793038	2	H13
SK201	3-Pin Wafer	31825	3	J16
SK202	4-Pin Moulded	28313	3	L6
SK203	4-Pin Moulded	28313	3	K6
SK204	2-Pin Wafer	793038	3	N5
SK205	2-Pin Wafer	793038	3	N13
	LOUDSPEAKERS			
LS1	2½" Perma nent Magnet 15 ohm imp.	21536M		
LS2	2½" Permanent Magnet 15 ohm imp.	21536M		
LS3	4" Permanent Magnet 6.5 ohm imp.	21534M		
LS4	4" Permanent Magnet 28 ohm imp.	21588M		
LS5	12" Permanent Magnet 15 ohm imp.	21586M		
LS6	12" Permanent Magnet 15 ohm imp.	21586M		
	SWITCHES			
SWA	Range Selector Switch	37352	1	F3
SWB	Extended Range Switch	37341	1	H5
SWC	Power Switch	37343	1	H14
	VALVES			
V1	Radiotron 6BE6		1	B6
V2	Radiotron 6N8		1	B12
V3	Radiotron Z729/6BK8		1	B13
V101	Radiotron 6AU6		2	C3
V102	Radiotron 6AQ5		2	C7
V103	Radiotron 6X4		2	C11
V201	Radiotron 12AX7		3	D16
V202	Radiotron 6V6GT		3	C14
V203	Radiotron 6V6GT		3	C11
V204	Radiotron 5Y3GT		3	C7

CIRCUIT CODE — MODEL 1091-GA

Code No.	Description	Part No.	Fig. No.	Location
	RESISTANCES			
	All Resistors ± 20% unless otherwise stated			
R1	100K ohms ½ watt		1	D5
R2	11K ohms 2 ,,		1	F9
R3	22K ohms ½ ,,		1	D5
R4	100 ohms ± 10% ½ ,,		1	D5
R5	100K ohms ½ ,,		1	D12
R6	1.5 megohms ½ ,,		1	D12
R7	220 ohms ± 10% 1 ,,		1	D11
R8	1.5 megohms ½ ,,		1	D12
R9	470K ohms ½ ,,		1	D12
R10	47K ohms ½ ,,		1	D13
R11	1 megohm, 100K ohms tap. Volume Control	37204	1	F10
R12	33K ohms ½ watt		1	F10
R13	680K ohms ± 10% 1 ,,		1	E13
R14	47K ohms 1 ,,		1	D13
R15	6.8K ohms ± 10% ½ ,,		1	E13
R16	100K ohms 1 ,,		1	E14
R17	680 ohms ± 10% 1 ,,		1	E16
R18	10K ohms ½ ,,		1	E14
R19A	1 megohm Treble Control	37203	1	F15
R19B	1 megohm Bass Control		1	G15
R20	1.2 megohms ± 10% ½ watt		1	F16
R21	47K ohms ½ ,,		1	F14
R22	2.2K ohms ½ ,,		1	E10
R23	680K ohms ± 10% ½ ,,		1	F4
R24	470K ohms ± 10% ½ ,,		1	F4
R101	220K ohms ± 5% ½ ,,		2	K2
R102	2 in series 10 megohms ± 10% ½ watt		2	K3, K4
R103	1 megohm ± 5% ½ ,,		2	K3
R104	220K ohms ± 10% 1 ,,		2	K5
R105	680K ohms ± 10% 1 ,,		2	L4
R106	470K ohms ½ ,,		2	J6
R107	47K ohms ½ ,,		2	J7
R108	4.7K ohms 1 ,,		2	K13
R109	250 ohms ± 5% 3 ,,		2	J9
R110	10K ohms ± 5% ½ ,,		2	K4
R111	220 ohms ± 5% 1 ,,		2	J4
R112	330 ohms ± 5% 1 ,,		2	J5
R113	2.2K ohms ± 5% ½ ,,		2	J6
R114	15 ohms 1 ,,		2	K12
R201	3.3 megohms ± 10% ½ ,,		3	K16
R202	390K ohms ± 5% ½ ,,		3	J14
R203	220K ohms ± 5% ½ ,,		3	K14
R204	390K ohms ± 5% ½ ,,		3	J14
R205	1 megohm ± 10% ½ ,,		3	K15
R206	220K ohms ± 10% 1 ,,		3	N16
R207	1 megohm ½ ,,		3	M16
R208	100K ohms ± 5% 1 ,,		3	M15
R209	2.2K ohms ± 5% ½ ,,		3	M16
R210	100K ohms ± 5% 1 ,,		3	N16
R211	22K ohms 1 ,,		3	J8
R212	470K ohms ½ ,,		3	L14
R213	470K ohms ½ ,,		3	L12
R214	10K ohms ½ ,,		3	M14
R215	2 in Parallel 250 ohms ± 5% 5 ,, W.W.		3	L10
R216	10K ohms ½ ,,		3	M11
R217	22K ohms ± 5% ½ ,,		3	K10
R218	2.2K ohms ± 5% ½ ,,		3	J10
R219	0.47 ohms ± 10% ½ ,,		3	J10
R220	120 ohms 1 ,,		3	L14
R221	120 ohms 1 ,,		3	N14
R222	250 ohms W.W. Hum Rejection	36822	3	M9
	CAPACITORS			
C1	47 pF ± 5% silvered mica (on L1)		1	D2
C2	5.6 pF ± 10% N750 tubular ceramic		1	E4
C3	0.1 μF ± 20% 200V working paper		1	C3
C4	1-12 pF Air Trimmer B/C Aerial	16347	1	E2
C5	2-20 pF Air Trimmer S/W Aerial	19659	1	D7
C6	4000 pF ± 2½% padder		1	E6
C7	10 pF ± 10% mica		1	F6
C8	12-445 pF tuning Aerial	18674	1	C5
C9	0.002 μF ± 10% silvered mica		1	G2
C10	2-20 pF Air Trimmer S/W Osc.	19659	1	D2
C11	47 pF ± 10% mica		1	C5
C12	12-445 pF tuning Osc.	18674	1	B5
C13	100 pF ± 5% silvered mica (in 1st I.F.)		1	C8
C14	100 pF ± 5% silvered mica (in 1st I.F.)		1	C8
C15	470 pF ± 2½% padder		1	E2
C16	8-40 pF spiral trimmer B/C Osc.	231185	1	B2
C17	0.1 μF ± 20% 400V working paper		1	D10
C18	0.01 μF ± 10% silvered mica		1	D8
C19	100 pF ± 5% silvered mica (in 2nd I.F.)		1	C10
C20	100 pF ± 5% silvered mica (in 2nd I.F.)		1	C10
C21	5.6 pF ± 10% N750 tubular ceramic		1	D12
C22	0.1 μF ± 20% 200V working paper		1	D11
C23	0.1 μF ± 20% 200V working paper		1	D11
C24	47 pF ± 20% N750 tubular ceramic		1	D12
C25	220 pF ± 5% silvered mica (in 3rd I.F.)		1	C13
C26	220 pF ± 5% silvered mica (in 3rd I.F.)		1	C13
C27	0.001 μF ± 10% 600V working paper		1	E12
C28	100 pF ± 10% N750 tubular ceramic		1	D13
C29	0.1 μF ± 20% 400V working paper		1	E10
C30	0.1 μF ± 20% 400V working paper		1	D13
C31	0.047 μF ± 10% 200V working paper		1	E10
C32	6 μF 525 P.V. Electrolytic		1	F14
C33	100 μF 10 W.V. Electrolytic		1	E16
C34	22 pF ± 5% N750 tubular ceramic		1	E14
C35	22 pF ± 5% N750 tubular ceramic		1	E14

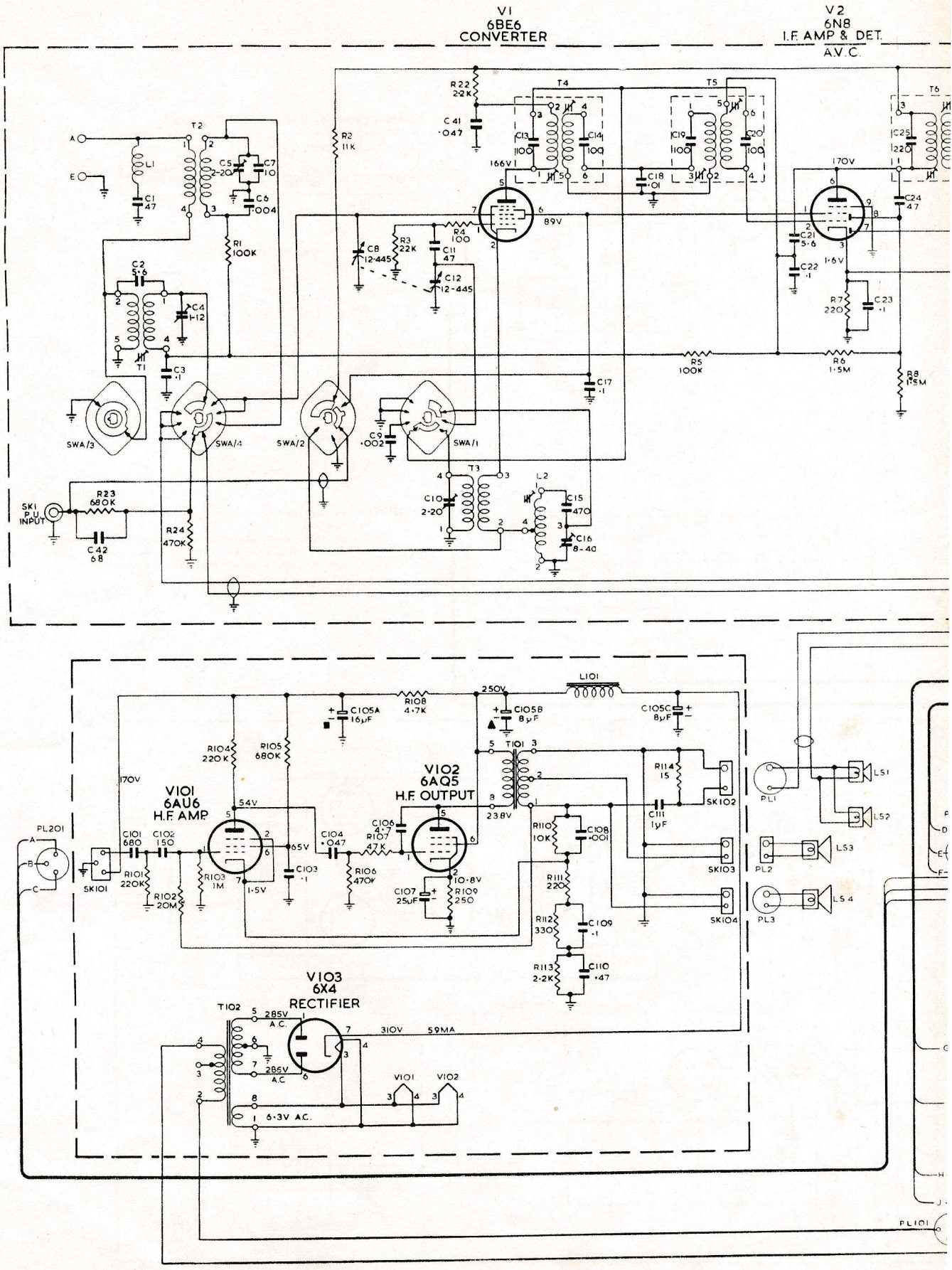
V1
6BE6
CONVERTER
V2
6N8
I.F. AMP & DET.
A.V.C.
V101
6AU6
H.F. AMP
V102
6AQ5
H.F. OUTPUT
V103
6X4
RECTIFIER
SK1
P.U.
INPUT
PL201
SK101
PL1
PL2
PL3
PL101
LS1
LS2
LS3
LS4
SK102
SK103
SK104
SWA/1
SWA/2
SWA/3
SWA/4
T1
T2
T3
T4
T5
T6
T101
T102
L1
L2
L101
170V
166V
89V
1·6V
250V
238V
54V
65V
1·5V
10·8V
285V A.C.
286V A.C.
310V
59MA
6·3V A.C.

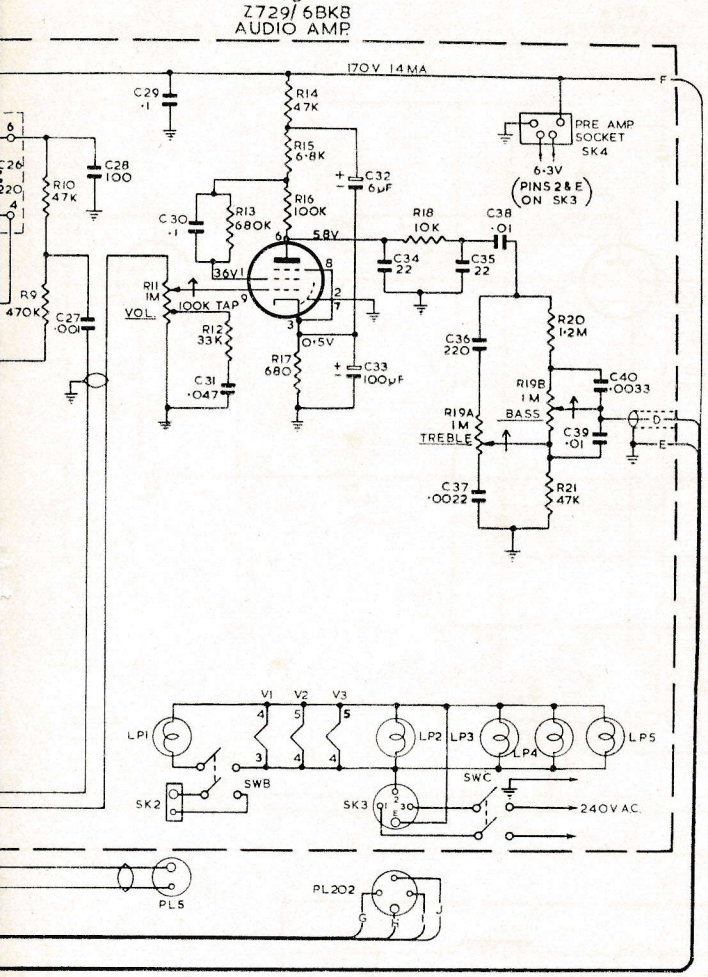

TRANSFORMER BASE CONNECTIONS

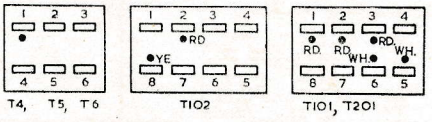

VALVE BASES

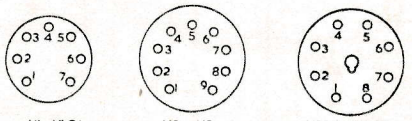

EXTERNAL WIRING VIEW

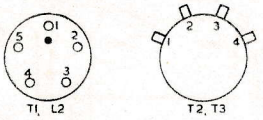

NOTE :- ALL OAK SWITCHES SHOWN IN EXTREME ANTI-CLOCKWISE POSITION.
VOLTAGES SHOWN MEASURED WITH ALL UNITS INTERCONNECTED, VOLUME, BASS & TREBLE CONTROLS IN MAXIMUM CLOCKWISE POSITION, TUNER ON B/C POSITION, NO SIGNAL INPUT.
ALL SOCKETS SHOWN WITH REAR VIEW.
ALL PLUGS SHOWN WITH PIN VIEW.

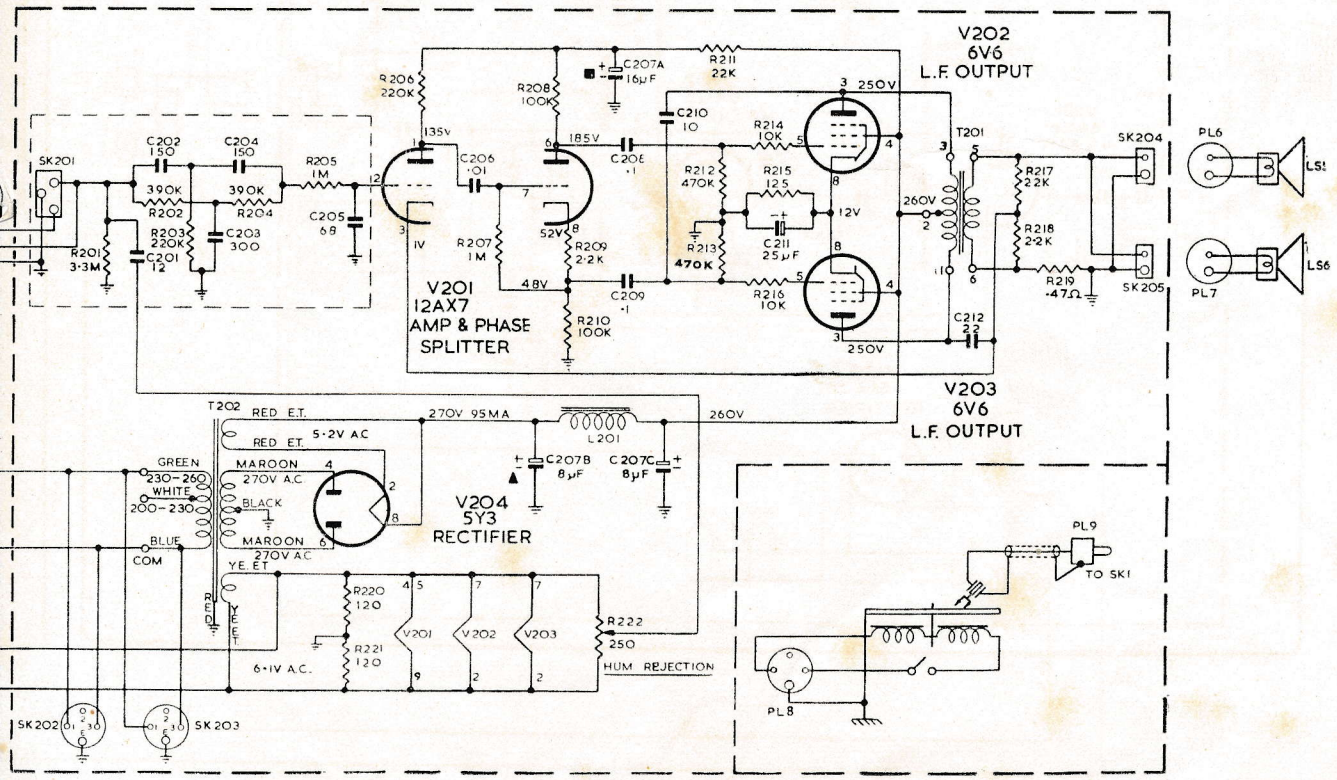

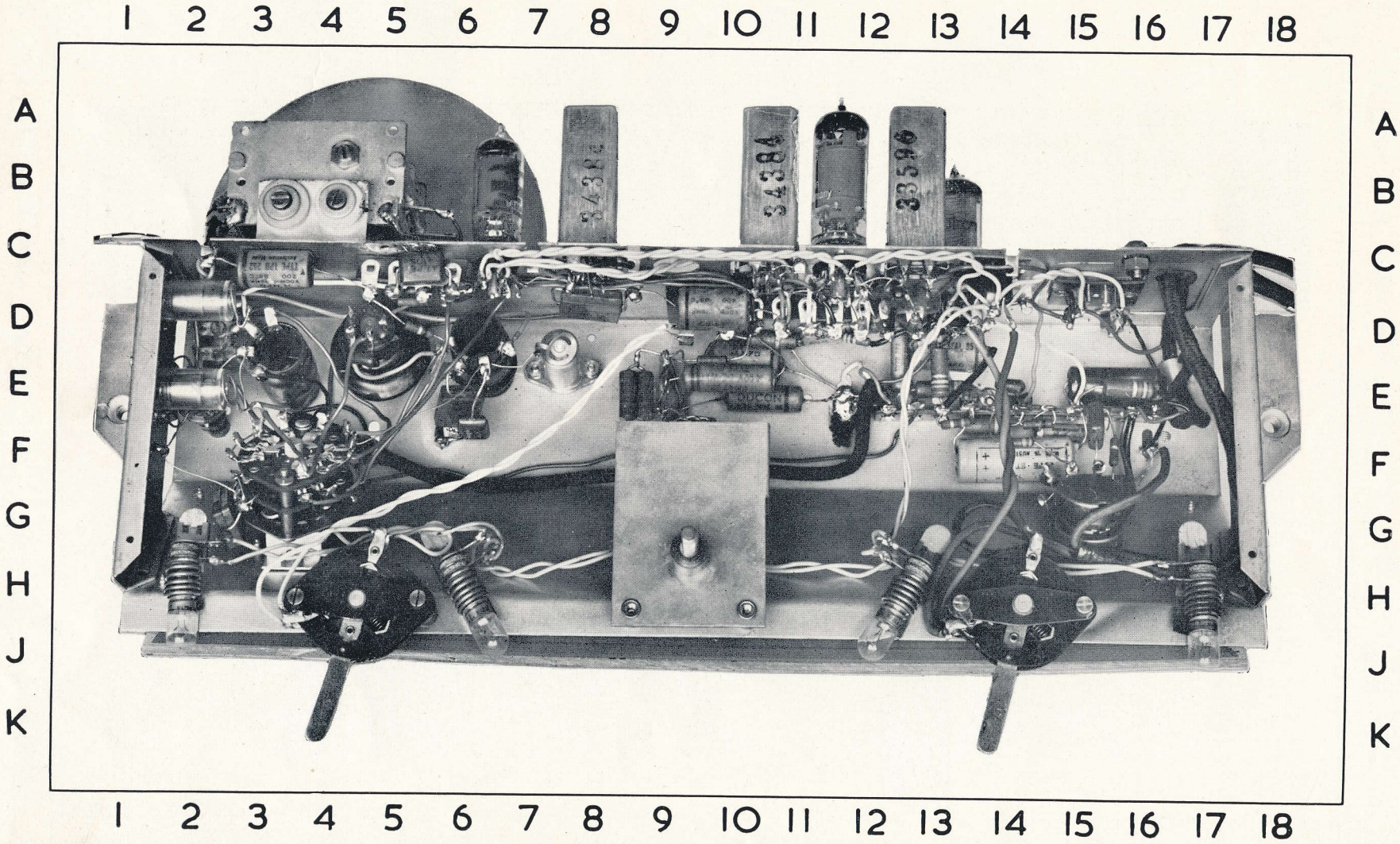

FIG. 1

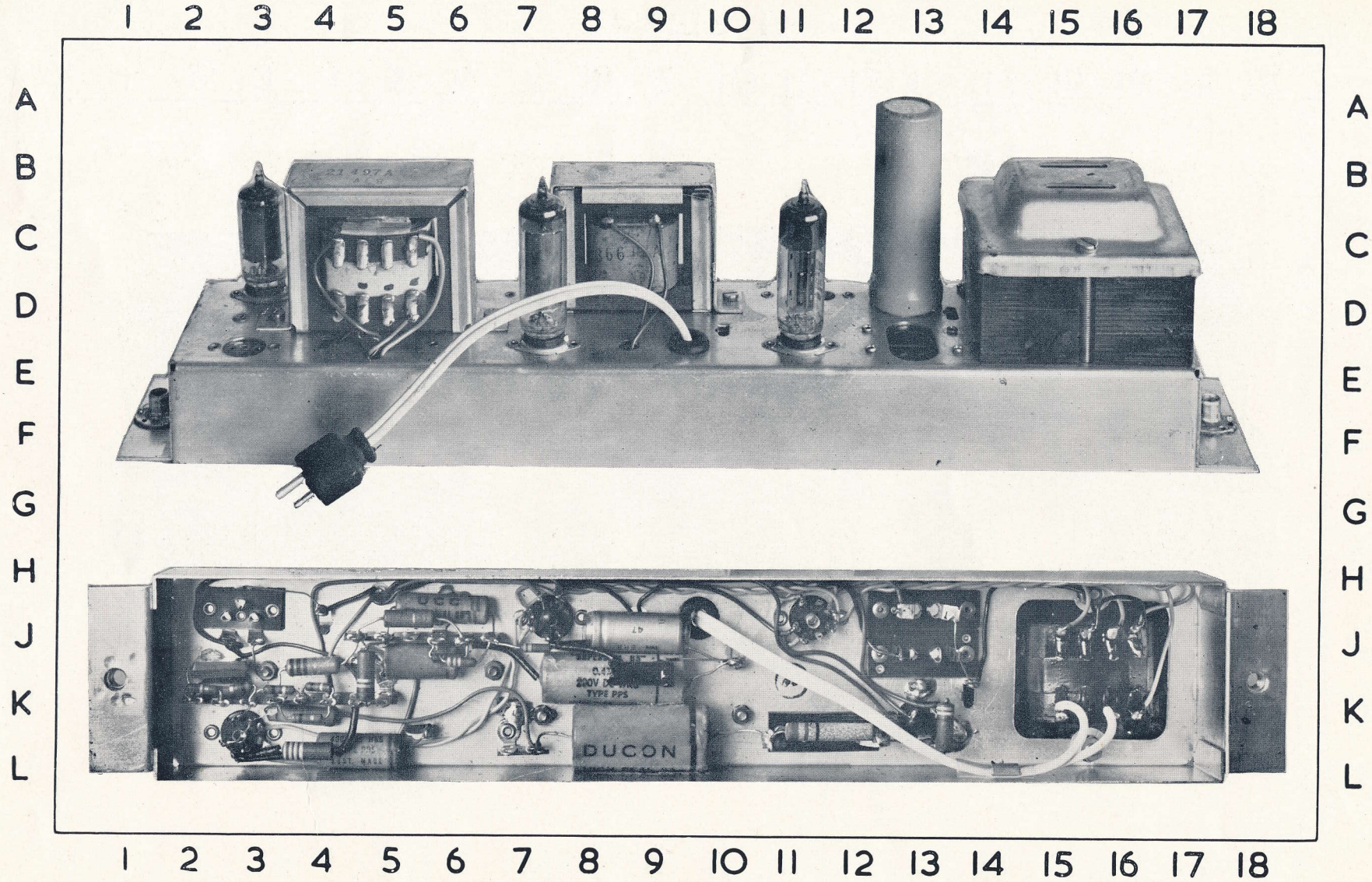

FIG. 2

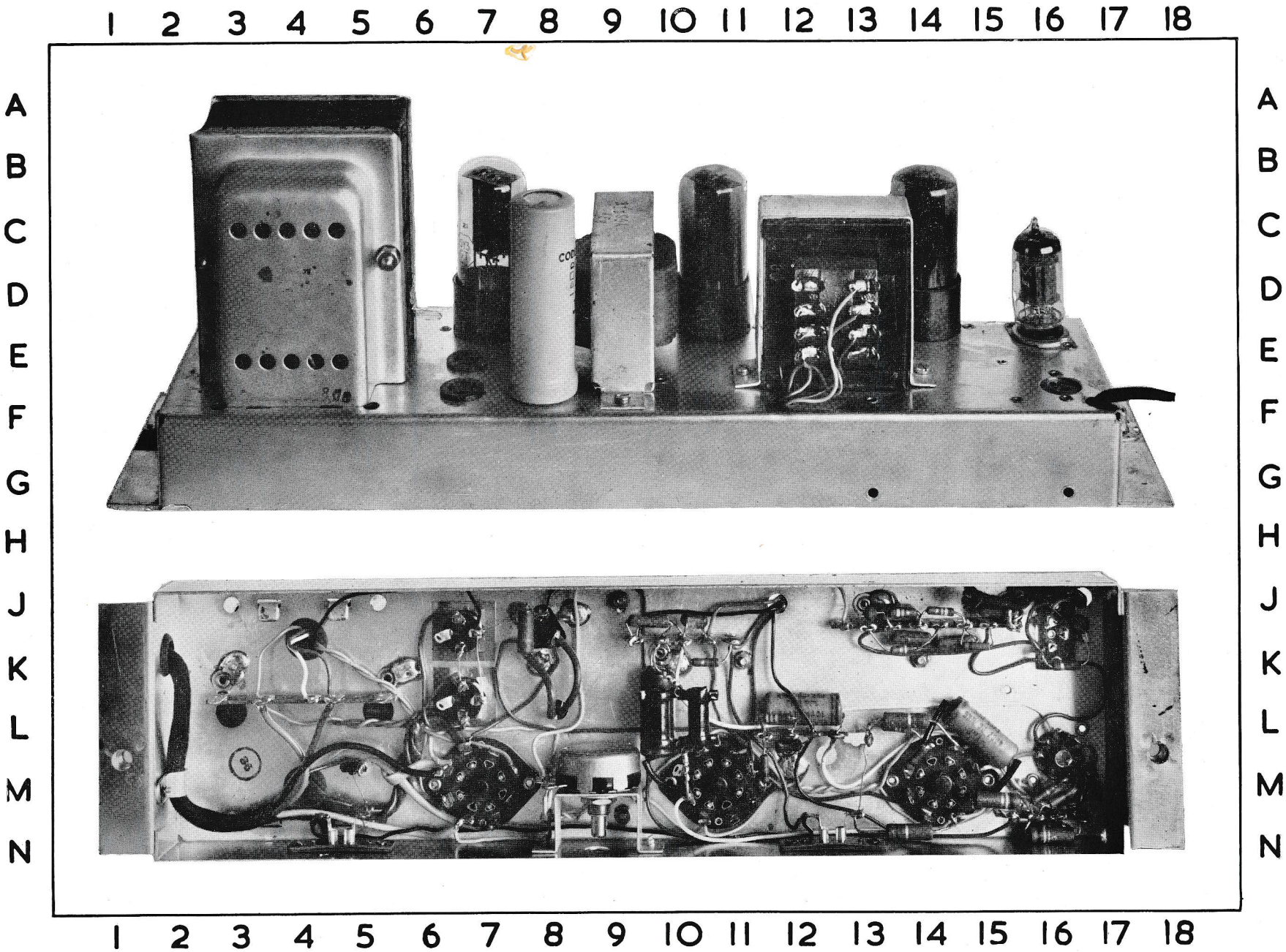

FIG. 3

AWA