S E R V I C E - D A T A

FERRIS Model 102 Tuner

Model 102/105 Power Supply

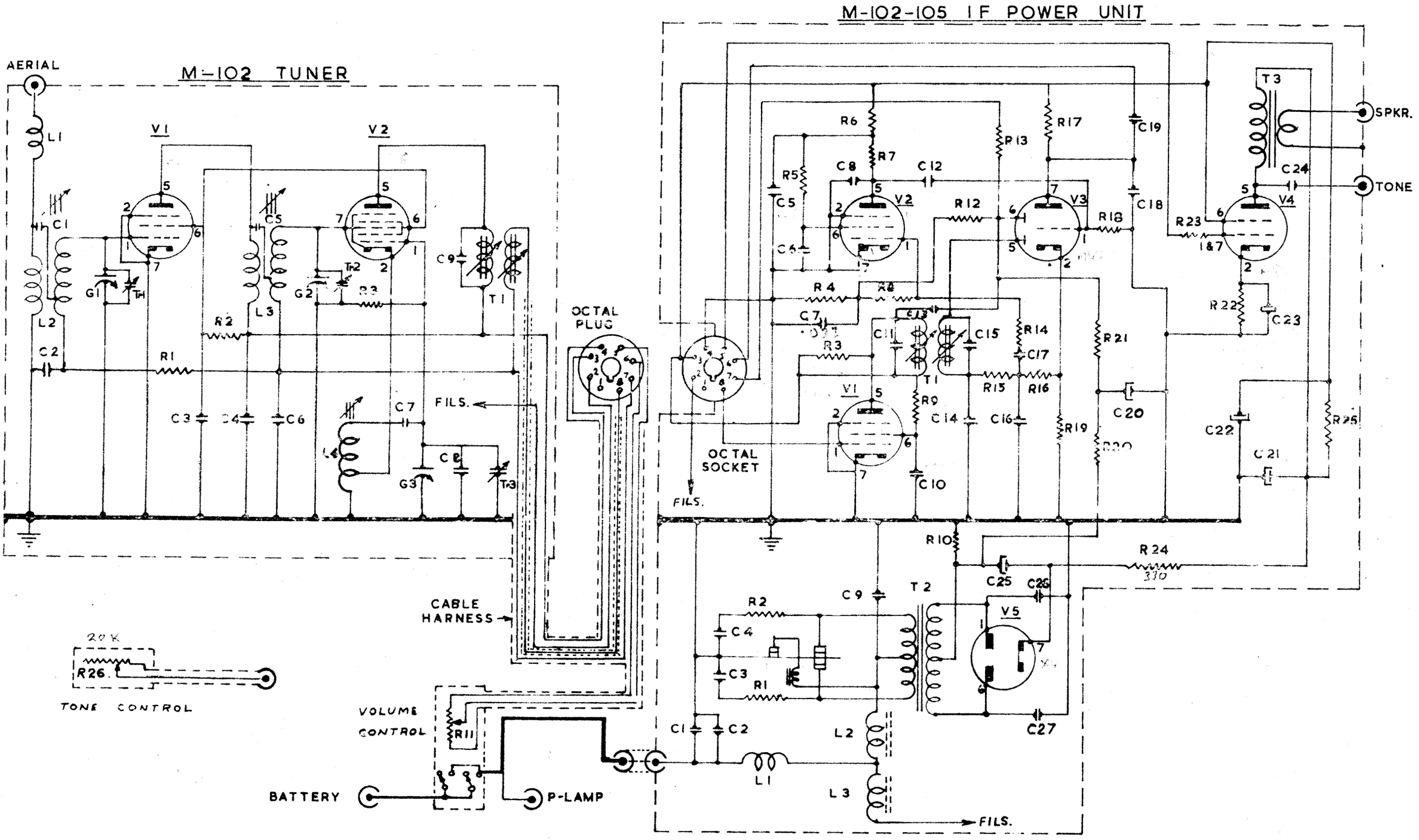
M-102-105 I F POWER UNIT
M-102 TUNER
AERIAL
L1
V1
V2
C1
C5
G1
TH
L2
L3
G2
Tr2
R3
C9
T1
R2
C2
R1
C3
C4
C6
C7
FILS.
L4
C8
G3
Tr3
OCTAL PLUG
CABLE HARNESS
20K
R26.
TONE CONTROL
VOLUME CONTROL
R11
BATTERY
P-LAMP
R6
R7
R5
C8
C12
R13
R17
C19
C5
V2
R12
V3
R18
C18
C6
R4
R8
C7
C13
C11
C15
R14
C17
R3
T1
R15
R16
V1
R9
C14
C16
R19
R20
R21
C20
C10
OCTAL SOCKET
FILS.
T3
SPKR.
C24
TONE
V4
R23
1&7
R22
C23
C22
C21
R25
R10
R24
310
C25
C26
C9
T2
V5
R2
C4
C3
R1
C27
C1
C2
L2
L1
L3
FILS.

VALVE LAYOUT

M 102 TUNER

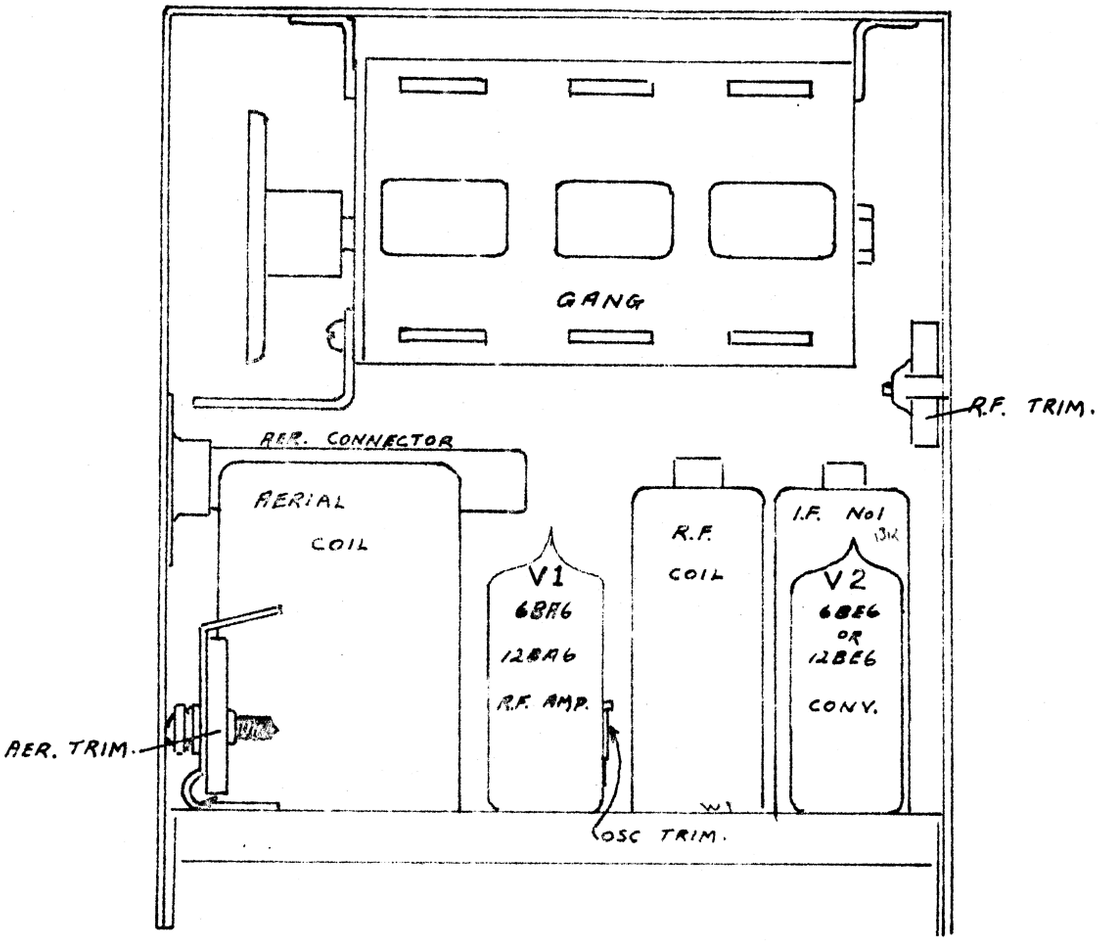

M 102 105 IF POWER UNIT

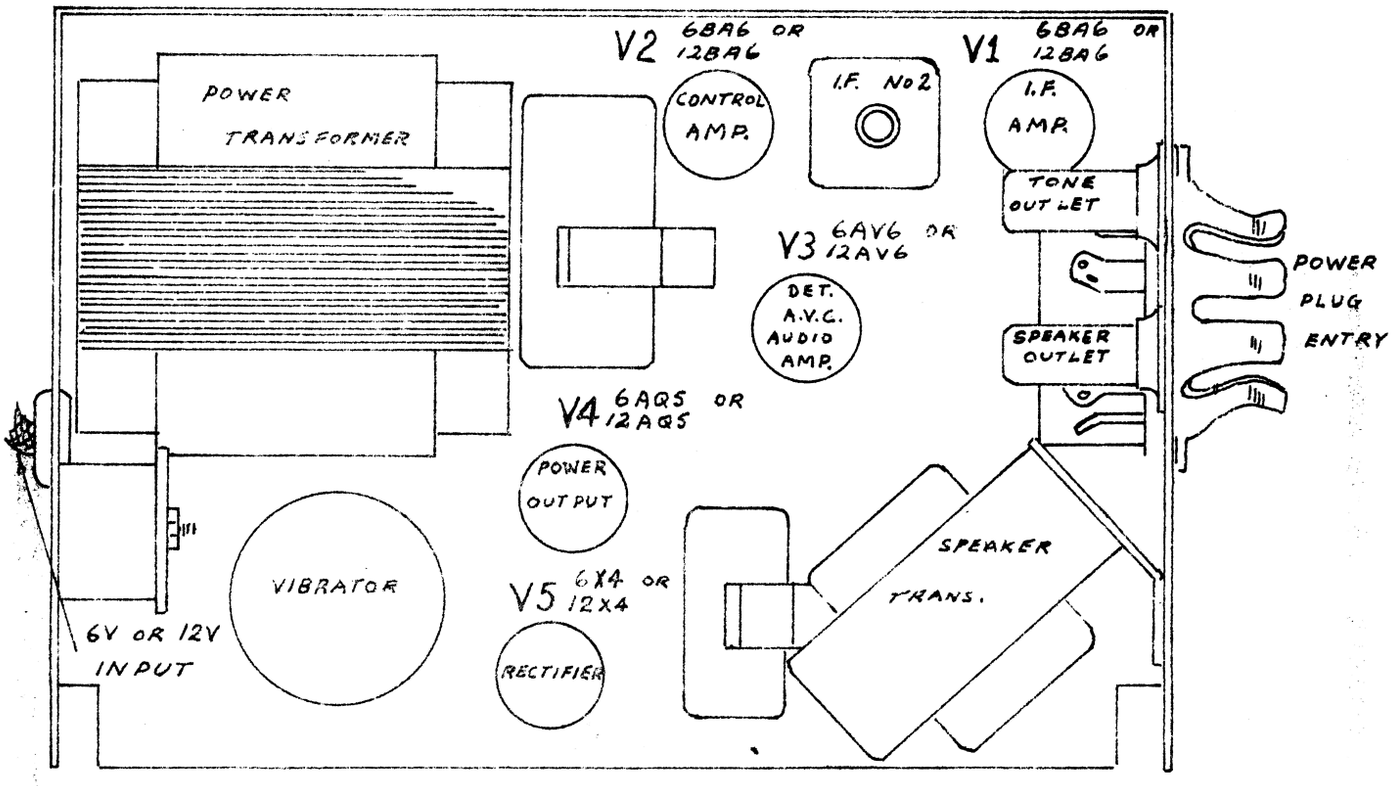

REMOVAL OF LIDS

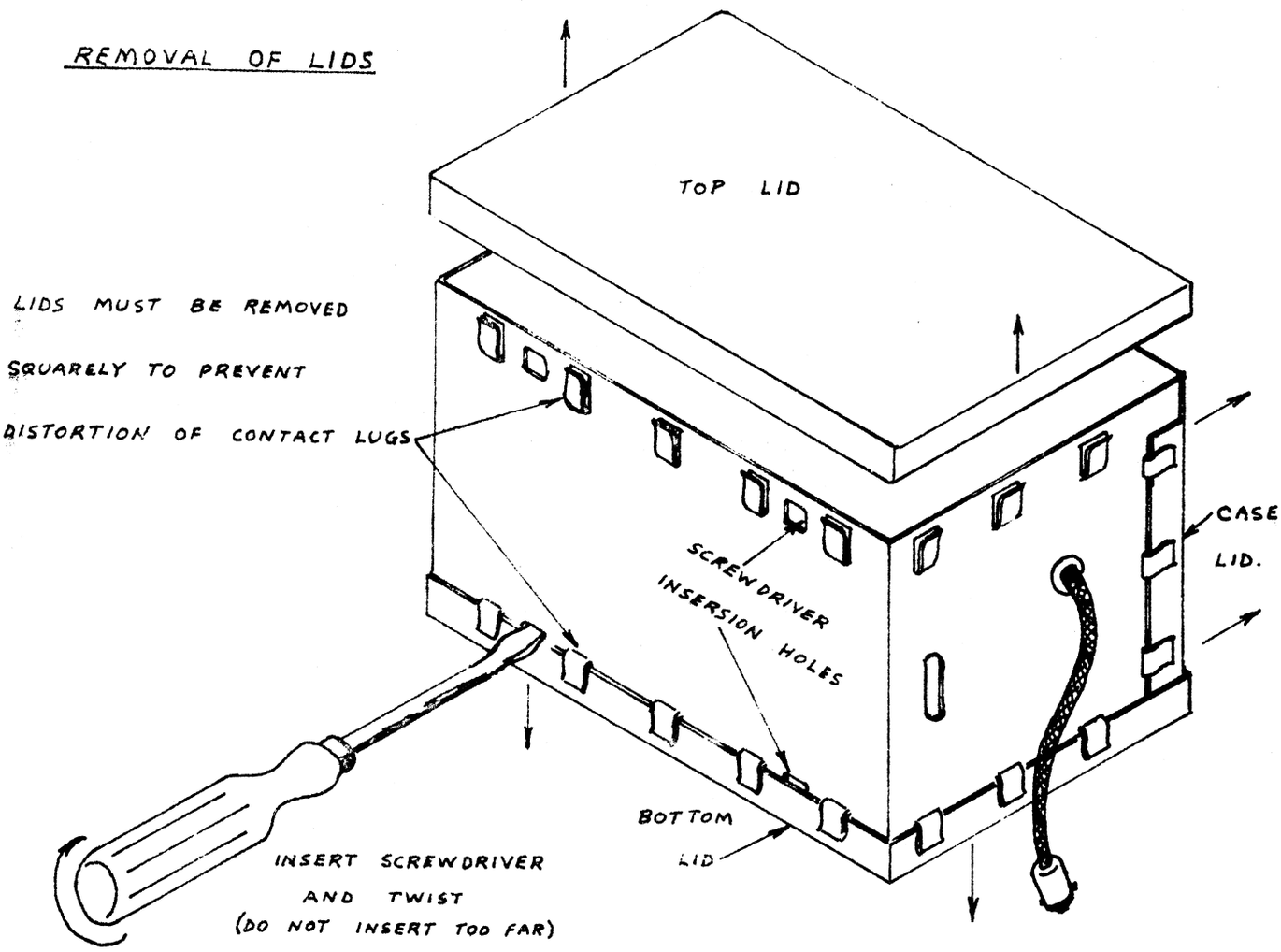

FERRIS MODEL 102 TUNER

COMPONENTS PARTS LIST

CAPACITORS

C1 100 pf 20% mica
C2 .047 uf 200v paper
C3 .047 uf 400v "
C4 .047 uf 400v "
C5 25 pf 10% mica
C6 .047 uf 200v paper
C7 475 pf ±2% mica
C8 15 pf 20% mica
C9 100 pf nominal value

TRANSFORMERS

T1 I.F. 455 KC No.R654

TUNING CAPACITORS

G1, G2, G3 - 3 gang
Roblan Part No.RP172

Tr.1 Simplex trimmer CT 3.55
Tr.2 J. Bell trimmer
Tr.3 Air trimmer 3 - 30 pf

RESISTORS

R1 220K ½W 20% carbon
R2 33K 1W 20% "
R3 22K ½W 20% "

INDUCTORS

L1 Aerial choke No.RP127
L2 Aerial coil No. R653
L3 RF coil No.FB 86
L4 Osc. coil No.6BE6

VALVES

V1 - 6BA6 or 12BA6
V2 - 6BE6 or 12BE6

REMOVAL OF LIDS FOR SERVICE

It will be noted that M102 tuner with its associate M102/105 power unit are so designed as to keep the use of self-tapping screws to a minimum. Instead, contact lugs are used to give the required earthing of the lids and at the same time making them a firm press fit. Special square holes are provided in the sides of each unit into which the tip of a screw driver can be inserted to assist in the removal of the lids. See sketch

Care in removing the lids squarely, is most important if distortion of the contact lugs is to be avoided. Distortion will result in poor shielding and noise interference troubles. N.B. If lugs are accidentally displaced they must be pressed in to make firm contact with the lids.

FERRIS MODEL 102/105 I.F. POWER UNIT

CAPACITORS

C1 .001 uf 20% mica
C2 .47 uf 100V paper
C3 .1 uf 200V paper
C4 .1 uf 200V paper
C5 .25 uf 400V paper
C6 .047 uf 200V paper
C7 .033 uf 200V paper
C8 100 pf 20% mica
C9 .47 uf 100V paper
C10 .047 uf 400V paper
C11 100 pf mica nominal value
C12 .01 uf 600V paper
C13 50 pf 20% mica
C14 100 pf 20% mica
C15 100 pf mica nominal value
C16 100 pf 20% mica
C17 .0047 uf 600V paper
C18 250 pf 20% mica
C19 .033 uf 400V paper
C20 5 uf 40V electrolytic
C21 16 uf 350V electrolytic
C22 16 uf 350V electrolytic
C23 25 uf 40V electrolytic
C24 .1 uf 400V paper
C25 16 uf 350V electrolytic
C26 .022 uf 1000V paper
C27 .022 uf 1000V paper

TRANSFORMERS

T1 I.F. 455 KC FB86
T2 Power trans. No.103 (6v)
or No.104 (12v)
T3 Speaker trans. No.65
7000 ohm primary

INDUCTORS

L1 H.A. choke air cored
L2 Iron dust L.T. choke
L3 Iron dust L.T. choke

FUSE RATING

6v Models - 15 amp.
12v Models - 10 amp.

RESISTORS

R1 22 ohm ½W 10%
R2 22 ohm ½W 10%
R3 220 K ½W 20%
R4 1 meg ½W 20%
R5 1 meg ½W 20%
R6 100 K ½W 20%
R7 100 K ½W 20%
R8 47 K ½W 20%
R9 100 K ½W 20%
R10 47 ohm ½W 10%
R11 500 K potentiometer
with D.P.S.T. switch
R12 1 meg ½W 20%
R13 1 meg ½W 20%
R14 470 K ½W 20%
R15 47 K ½W 20%
R16 220 K ½W 20%
R17 100 K ½W 20%
R18 220 K ½W 20%
R19 1.5 K ½W 10%
R20 10 K ½W 20%
R21 1 meg ½W 20%
R22 330 ohm ½W 20%
R23 47 K ½W 20%
R24 330 ohm 1W 20%
R25 1 K 1W 20%
R26 20 K Potentiometer

VALVES

V1 - 6BA6 or 12BA6
V2 - 6BA6 or 12BA6
V3 - 6AV6 or 12VA6
V4 - 6AQ5 or 12AQ5
V5 - 6 x 4 or 12 x 4

VIBRATOR

Oak 4006 - 6v models
Oak 4012 - 12v models

CIRCUIT ALIGNMENT PROCEDURE MODEL 102

All alignment procedure should be carried out with Volume Control set at a convenient Level and Tone Control in treble position. The carrier input should be modulated 30%. All adjustments listed below are made for maximum output indication.

Alignment Order	Sig. Generator Connected	Sig. Generator Connected Through	Sig. Generator Frequency	Receiver Gang Setting	Adjustment
1	6BE6 Grid (Tuner)	.05UF Condenser	455Kc/S	Fully Open	Both 2nd I.F.T. Cores. (In Power Unit)
2	6BE6 Grid	.05UF Condenser	455Kc/S	Fully Open	Both 1st I.F.T. Cores (In Tuner Unit)
RF 3	Aerial Socket	Standard Dummy Aerial	530 K/S	Fully Closed	Oscillator Coil Core
4	Aerial Socket	Standard Dummy Aerial	1610 Kc/S	Fully Open	Oscillator Trimmer
5	Aerial Socket	Standard Dummy Aerial	Repeat Operation 3 and 4 as necessary		
6	Aerial Socket	Standard Dummy Aerial	900Kc/S	Tune to Signal	Aerial and R.F. coil Cores
7	Aerial Socket	Standard Dummy Aerial	1400Kc/S	Tune to Signal	Aerial and R.F. Trimmers
8	Aerial Socket	Standard Dummy Aerial	Repeat Operations 6 and 7 as necessary		
9	Aerial Socket	Standard Dummy Aerial	550Kc/S	Tune Signal and Rock Gang	Adjust Oscillator Coil WHILST Rocking Gang
10	Aerial Socket	Standard Dummy Aerial	Repeat Operations 4 and 9 Inclusive as necessary		

11 Check that end of band limits are 1610 Kc/S and approximately 530 Kc/S and that sensitivity is well maintained at 1400 Kc/S 900 Kc/S and 550 Kc/S Tracking Points.