eurovox

SERVICE MANUAL

COMPACT DISC AUTO CHANGER

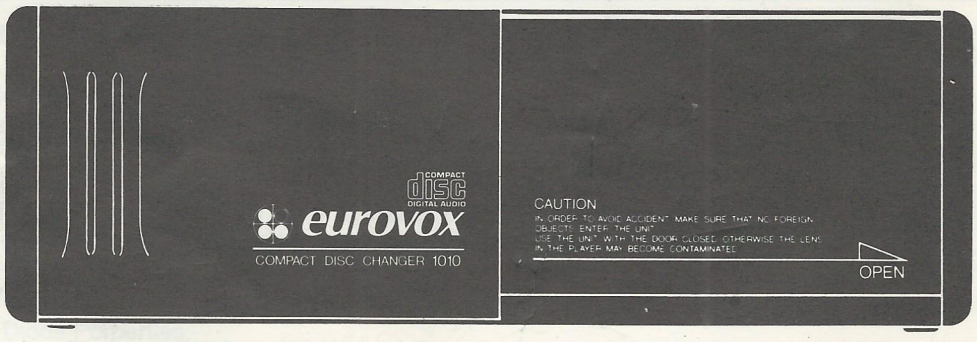

1010

Printed in Japan Dec. '90 Modification Reserved

CONTENTS

SPECIFICATIONS

SYSTEM: Compact disc digital audio system

LASER DIODE PROPERTIES:

Material:	GaAlAs
Wavelength:	780 nm
Emission duration:	Continuous
Laser output power:	Less than 44.6μW*

* This output is the value measured at a distance of 200mm from the objective lens surface on the Optical Pick-up Block.

D-A CONVERSION:	16-bit linear
FREQUENCY RESPONSE:	5 - 20,000 Hz ± 1 dB
SIGNAL-TO-NOISE RATIO:	90 dB
WOW AND FLUTTER:	Below measurable limit
OUTPUTS:	Line output (for changer connector only)
CURRENT DRAIN:	800mA (CD playback) 800mA (during disc loading or eject)
OPERATING TEMPERATURE:	-10° C - 55° C (14° F - 131° F)
DIMENSIONS:	301mm(W) x 98mm(H) x 200mm(D)
WEIGHT:	3 kg

SERVICING NOTES

NOTES ON HANDLING THE OPTICAL PICK-UP BLOCK OR BASE UNIT

The laser diode in the optical pick-up block may suffer electrostatic breakdown because of the potential difference generated by the charged electrostatic load, etc. on clothing and the human body.
During repair, pay attention to electrostatic breakdown and also use the precedure in the printed matter which is included in the repair parts.
The flexible board is easily damaged and should be handled with care.

PROTECTION OF EYES FROM LASER BEAM DURING SERVICING

This set employs a laser. Therefore, be sure to follow carefully the instructions below when servicing.

> CAUTION
> Use of controls or adjustments or performance of procedures other than those specified herein may result in hazardous radiation exposure.

1. Laser Diode Porperties
   - * Material: GaAlAs
   - * Wavelength: 780 nm
   - * Emission Duration: Continuous
   - * Laser Output: Max. 44.6μW*

   * This output is the value measured at a distance of about 200mm from the objective lens surface on the Optical Pick-up Block.

2. During service, do not take the Optical Pick-up Block apart, and do not adjust the APC circuit.
   If there is a breakdown in the APC circuit (including laser diode), replace the entire Optical Pick-up Block (including APC board).

MECHANICAL ADJUSTMENTS

[LARGE ELEVATOR GEAR POSITION (LOCATION 10.5) ADJUSTMENT]

1. Move the middle elevator gear in the arrowed direction and place the top plate at the position where there are no clearances between the bottom face of the top plate and the top edges of the three claws.

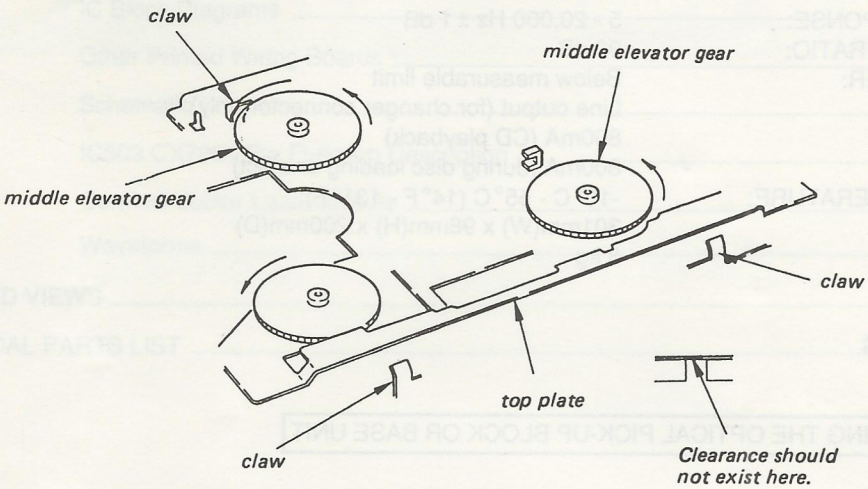

Fig. 1

2. Put the large elevator gear on the shaft of the top plate taking care not to move the middle elevator gears. The large elevator gear should be fastened by the top plate and EHS protrusion and should position in the relationship with the EHS as shown in Fig. 1.
3. After the placing, fix the large elevator gear with a retaining ring.

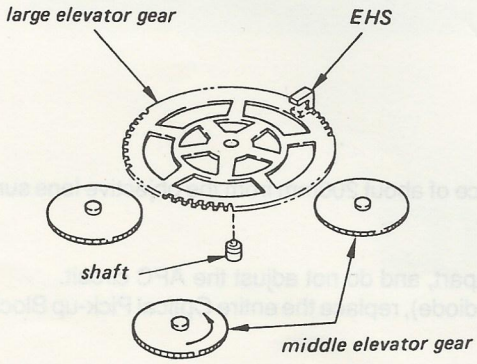

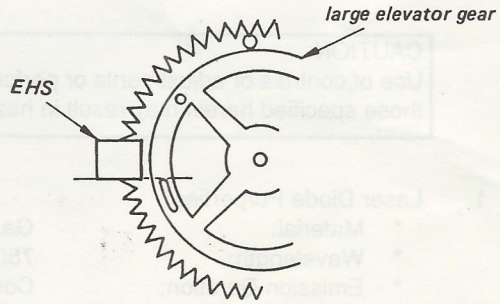

Edge of EHS protrusion and edge of protrusion on the large elevator gear should be aligned as shown.

Fig. 2

[HOMING ADJUSTMENT]

Note: 1. The mechanism section should be completely assembled.

2. Control the mechanism with the main unit XR-7300.

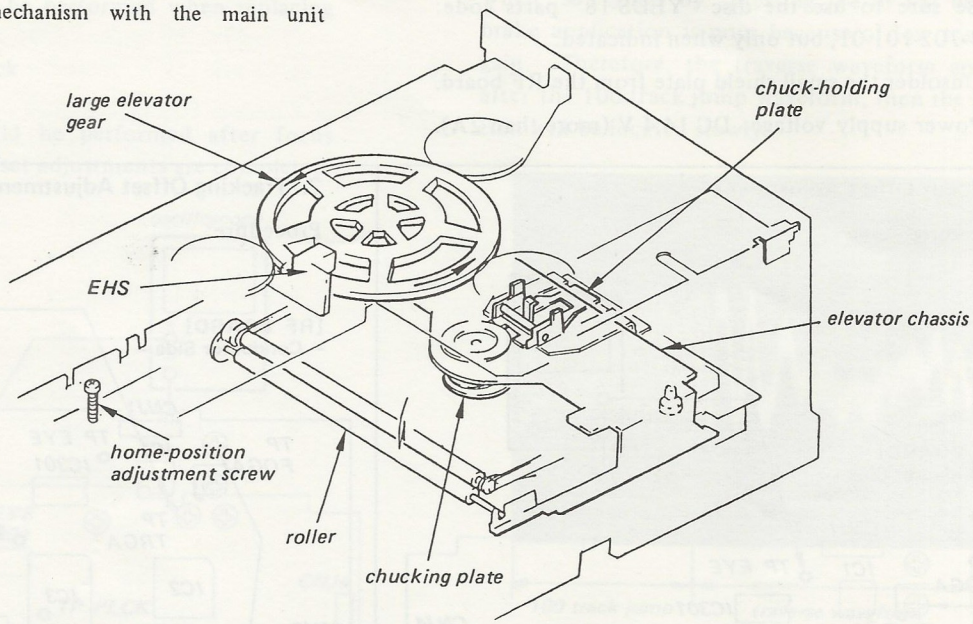

Fig. 3

1. Put the disk magazine containing several disks in the changer.
2. Initialize the changer.
3. Pull off the first disk.
4. Wait until the elevator lowers down to the home position.
5. Move the large elevator gear so that the clearance between the inner edge face of the chucking plate and edge of the top face of the stainless chuck-holding plate becomes in 1.5 mm (1/16 inches) as shown in Fig. 4.
6. Make a dot marking on the large elevator gear as shown in Fig. 5.
7. Re-put the first disk in the disk magazine.
8. Pull off the first disk again. The dot marking made in the step 6 above should position as shown in Fig. 5.
9. Fine adjust the position of the large elevator gear with the home-position adjustment screw shown in Fig. 3.

Adjustment Screw Position	Large Elevator Gear Position Displacement
One (1) turn in clockwise	15 (fifteen) degrees clockwise
One (1) turn in counterclockwise	15 (fifteen) degrees counterclockwise

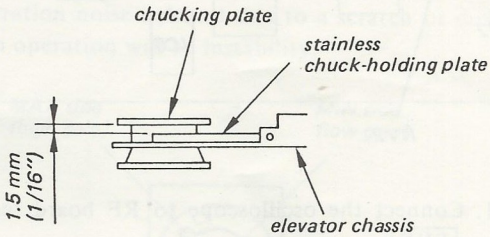

Fig. 4

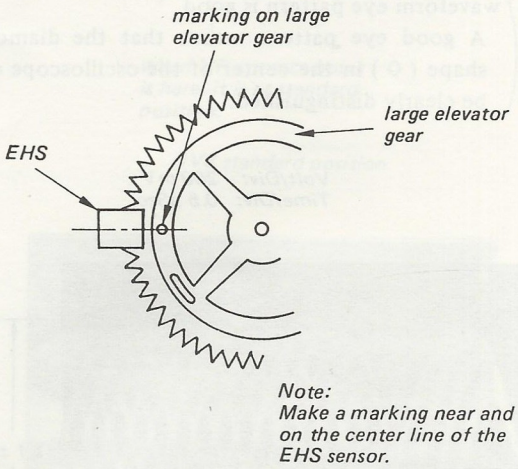

Fig. 5

ELECTRICAL ADJUSTMENTS

1. Perform adjustments as given.
2. Be sure to use the disc "YEDS-18" parts code: 3-702-101-01, but only when indicated.
3. Unsolder the small shield plate from the RF board.
4. Power supply voltage: DC 14.4 V (more than 2A).

1. Focus Offset Adjustment

Procedure:

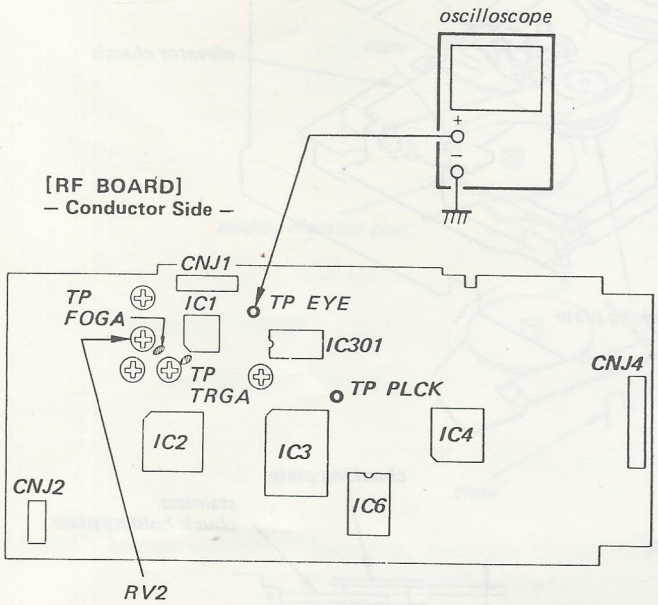

1. Connect the oscilloscope to RF board test point [EYE].
2. Put the set into play mode by loading the disc.
3. Adjust main board RV2 so that the oscilloscope waveform eye pattern is good.
   (A good eye pattern means that the diamond shape (◇) in the center of the oscilloscope can be clearly distinguished.)

Volt/Div: 200 mV
Time/Div: 0.5 µSec

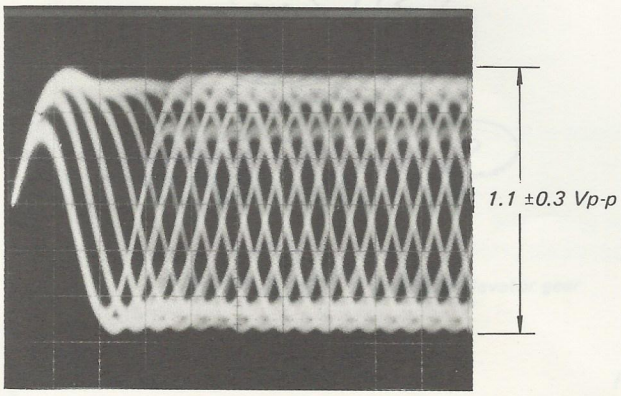

2. Tracking Offset Adjustment

Procedure:

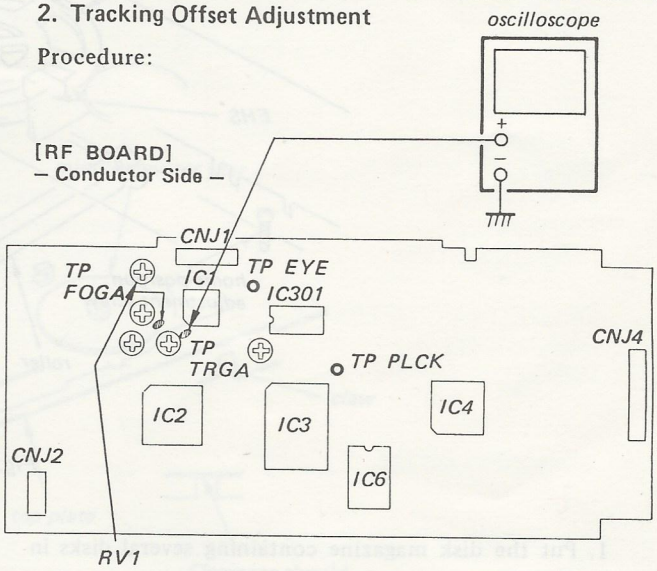

1. Connect the oscilloscope to RF board test point [TRGA], pin (1) of IC1.
2. Put the set into play mode by loading the disc.
3. Press the |◀◀ or ▶▶| (or ◀◀, ▶▶) button, then check the traverse waveform*.
4. Adjust RV1 (main board) so that oscilloscope reading is symmetrical in relation to 0 V.

*Traverse waveform: This is the tracking error waveform appears when crossing the track.

Volt/Div: 0.5 V
Time Div: 2 mSec
Center 0 V

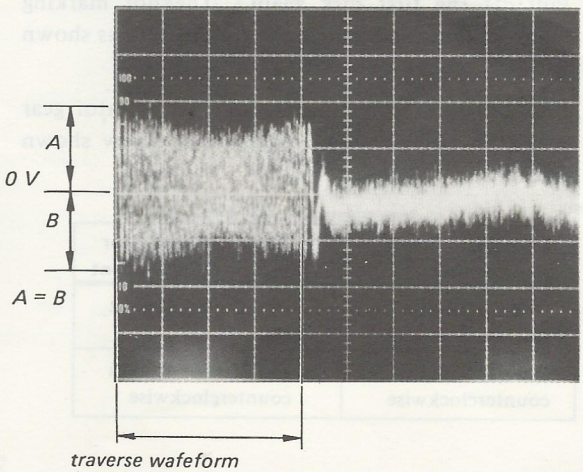

traverse wafeform
(100 track jump waveform)

3. Tracking Gain Adjustment (coarse adjustment)

This adjustment is to be performed when replacing the following parts.

- Optical Pick-up Block
- RV4

This adjustment should be performed after focus offset and tracking offset adjustments are completed.

Procedure:

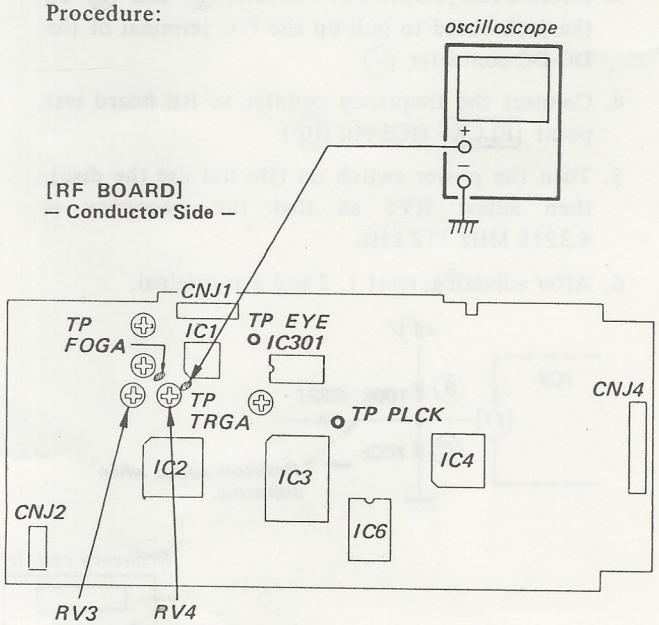

1. Connect the oscilloscope to RF board test point TRGA.
2. Put the set into play mode by loading the disc.
3. Turn RF board RV4 from clockwise stop, then check the oscilloscope waveform.
   Fix RV4 at the position where the waveform disappears.

Volt/Div: 0.5 V
Time/Div: 2 mSec

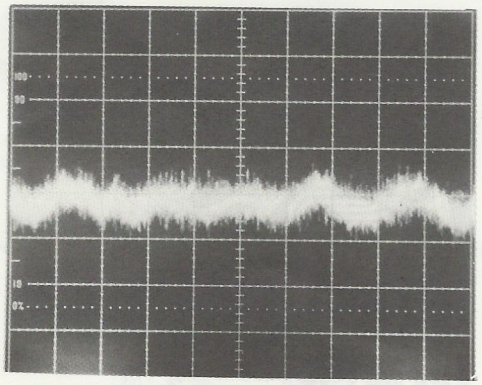

waveform when the wave appears

- **When gain is lowered . . .**
  When selecting by pressing |◀◀ or ▶▶| button, brake application is poor because of low tracking gain. Therefore, the traverse waveform appears after the 100 track jump waveform, then the selection will be located slowly.

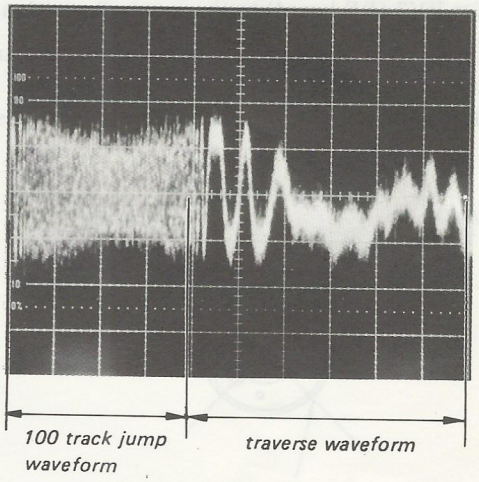

- **When gain is highered . . .**
  Operation noise is heard due to a scratch or dust, then operation will be instability.

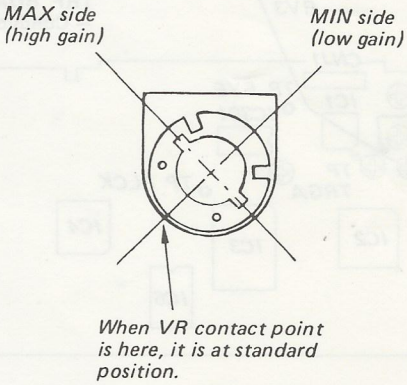

RV3 standard position

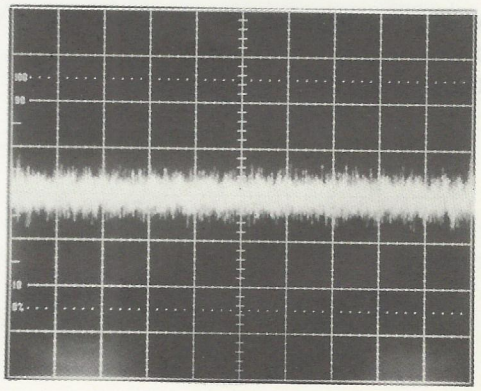

waveform when the wave disappeared

4. Focus Gain Adjustment (coarse adjustment)

This adjustment is to be performed when replacing the following parts.

- Optical Pick-up Block
- RV3

Procedure:

1. Set RV3 (RF board) to the standard position.
2. Check that there is not an abnormal amount of operation noise (white noise) from the 2-axis devise. If there is, turn RV3 slightly clockwise.

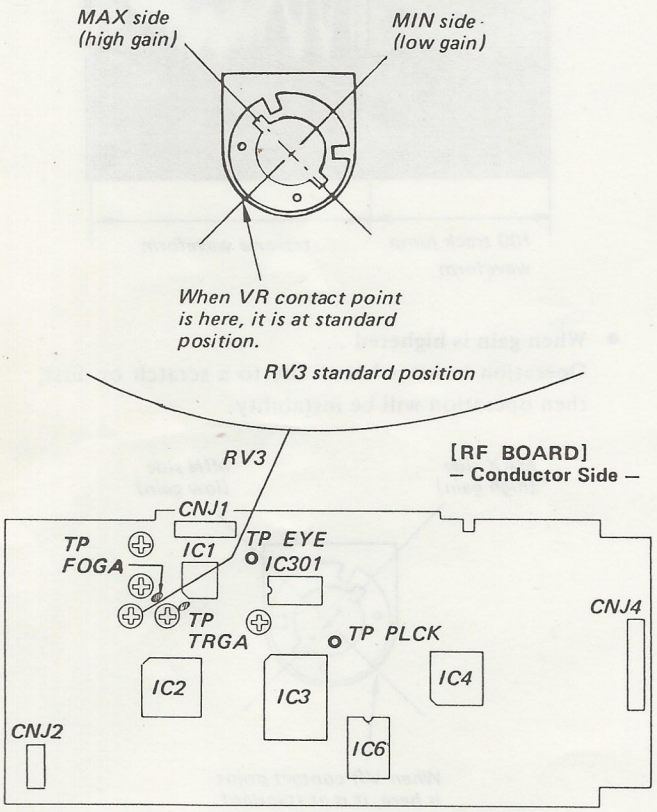

- **When gain is highered . . .**
  The set does not play because of no focus operation.
- **When gain is highered . . .**
  Operation noise is heard due to a scratch or a dust, then operation will be unstable.

5. PLL Freerun Frequency Adjustment

Procedure:

1. Unsolder the solder bridge at Ⓐ (IC3 pin ⑤ is opened)
2. Connect 100 kΩ resistors to Ⓑ, Ⓒ. (This is to set the IC3 pin ⑪ voltage to 2.5 V)
3. Install a test jumper wire between Ⓓ and Ⓔ on the jack board to pull up the P/C terminal of the DC-DC converter ⊖.
4. Connect the frequency counter to RF board test point PLCK (IC3 pin ⑦⓪).
5. Turn the power switch on (Do not use the disc), then adjust RV5 so that the frequency is 4.3218 MHz ±10 kHz.
6. After adjusting, reset 1, 2 and 3 as original.

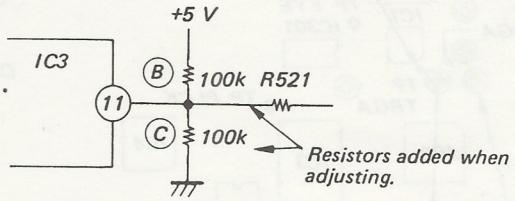

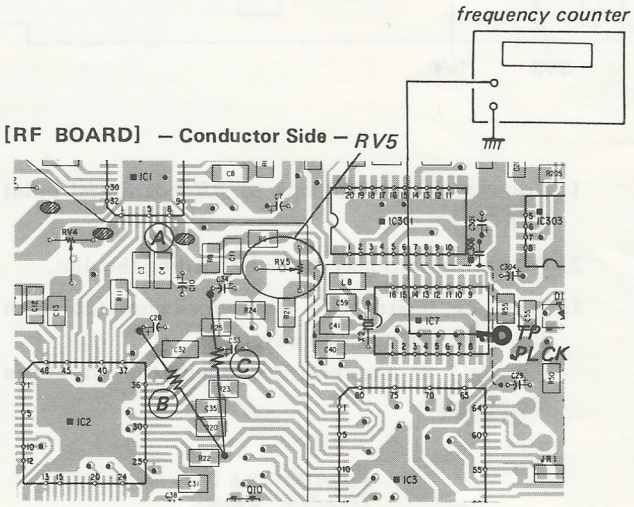

[JACK BOARD] – Conductor Side –

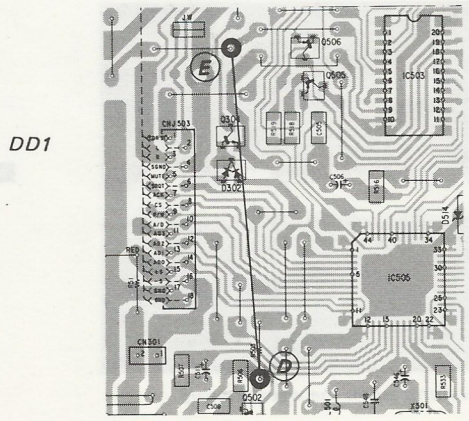

RF PRINTED WIRING BOARD

Note:

- ○——— : parts extracted from the component side.
- •——— : parts extracted from the conductor side.
- ● : Through hole.
- ▒ : Pattern on the side which is seen.
- ▒ : Pattern of the rear side.

• Semiconductor Location

Ref. No.	Location
D1	F-14
IC1	E-10
IC2	G-10
IC3	G-12
IC4	F-15
IC5	E-7
IC6	H-14
IC7	F-13
IC301	E-12
IC302	D-12
IC303	E-14
IC304	D-17
Q1	D-11
Q2	F-8
Q3	F-8
Q4	F-8
Q5	F-7
Q6	F-14
Q8	E-14
Q9	H-11
Q10	G-11
Q101	E-15
Q201	E-15
Q301	D-16
Q302	D-16

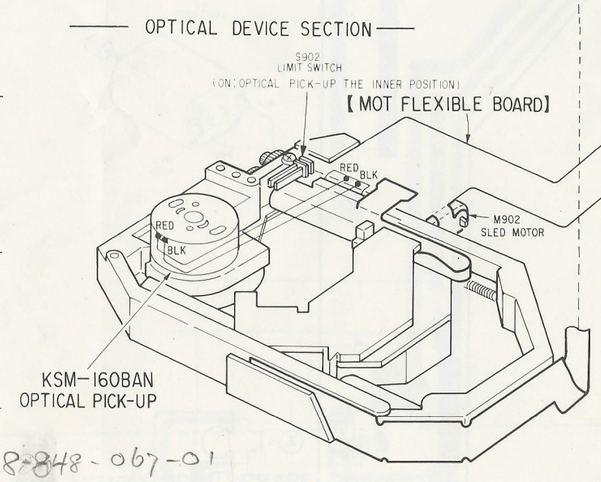

8-848-067-01

#205

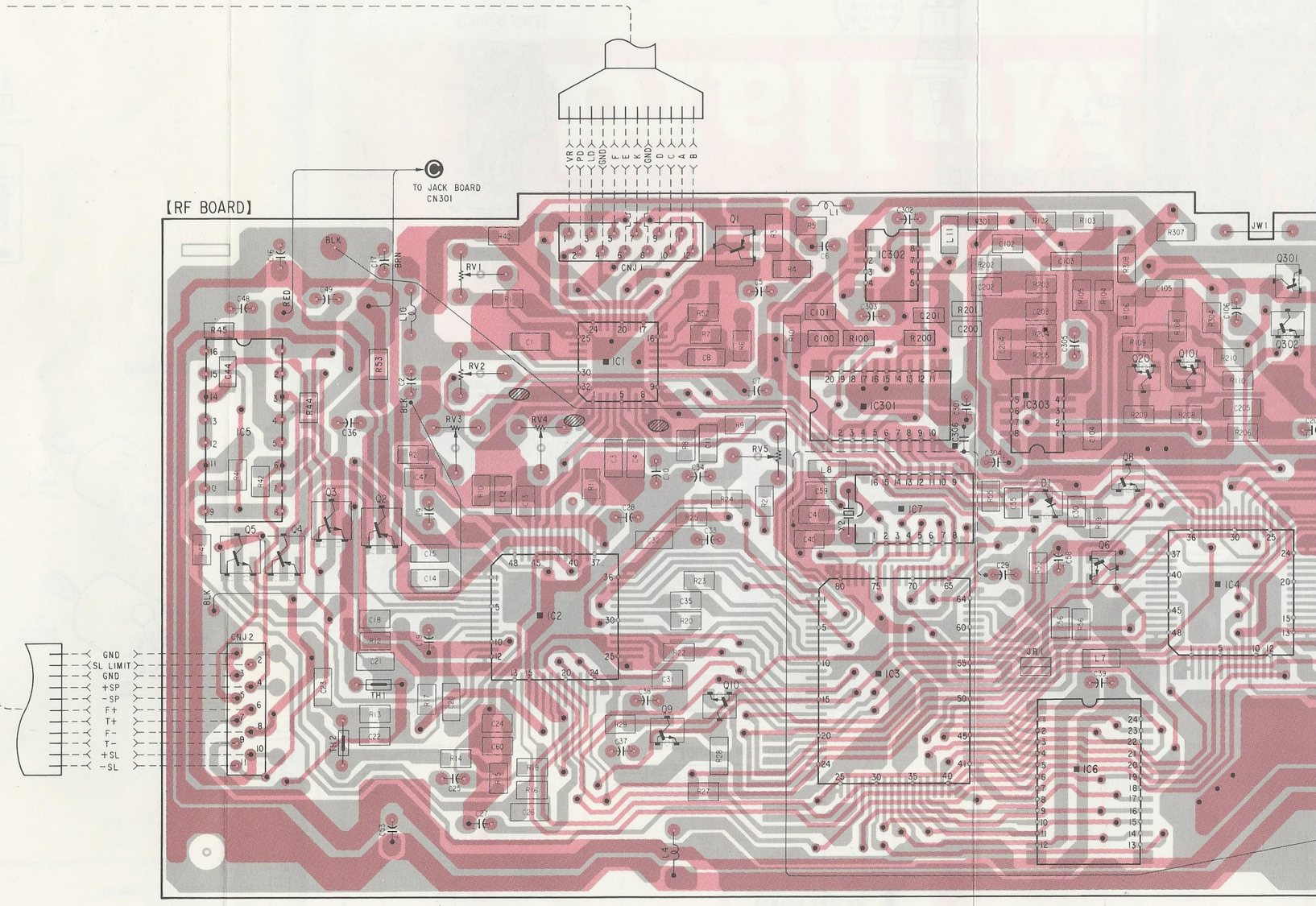

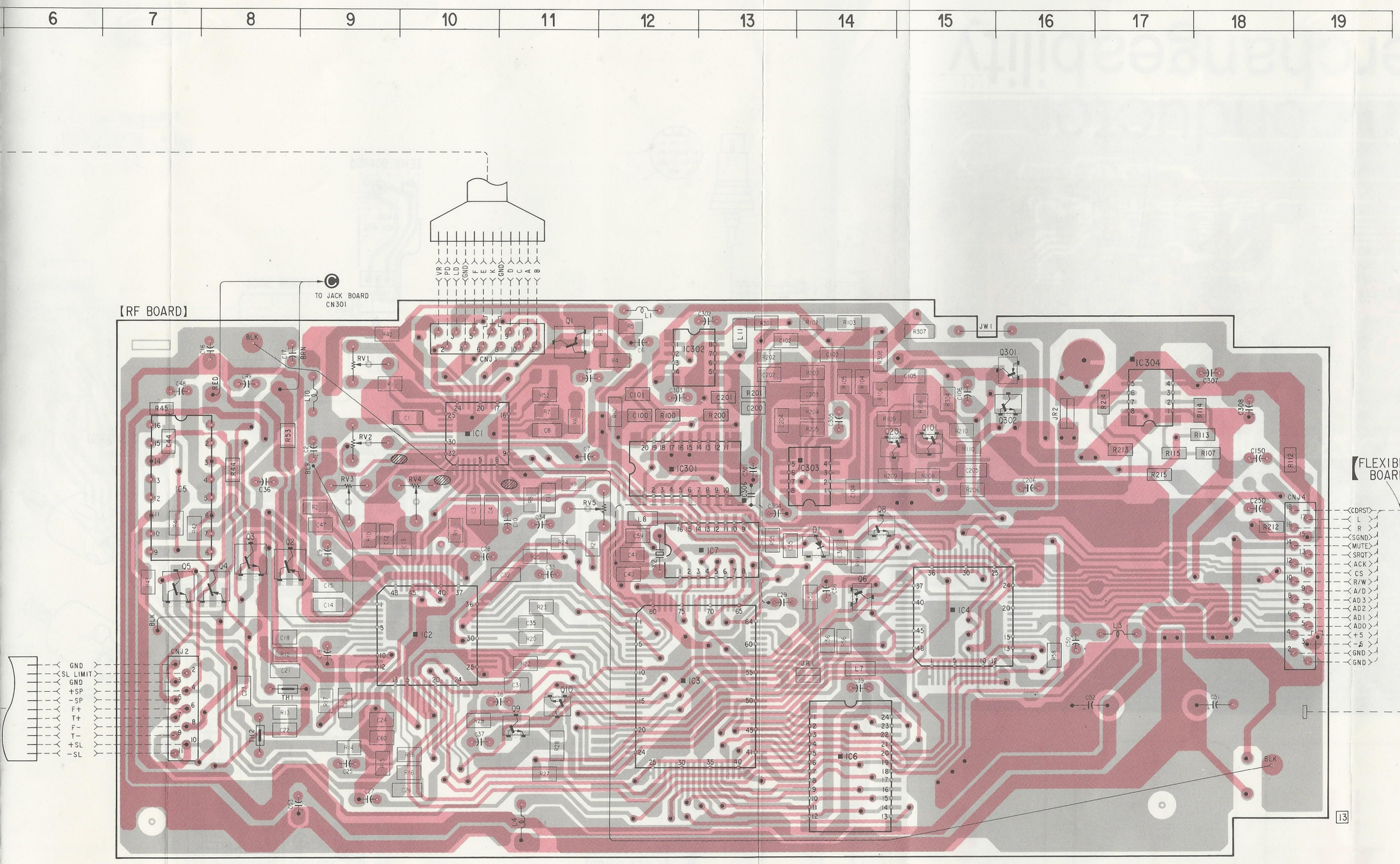

IC BLOCK DIAGRAMS

IC1 CXA1081Q

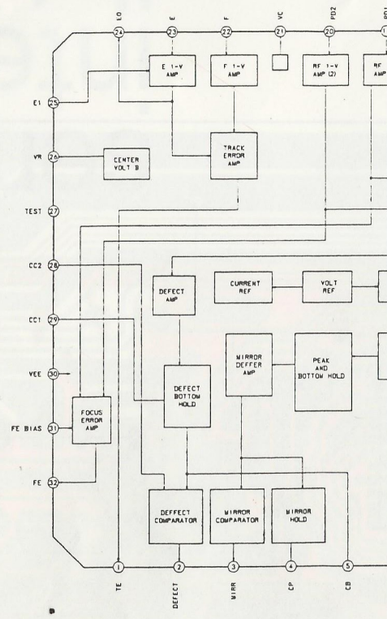

IC5 LA6530

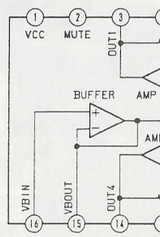

IC501, 507 LB164

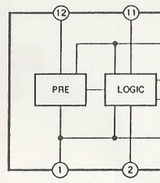

15	16	17	18	19

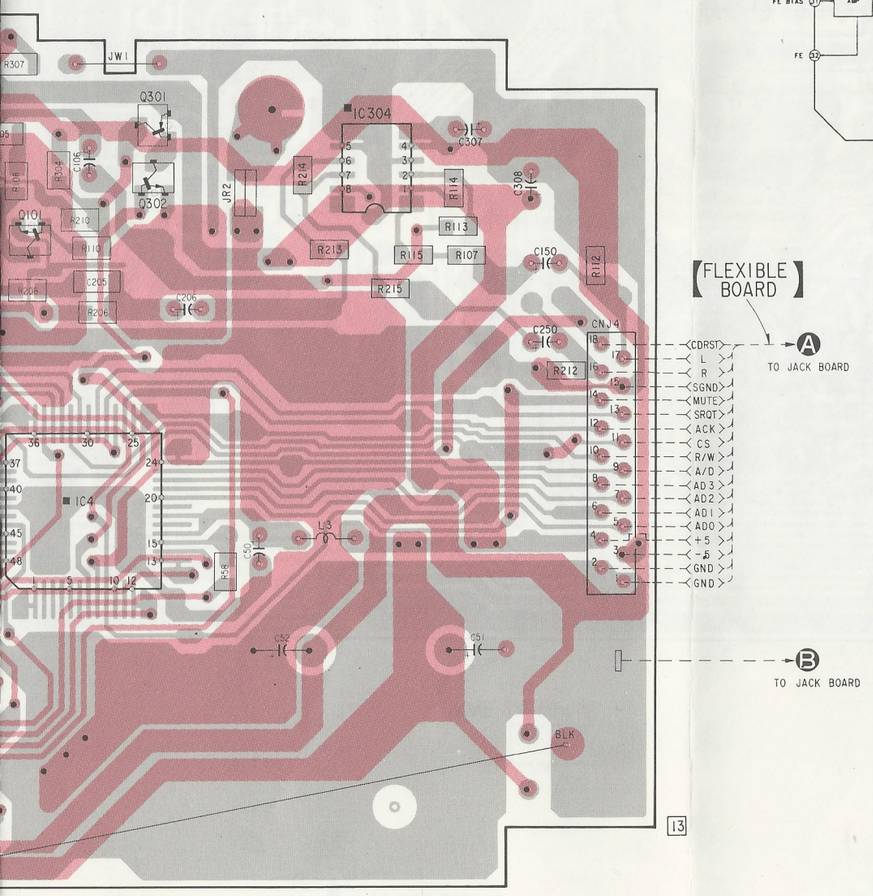

IC BLOCK DIAGRAMS

IC1 CXA1081Q

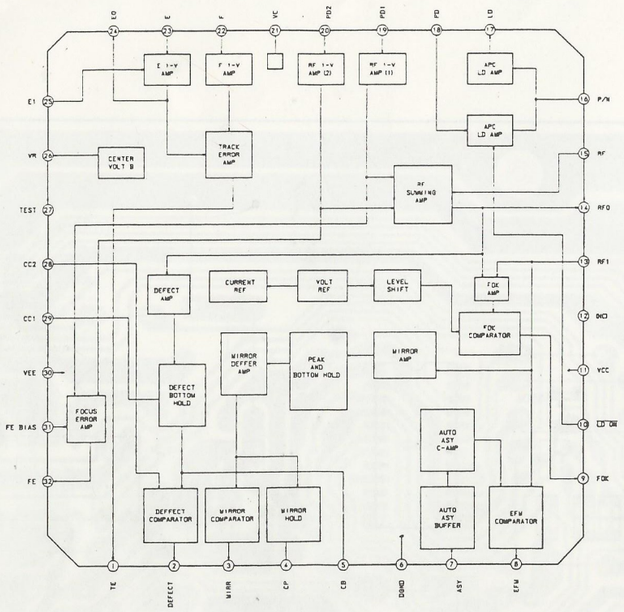

IC2 CXA1082Q

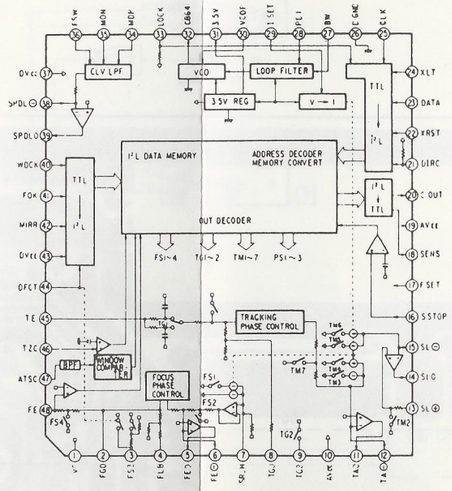

IC3 CXD1125Q

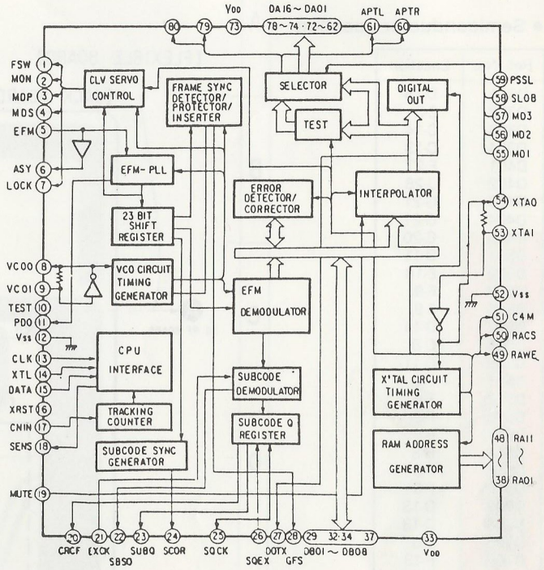

IC5 LA6530

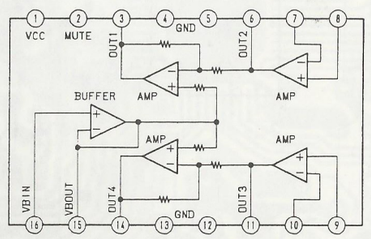

IC7 CXD1316DM

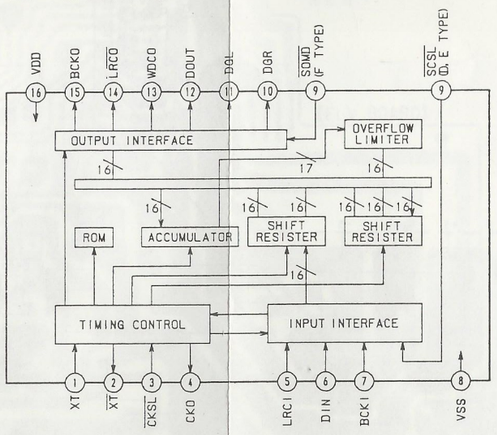

IC301 CXD1161M-2

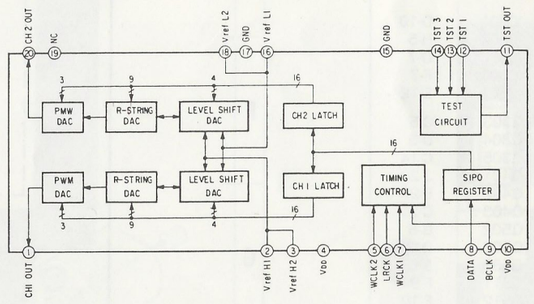

IC501, 507 LB1649

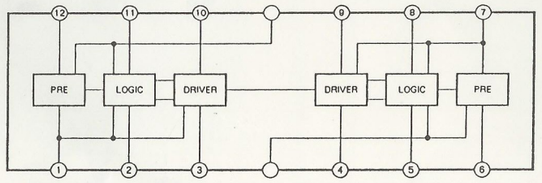

IC502 S-8054HN-CB

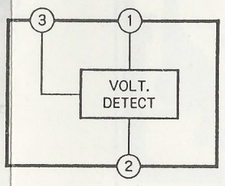

IC503 CX-7991

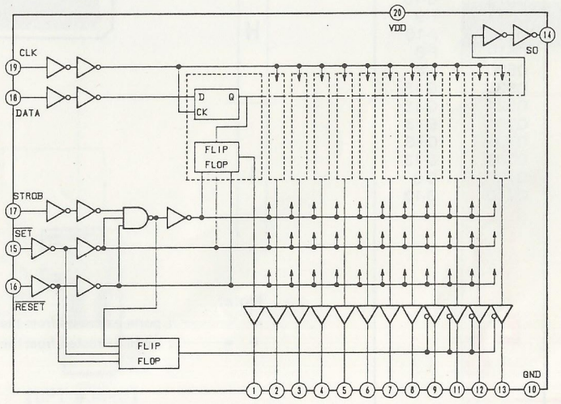

OTHER PRINTED WIRING BOARDS

• Semiconductor Location

Ref. No.	Location
D301	D-15
D302	E-5
D303	C-14
D304	C-13
D401	E-27
D402	J-28
D403	G-21
D404	G-21
D405	G-20
D501	D-11
D502	E-10
D503	F-9
D505	F-9
D507	G-11
D508	G-8
D509	D-11
D511	F-8
D512	F-8
D513	F-9
D514	E-8
D515	H-8
D516	F-8
D518	F-8
D703	D-13
D704	D-13
D705	C-8
D706	F-13
D707	D-12
D708	D-14
D709	F-14
D710	D-8
IC501	D-10
IC502	H-5
IC503	D-7
IC505	F-7
IC507	E-12
Q303	C-5
Q304	D-5
Q305	C-14
Q401	J-28
Q402	E-27
Q403	C-21
Q502	G-6
Q505	D-6
Q506	D-6
Q511	F-9
Q512	F-10
Q513	F-9
Q514	F-10
Q515	E-9
Q516	G-10
Q517	F-9
Q518	F-10
Q519	F-8
Q520	F-8
Q523	G-15
Q524	G-15
Q704	E-13
Q705	C-13
Q706	D-13
Q707	D-9
Q710	D-12

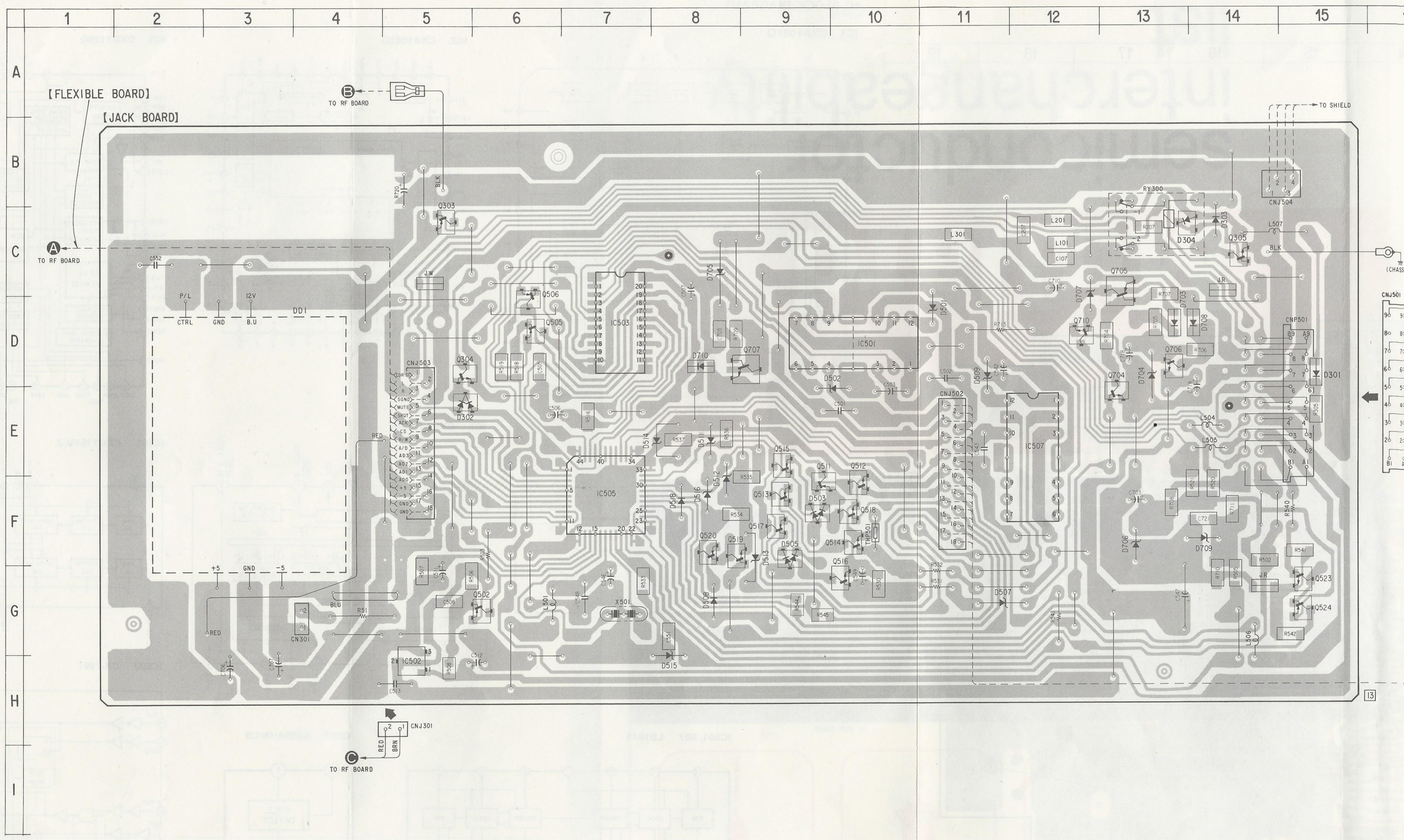

Note:
- ○——— : parts extracted from the component side.
- ●——— : parts extracted from the conductor side.

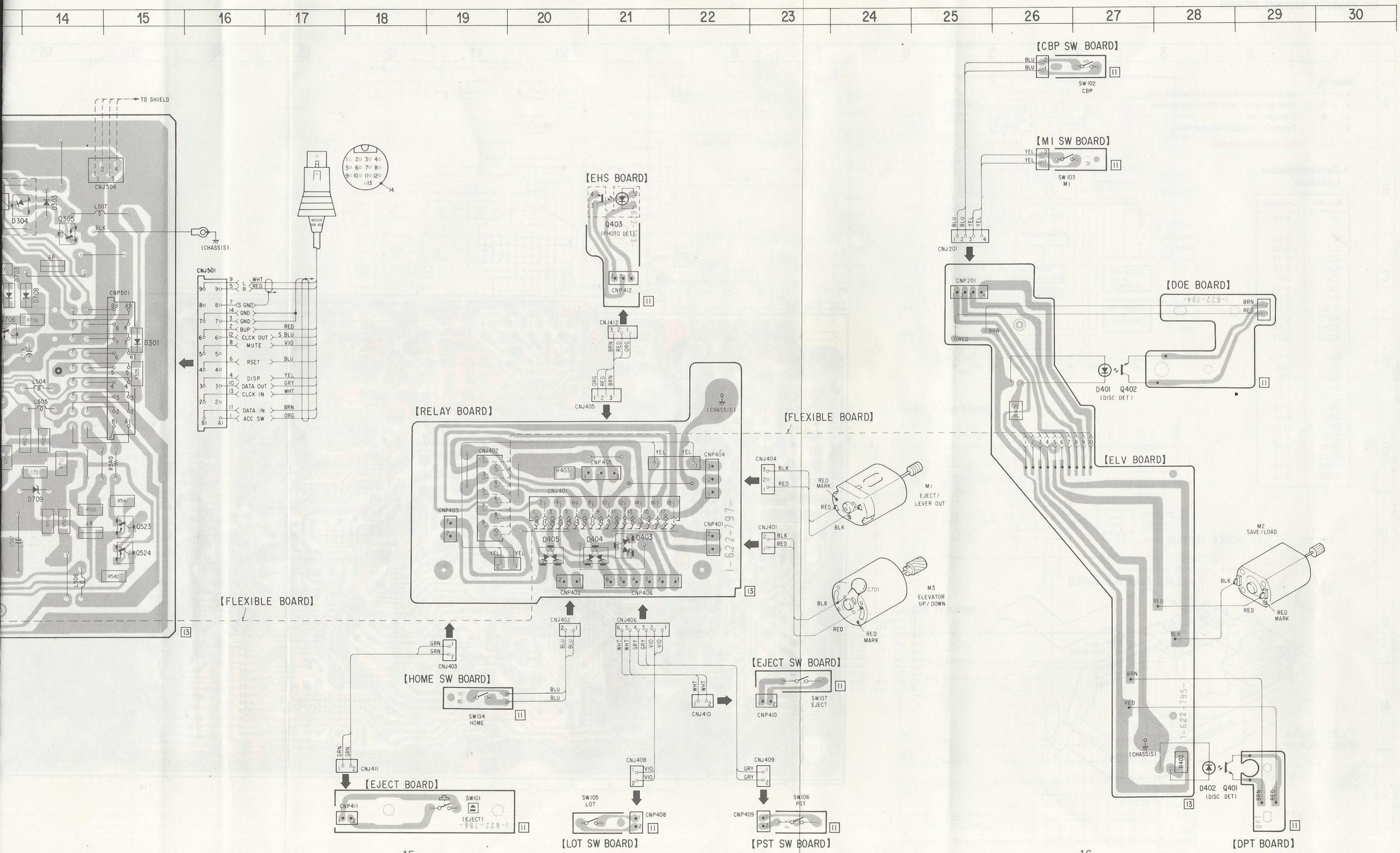
14 15 16 17 18 19 20 21 22 23 24 25 26 27 28 29 30
TO SHIELD
CNJ504
L507
D304
D303
Q305
BLK
(CHASSIS)
JR
CNP501
D301
L504
L505
R540
D709
Q523
Q524
R542
L506
CNJ501
WHT
RED
L
R
S GND
GND
GND
BUP
CLCK OUT
MUTE
RSET
DISP
DATA OUT
CLCK IN
DATA IN
ACC SW
S BLU
VIO
BLU
YEL
GRY
WHT
BRN
ORG
[EHS BOARD]
Q403
(PHOTO DET)
CNP412
CNJ412
CNJ405
[RELAY BOARD]
(CHASSIS)
CNJ402
CNP405
R403
CNJ401
CNP404
CNP403
D405
D404
D403
CNP401
CNP402
CNP406
1-622-797-
[FLEXIBLE BOARD]
CNJ404
BLK
RED
RED MARK
M1
EJECT/
LEVER OUT
CNJ401
M3
ELEVATOR
UP/DOWN
C701
[CBP SW BOARD]
BLU
SW102
CBP
[MI SW BOARD]
YEL
SW103
MI
CNJ201
CNP201
[DOE BOARD]
BRN
D401
Q402
(DISC DET)
R401
[ELV BOARD]
M2
SAVE/LOAD
1-622-795-
D402
Q401
(DISC DET)
R402
DPT
[DPT BOARD]
CNJ403
GRN
[HOME SW BOARD]
SW104
HOME
CNJ411
[EJECT BOARD]
CNP411
SW101
(EJECT)
1-622-796-
CNJ406
CNJ410
[EJECT SW BOARD]
SW107
EJECT
CNP410
CNJ408
SW105
LOT
CNP408
[LOT SW BOARD]
CNJ409
SW106
PST
CNP409
[PST SW BOARD]

SCHEMATIC DIAGRAM

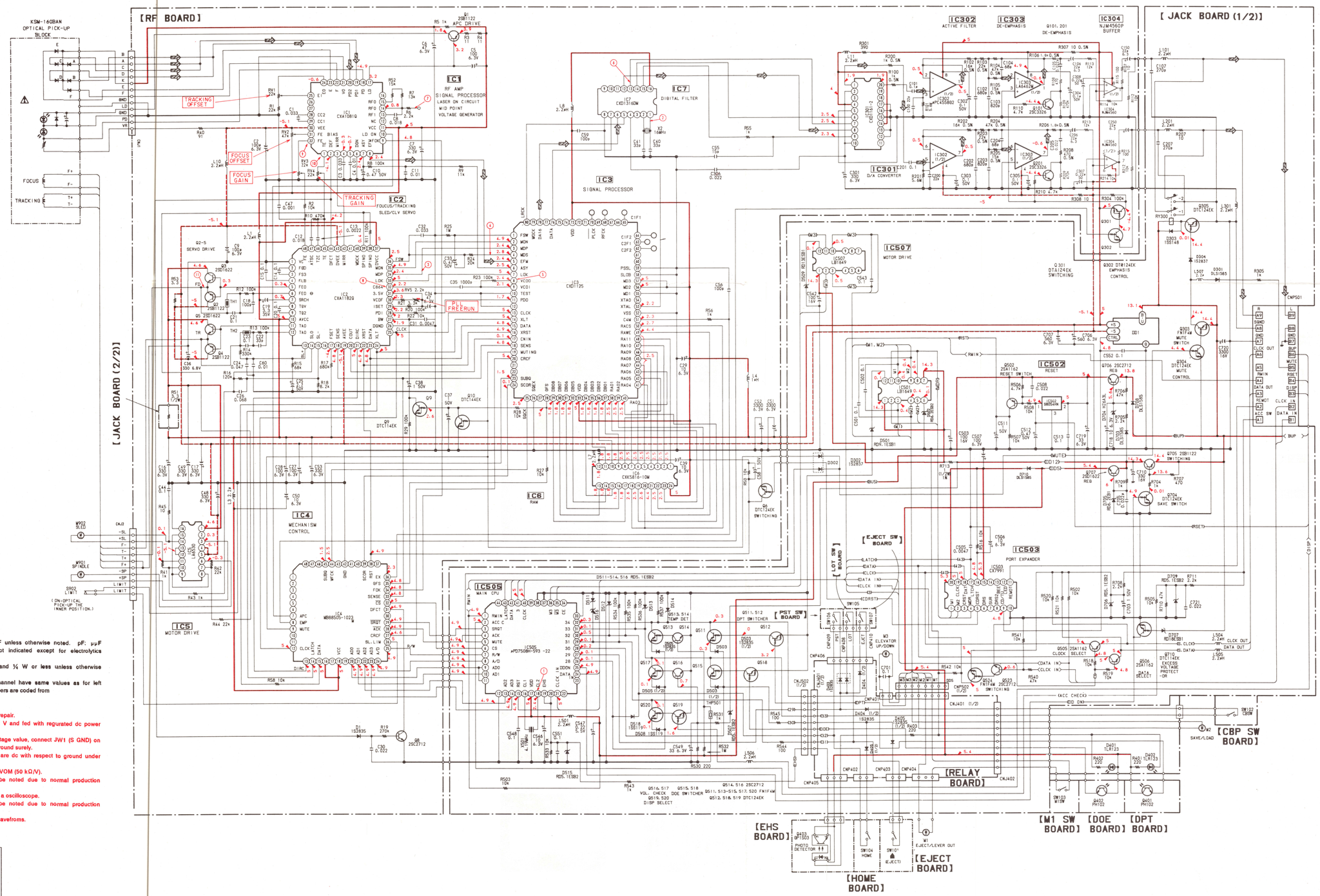

Note:

- All capacitors are in μF unless otherwise noted. pF: μμF 50 WV or less are not indicated except for electrolytics and tantalums.
- All resistors are in Ω and ¼ W or less unless otherwise specified.
- Components for right channel have same values as for left channel. Reference numbers are coded from
- ▬▬ : B + Line.
- ▬▬ : B − Line.
- ▭ : adjustment for repair.
- Power voltage is dc 14.4 V and fed with regurated dc power supply from CNJ1.
- On the measuring the voltage value, connect JW1 (S GND) on RF board to the chassis ground surely.
- Voltages and waveforms are dc with respect to ground under PLAY mode conditions.
- Voltages are taken with a VOM (50 kΩ/V). Voltage variations may be noted due to normal production tolerances.
- Wavefroms are taken with a oscilloscope. Voltage variations may be noted due to normal production tolerances.
- Circled numbers refer to wavefroms.
- Signal path.
  ⇨ : CD

Note:
The components identified by mark ⚠ or dotted line with mark ⚠ are critical for safety.
Replace only with part number specified.

SEMICONDUCTOR LEAD LAYOUTS

CXA1081Q

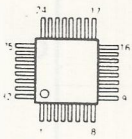

CXD1125Q

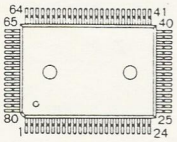

MARKING SIDE VIEW

CXK5816M-15L

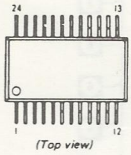

(Top view)

LA6462M
μPC4558G2

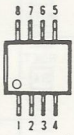

(TOP VIEW)

CXA1182Q-Z
MB88505H-1023M

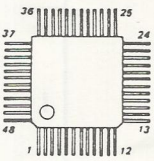

CXD1316DM

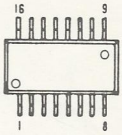

(TOP VIEW)

CXD1161M-2
CX-7991

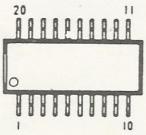

(TOP VIEW)

μPD7508HG-593-22

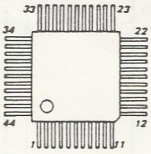

GP-1S03

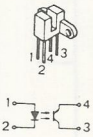

DLS1585

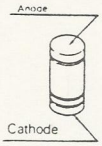

RD13ES-B1
RD18ES-B1
RD5.1ES-B2
RD6.2ES-B2
RD9.1ES-B1
1SS119

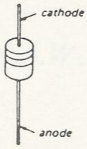

PH102-L

HZ6A2L

TLR123

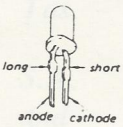

IC503 CX7991 PIN FUNCTION DESCRIPTION

Pin No.	Description
1 – 8	Parallel output terminal. The internal register status is loaded and output using a strobe signal. When a set signal is input, "1" is output. When a reset signal is input, "0" is output.
9, 11 – 13	Parallel output terminal. The internal register status is loaded and output using a strobe signal. When a set or reset signal is input, the output becomes high impedance. The output is then enabled using a strobe signal.
10	GND
14	Serial data output terminal.
15	Set signal input terminal. Becomes active when low. When this pin is set low, the latch is set and "1" is output to pins 1 through 8 irrespective of the internal register status. Pins 9, 11, 12, and 13 then becomes high impedance.
16	Reset signal input terminal. Becomes active when low. When this pin is set low, the latch is reset and "0" is output to pins 1 through 8 irrespective of the internal register status. Pins 9, 11, 12, and 13 then becomes high impedance.
17	Strobe signal input terminal. Becomes active when high. When this pin is set high, the internal register status is shifted to the latch status.
18	Serial data input terminal. The external serial data is input.
19	Clock signal input terminal. Data is loaded when the system is initiated.
20	Power supply

WAVEFORMS

❶ IC505 pin ⑱

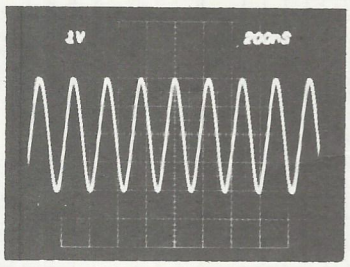

❷ IC7 pin ①

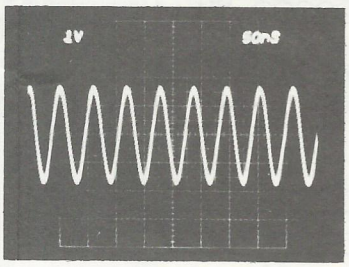

❸ IC2 pin ㉞, IC3 pin ③

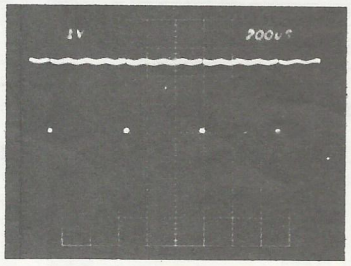

❹ IC3 pin ④

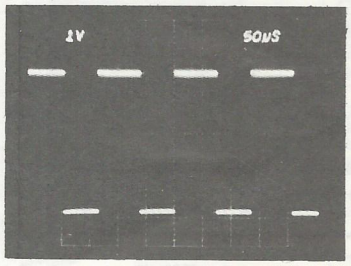

❺ IC3 pin ⑧

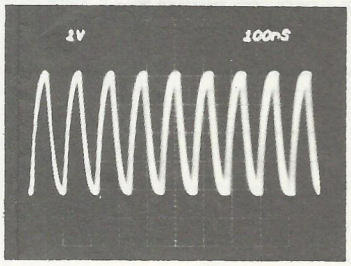

❻ IC7 pin ⑬

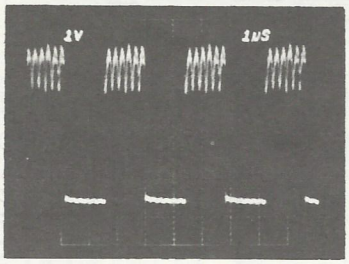

❼ IC1 pin ⑭

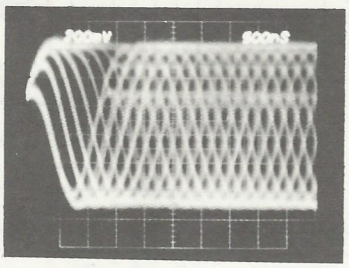

❽ IC2 pin ㉜

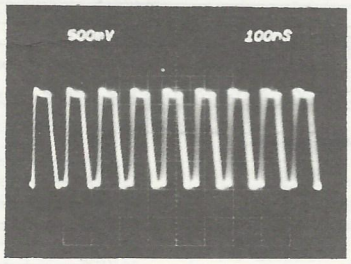

❾ IC1 pin ㉜

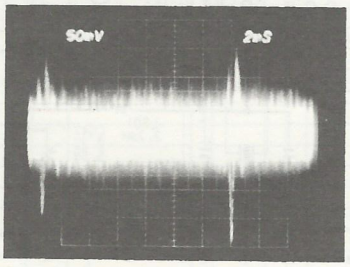

❿ IC1 pin ①

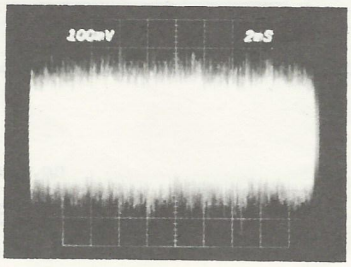

⓫ Q2, 3 emitter

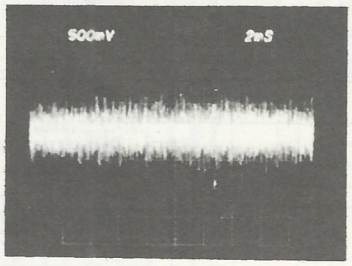

EXPLODED VIEWS

NOTE:

- The mechanical parts with no reference number in the exploded views are not supplied.
- Items marked "★" are not stocked since they are seldom required for routine service. Some delay should be anticipated when ordering these items.
- Due to standardization, parts with part number suffix -XX and -X may be different from the parts specified in the components used on the set.

The components identified by mark ⚠ or dotted line with mark ⚠ are critical for safety. Replace only with part number specified.

(1)

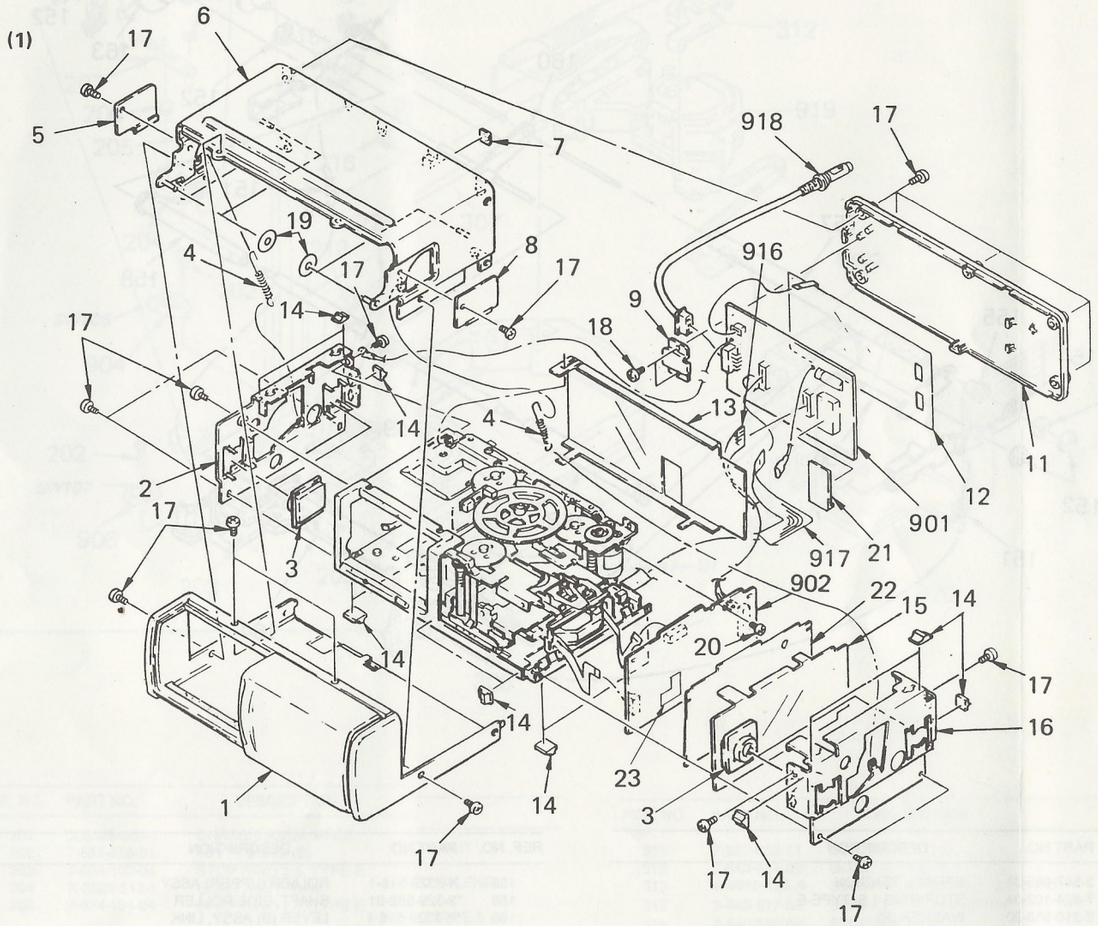

REF. NO.	PART NO.	DESCRIPTION
1	X-3329-	PANEL ASSY, FRONT
2	*3-348-742-01	BRACKET (0 DAMPER LEFT)
3	3-348-583-01	DAMPER (OIL)
4	3-348-584-01	SPRING (FLOATING), TENSION
5	*3-333-069-21	COVER (LEFT), SIDE
6	X-3329-589-1	CASE ASSY, UPPER
7	3-831-441-11	CUSHION
8	*3-333-070-21	COVER (RIGHT), SIDE
9	3-333-065-01	RETAINER, 18P CONNECTOR
11	*3-333-078-31	CASE, BOTTOM
12	*3-348-726-01	PLATE (VA), SHIELD
13	*3-333-066-01	SHEET (LARGE), INSULATING

REF. NO.	PART NO.	DESCRIPTION
14	*3-348-750-01	CUSHION (DAMPER)
15	*3-333-073-01	SHEET (SMALL), INSULATING
16	*3-348-743-01	BRACKET (0 DAMPER RIGHT)
17	7-682-546-09	SCREW +B 3x5
18	7-685-133-19	SCREW +BTP 2.6x6 TYPE2 N-S
19	3-348-749-01	WASHER (TEFLON)
20	7-621-770-87	SCREW +BVTT 2.6x5 (S)
21	*3-343-739-01	PLATE, PROTECTION, FLEXIBLE
22	*3-348-765-01	PLATE (SMALL), SHIELD
23	*3-348-766-01	PLATE (5A), SHIELD
901	*A-3265-018-A	MOUNTED PCB, JACK
902	*A-3265-019-A	MOUNTED PCB, RF
916	1-623-641-11	PC BOARD, RF FLEXIBLE
917	1-623-642-12	PC BOARD, TRANSLATION FLEXIBLE
918	1-559-439-11	CORD (WITH CONNECTOR)

(2)

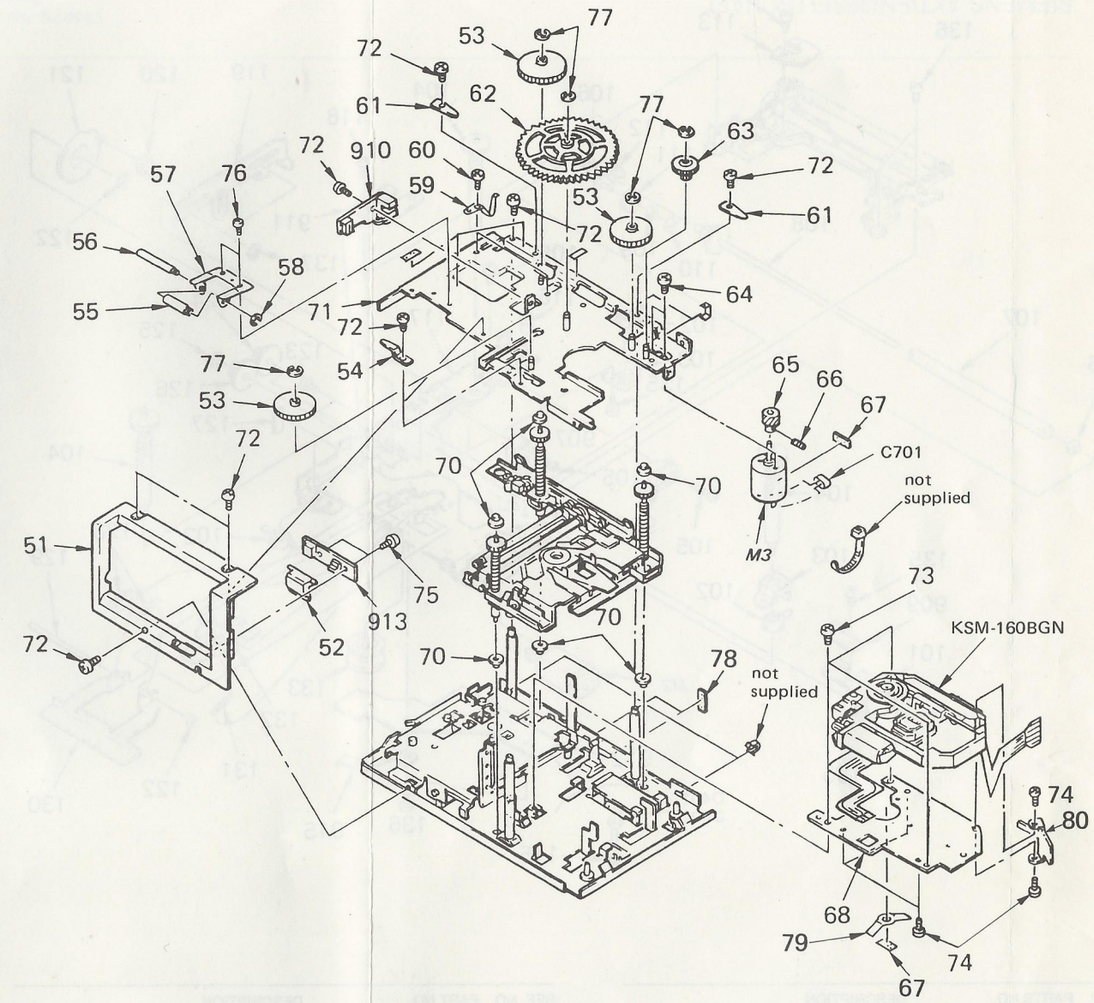

REF. NO.	PART NO.	DESCRIPTION
51	3-343-724-03	ESCUTCHEON
52	3-343-712-01	BUTTON, EJECT
53	3-331-916-02	GEAR (MIDDLE), ELEVATOR
54	*3-333-082-01	RETAINER, SCREW, FEED
55	3-343-708-01	ROLLER, MAGAZINE
56	*3-343-711-01	SHAFT, ROLLER, MAGAZINE
57	3-343-710-02	SPRING
58	7-624-102-04	STOP RING 1.5, TYPE-E
59	3-343-709-02	SPRING
60	7-621-775-00	SCREW +B 2.6 x 3
61	3-331-907-01	RETAINER, SCREW, FEED
62	3-331-952-02	GEAR (LARGE), ELEVATOR
63	3-343-707-01	GEAR (SMALL), ELEVATOR
64	7-682-144-01	SCREW +P 3 x 3
65	4-917-404-02	GEAR, MOTOR

REF. NO.	PART NO.	DESCRIPTION
66	7-621-731-08	SET-SCT, HEX. 2x2.5, FLAT POINT
67	3-831-441-11	CUSHION
68	*3-343-714-03	BRACKET, FOP
70	3-333-081-01	BEARING (UPPER & LOWER)
71	*X-3329-567-4	PLATE ASSY, TOP
72	7-685-791-09	SCREW +BVTT 2.6 x 5 (S)
73	7-621-255-25	SCREW +BVTT 2 x 4 (S)
74	7-685-103-14	SCREW +P 2 x 5 TYPE 2 NON-SLIT
75	7-685-132-19	SCREW +P 2.6 x 5 TYPE 2 NON-SLIT
76	7-627-553-17	PRECISION SCREW +P 2 x 2 TYPE 3
80	*3-343-741-01	PLATE, GROUND
77	7-624-118-04	RING, RETAINING E-2.5
78	3-568-749-00	CUSHION, ECM
79	3-348-767-01	SPRING (MOTOR GROUND)
910	*1-622-793-12	PC BOARD, EHS
913	*1-622-796-12	PC BOARD, EJECT
C701	1-136-165-11	CAP, METALIZED FILM 0.1 MF
M3	1-541-309-11	MOTOR, L (RF-370C)

(3)

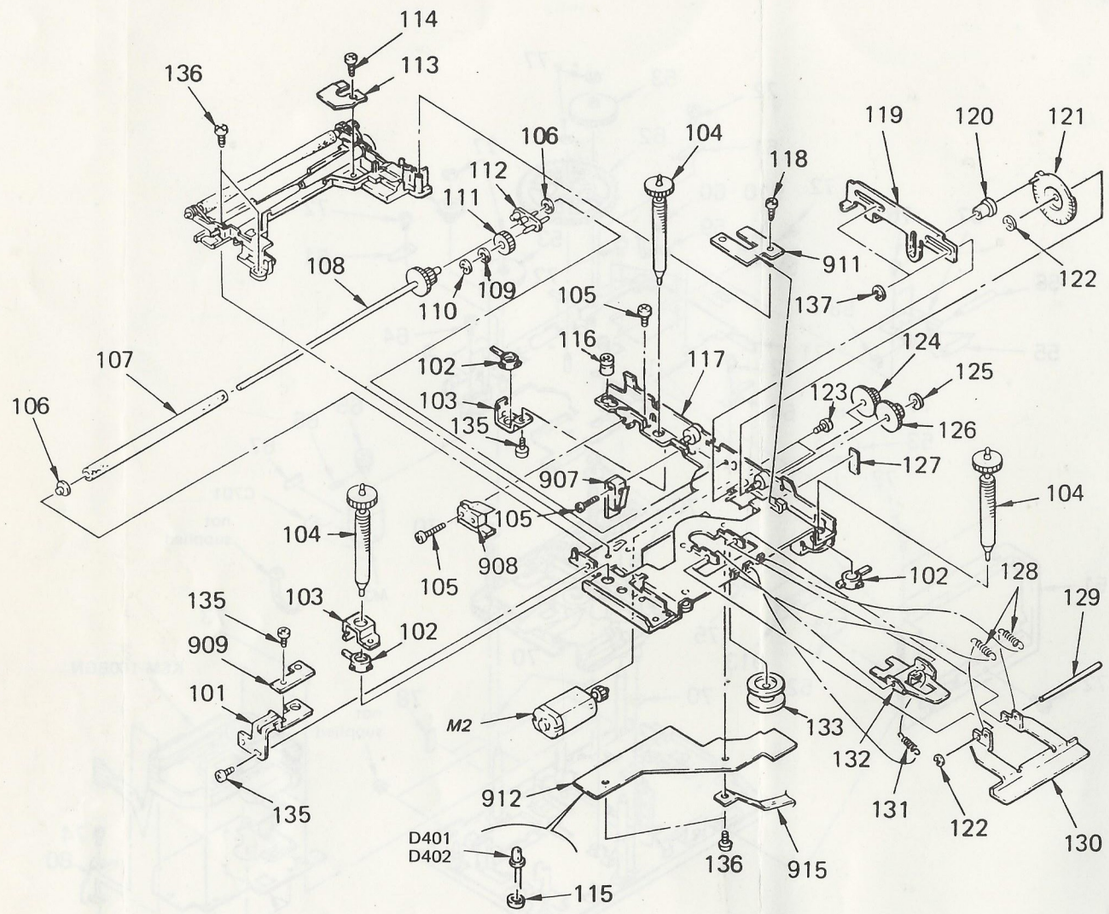

REF. NO.	PARTS NO.	DESCRIPTION
101	*3-333-092-01	BRACKET (S), PHOTO
102	3-329-560-01	SCREW, M6
103	*3-329-570-03	PLATE, SCREW
104	X-3329-554-1	SCREW ASSY, FEED
105	7-621-772-40	SCREW +B 2 x 8
106	3-329-558-01	BEARING, MAIN ROLLER
107	3-323-231-02	ROLLER (LOWER)
108	X-3329-520-1	SHAFT (LOWER) ASSY, ROLLER
109	3-329-553-01	SPRING, E
110	3-321-813-11	WASHER, COTTER POLYETHYLENE
111	3-329-555-11	GEAR (E), R
112	*X-3329-522-2	LEVER ASSY, R
113	*3-333-006-01	REINFORCEMENT
114	7-621-770-67	SCREW +B 2.6 x 6
115	*3-330-994-01	SPACER (LED)
116	3-329-551-01	METAL, SHAFT
117	*X-3329-565-6	CHASSIS ASSY, E
118	7-685-132-11	SCREW +P 2.6x5 TYPE 2 NON-SLIT
119	*3-331-944-04	LEVER, SLIDE
120	3-329-547-03	ROLLER, IDLE
121	3-331-943-01	GEAR (F), R

REF. NO.	PART NO.	DESCRIPTION
122	7-624-102-04	STOP RING 1.5, TYPE-E
123	7-621-255-10	SCREW +P 2 x 3
124	3-333-099-02	GEAR (A)
125	3-895-818-01	WASHER, POLYETHYLENE, COTTER
126	3-343-701-02	GEAR (B)
127	3-831-441-11	CUSHION
128	3-571-823-01	SPRING, TENSION
129	3-333-098-03	SHAFT, DISK CHUCK
130	*X-3329-566-1	STOPPER ASSY, CD
131	3-535-369-XX	SPRING, TENSION
132	3-343-718-02	BRACKET, DISK CHUCK
133	3-343-717-02	PLATE (M), CHUCK
135	7-621-255-25	SCREW +BVTT 2 x 4 (S)
136	7-685-791-09	SCREW +BVTT 2.6 x 5 (S)
137	7-624-104-04	STOP RING 2.0, TYPE-E
907	*1-622-790-12	PC BOARD, MI
908	*1-622-791-12	PC BOARD, CB
909	*1-622-792-13	PC BOARD, DPT
911	*1-622-794-13	PC BOARD, DOE
912	*1-622-795-11	PC BOARD, LED
915	1-623-640-11	PC BOARD, MD FLEXIBLE
M2	X-3329-560-2	MOTOR ASSY, M2

(4)

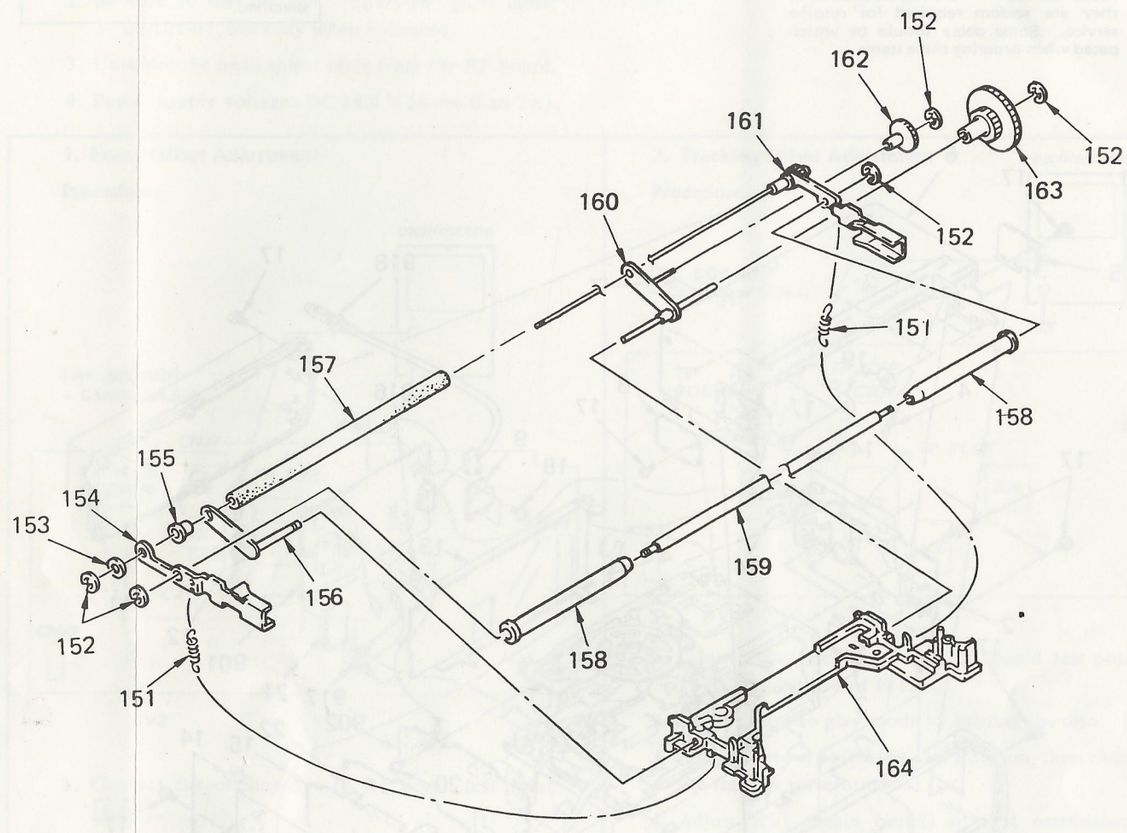

REF. NO.	PART NO.	DESCRIPTION
151	3-547-665-01	SPRING, TENSION
152	7-624-102-04	STOP RING 1.5, TYPE-E
153	3-310-958-00	WASHER (R)
154	3-343-706-01	LINK, DISK
155	*3-331-925-01	BEARING, ROLLER STOPPER
156	*X-3329-517-1	LEVER (F) ASSY, LINK
157	3-323-231-02	ROLLER (LOWER)

REF. NO.	PART NO.	DESCRIPTION
158	X-3329-518-1	ROLLER (UPPER) ASSY
159	*3-329-552-01	SHAFT, SIDE ROLLER
160	*X-3329-516-1	LEVER (B) ASSY, LINK
161	X-3329-561-1	SHAFT (UPPER) ASSY, ROLLER
162	3-331-924-01	GEAR (G), ROLLER
163	3-331-914-02	GEAR, ROLLER 3 STEP
164	3-331-957-07	GUIDE, DISK

(5)

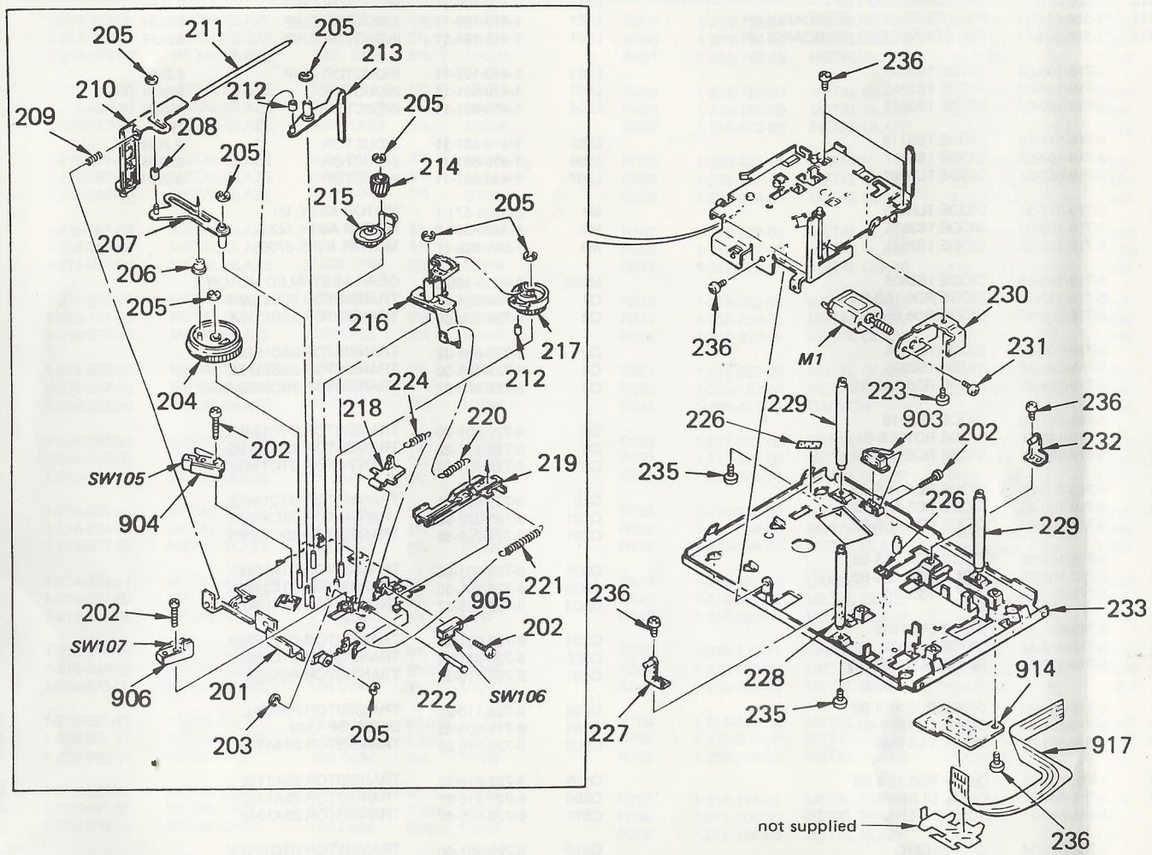

REF. NO.	PART NO.	DESCRIPTION
201	*X-3329-563-1	CHASSIS ASSY, PACK
202	7-685-855-01	+BVTT 2 x 10 (S)
203	7-624-102-04	STOP RING 1.5, TYPE-E
204	X-3329-513-1	GEAR ASSY, CAM
205	7-624-104-04	STOP RING 2.0, TYPE-E
206	3-331-905-01	ROLLER (A)
207	*X-3329-507-3	LEVER ASSY, LINEAR
208	3-331-927-01	ROLLER, LINEAR LEVER
209	3-568-315-01	SPRING, COMPRESSION
210	X-3329-558-1	SLIDER ASSY, LINEAR
211	3-331-904-01	SHAFT, LINEAR SLIDER
212	3-329-580-01	ROLLER, CAM
213	*X-3329-510-6	LEVER ASSY, SLIDER SET
214	3-333-088-01	WHEEL, WORM
215	X-3329-557-1	GEAR ASSY
216	X-3329-511-5	LEVER ASSY, SOFT EJECT
217	3-331-951-01	GEAR (2), EJECT CAM
218	3-333-087-01	HOOK, BACK LOCK
219	*3-331-913-01	EJECTOR (2), SOFT
220	3-343-723-01	SPRING, TENSION
221	3-634-191-XX	SPRING, TENSION
222	*3-329-573-01	SHAFT, LOCK HOOK

REF. NO.	PART NO.	DESCRIPTION
223	7-628-253-95	SCREW +PS 2.6 x 4
224	3-535-369-XX	SPRING, TENSION
226	3-831-441-11	CUSHION
227	*X-3329-555-1	OPENER ASSY (A)
228	*3-333-084-02	SHAFT (B), FIXED, E
229	*3-333-083-03	SHAFT (A), FIXED, E
230	*3-343-715-01	PLATE, FIXED, MOTOR
231	7-621-775-00	SCREW +P 2.6 x 3
232	*X-3329-556-1	OPENER ASSY (B)
233	*X-3329-568-9	CHASSIS ASSY, BOTTOM
235	7-682-546-09	SCREW +B 3 x 5
236	7-685-791-09	SCREW +BVTT 2.6 x 5 (S)
903	*1-617-987-13	PC BOARD, COMMON
904	*1-622-787-12	PC BOARD, LOT
905	*1-622-788-12	PC BOARD, PS
906	*1-622-789-12	PC BOARD, EJ
914	*1-622-797-14	PC BOARD, TRANSLATION
915	1-623-640-11	PC BOARD, MD FLEXIBLE
SW105	1-570-504-11	SWITCH, MICRO (LOT)
SW106	1-570-504-11	SWITCH, MICRO (PST)
SW107	1-570-504-11	SWITCH, MICRO (EJECT)
M1	X-3329-571-2	MOTOR ASSY

(6) OPTICAL PICK-UP BLOCK (KSM-160BAN)

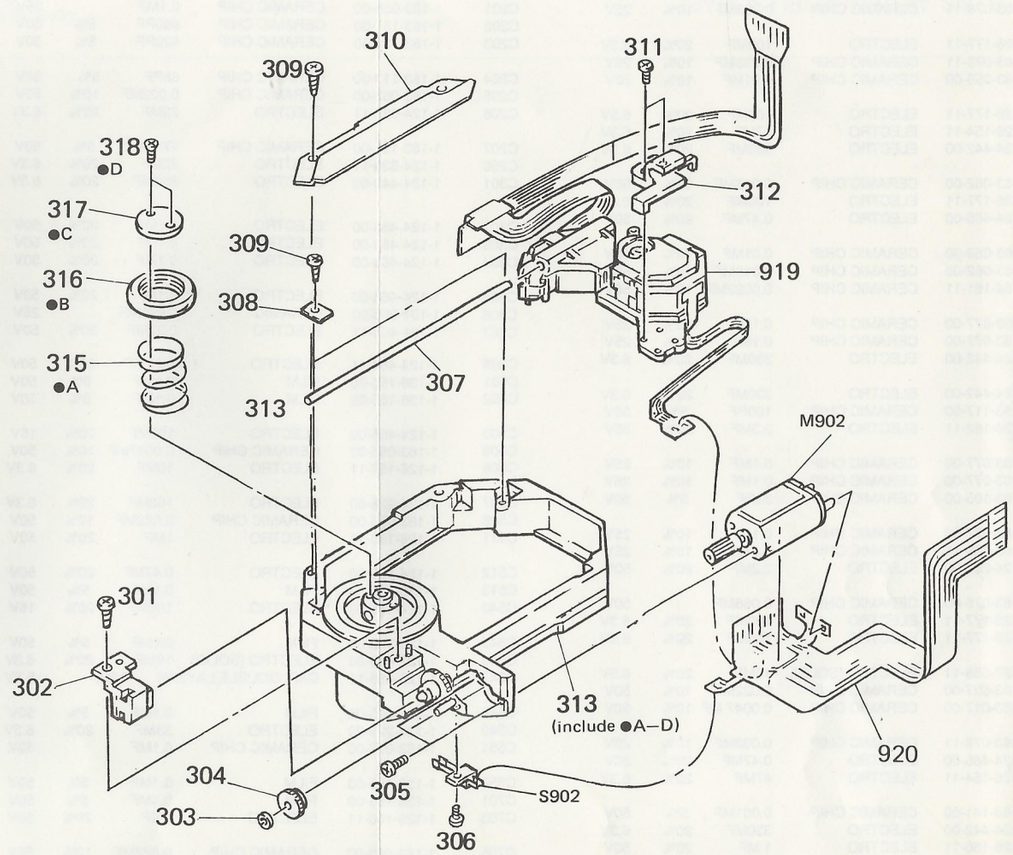

REF. NO.	PART NO.	DESCRIPTION
301	7-685-104-19	SCREW +P 2x6 TYPE 2 NON-SLIT
302	X-2640-611-1	RETAINER ASSY, THRUST
303	3-321-813-01	WASHER, COTTER POLYETHYLENE
304	2-640-625-02	GEAR (B)
305	7-627-553-37	PRECISION SCREW +P 2x3 TYPE 3
306	2-640-620-03	SCREW (B) (1.4x3), TAPPING
307	2-640-632-01	SHAFT, GUIDE
308	2-640-645-01	RETAINER, GUIDE SHAFT
309	7-685-102-19	SCREW +P 2x4 TYPE 2 NON-SLIT
310	2-640-623-01	COVER, MD

REF. NO.	PART NO.	DESCRIPTION
311	7-627-852-17	SCREW +P 1.7x4
312	2-640-654-03	GUIDE (D), FEED
313	A-4910-196-A	SCREW BLOCK ASSY, SLED MD
315	2-640-617-02	SPRING, COMPRESSION
316	2-640-650-02	STOPPER, RING
317	2-643-418-01	RING, CENTER
318	7-627-451-17	SCREW, PRECISION +K 1.4x2.5
919	⚠ 8-848-067-01	PICKUP, OPTICS KSS-160B
920	1-630-551-11	PC BOARD, ML2 FLEXIBLE
M902	A-4910-100-B	GEAR ASSY, SLED MOTOR
S902	1-554-938-11	SWITCH, LEAF

ELECTRICAL PARTS LIST

REF. NO.	PART NO.	DESCRIPTION			
C1	1-163-078-11	CERAMIC CHIP	0.033MF	10%	25V
C2	1-126-177-11	ELECTRO	100MF	20%	6.3V
C3	1-163-078-11	CERAMIC CHIP	0.033MF	10%	25V
C4	1-163-059-00	CERAMIC CHIP	0.01MF	10%	50V
C5	1-126-177-11	ELECTRO	100MF	20%	6.3V
C6	1-126-154-11	ELECTRO	47MF	20%	6.3V
C7	1-124-442-00	ELECTRO	330MF	20%	6.3V
C8	1-163-062-00	CERAMIC CHIP	0.018MF	10%	50V
C9	1-126-177-11	ELECTRO	100MF	20%	6.3V
C10	1-124-465-00	ELECTRO	0.47MF	20%	50V
C11	1-163-059-00	CERAMIC CHIP	0.01MF	10%	50V
C12	1-163-062-00	CERAMIC CHIP	0.018MF	10%	50V
C13	1-164-161-11	CERAMIC CHIP	0.0022MF	10%	50V
C14	1-163-077-00	CERAMIC CHIP	0.1MF	10%	25V
C15	1-163-077-00	CERAMIC CHIP	0.1MF	10%	25V
C16	1-124-442-00	ELECTRO	330MF	20%	6.3V
C17	1-124-442-00	ELECTRO	330MF	20%	6.3V
C18	1-163-117-00	CERAMIC CHIP	100PF	5%	50V
C19	1-126-162-11	ELECTRO	3.3MF	20%	35V
C20	1-163-077-00	CERAMIC CHIP	0.1MF	10%	25V
C21	1-163-077-00	CERAMIC CHIP	0.1MF	10%	25V
C22	1-163-105-00	CERAMIC CHIP	33PF	5%	50V
C23	1-163-077-00	CERAMIC CHIP	0.1MF	10%	25V
C24	1-163-809-11	CERAMIC CHIP	0.047MF	10%	25V
C25	1-124-257-00	ELECTRO	2.2MF	20%	50V
C26	1-163-076-00	CERAMIC CHIP	0.068MF		50V
C27	1-126-177-11	ELECTRO	100MF	20%	6.3V
C28	1-126-177-11	ELECTRO	100MF	20%	6.3V
C29	1-127-558-11	ELECTRO (SOLID)	10MF	20%	6.3V
C30	1-163-037-00	CERAMIC CHIP	0.022MF	10%	50V
C31	1-163-017-00	CERAMIC CHIP	0.0047 MF	10%	50V
C32	1-163-078-11	CERAMIC CHIP	0.033MF	10%	25V
C33	1-124-465-00	ELECTRO	0.47MF	20%	50V
C34	1-126-154-11	ELECTRO	47MF	20%	6.3V
C35	1-163-141-00	CERAMIC CHIP	0.001MF	5%	50V
C36	1-124-442-00	ELECTRO	330MF	20%	6.3V
C37	1-126-160-11	ELECTRO	1 MF	20%	50V
C38	1-126-160-11	ELECTRO	1MF	20%	50V
C39	1-127-558-11	ELECTRO (SOLID)	10MF	20%	6.3V
C40	1-163-105-00	CERAMIC CHIP	33PF	5%	50V
C41	1-163-105-00	CERAMIC CHIP	33PF	5%	50V
C44	1-163-077-00	CERAMIC CHIP	0.1MF	10%	25V
C47	1-163-141-00	CERAMIC CHIP	0.001MF	5%	50V
C48	1-124-442-00	ELECTRO	330MF	20%	6.3V
C49	1-124-442-00	ELECTRO	330MF	20%	6.3V
C50	1-127-558-11	ELECTRO (SOLID)	10MF	20%	6.3V
C51	1-124-987-11	ELECTRO	3300MF	20%	6.3V
C52	1-124-987-11	ELECTRO	3300MF	20%	6.3V
C53	1-124-442-00	ELECTRO	330MF	20%	6.3V
C55	1-163-097-00	CERAMIC CHIP	15PF	5%	50V
C56	1-163-117-00	CERAMIC CHIP	100PF	5%	50V
C58	1-126-160-11	ELECTRO	1MF	20%	50V
C59	1-163-117-00	CERAMIC CHIP	100PF	5%	50V
C60	1-163-021-00	CERAMIC CHIP	0.01MF	10%	50V
C100	1-163-101-00	CERAMIC CHIP	22PF	5%	50V
C101	1-163-038-00	CERAMIC CHIP	0.1MF		25V
C102	1-163-137-00	CERAMIC CHIP	680PF	5%	50V
C103	1-163-139-00	CERAMIC CHIP	820PF	5%	50V
C104	1-163-113-00	CERAMIC CHIP	68PF	5%	50V
C105	1-163-063-00	CERAMIC CHIP	0.022MF	10%	50V
C106	1-124-638-11	ELECTRO	22MF	20%	6.3V
C107	1-163-191-00	CERAMIC CHIP	270PF	5%	50V
C150	1-124-638-11	ELECTRO	22MF	20%	6.3V
C200	1-163-101-00	CERAMIC CHIP	22PF		25V

REF. NO.	PART NO.	DESCRIPTION			
C201	1-163-038-00	CERAMIC CHIP	0.1MF		25V
C202	1-163-137-00	CERAMIC CHIP	680PF	5%	50V
C203	1-163-139-00	CERAMIC CHIP	820PF	5%	50V
C204	1-163-113-00	CERAMIC CHIP	68PF	5%	50V
C205	1-163-063-00	CERAMIC CHIP	0.022MF	10%	50V
C206	1-124-638-11	ELECTRO	22MF	20%	6.3V
C207	1-163-191-00	CERAMIC CHIP	270PF	5%	50V
C250	1-124-638-11	ELECTRO	22MF	20%	6.3V
C301	1-124-442-00	ELECTRO	330MF	20%	6.3V
C302	1-124-463-00	ELECTRO	0.1MF	20%	50V
C303	1-124-463-00	ELECTRO	0.1MF	20%	50V
C304	1-124-463-00	ELECTRO	0.1MF	20%	50V
C305	1-124-463-00	ELECTRO	0.1MF	20%	50V
C306	1-101-005-00	CERAMIC	0.022MF		25V
C307	1-124-464-11	ELECTRO	0.22MF	20%	50V
C308	1-124-464-11	ELECTRO	0.22MF	20%	50V
C501	1-136-165-00	FILM	0.1MF	5%	50V
C502	1-136-165-00	FILM	0.1MF	5%	50V
C503	1-124-455-00	ELECTRO	100MF	20%	16V
C505	1-163-055-00	CERAMIC CHIP	0.0047MF	10%	50V
C506	1-126-157-11	ELECTRO	10MF	20%	6.3V
C507	1-124-225-00	ELECTRO	100MF	20%	6.3V
C508	1-163-063-00	CERAMIC CHIP	0.022MF	10%	50V
C511	1-126-160-11	ELECTRO	1MF	20%	50V
C512	1-124-465-00	ELECTRO	0.47MF	20%	50V
C513	1-136-165-00	FILM	0.1MF	5%	50V
C542	1-124-455-00	ELECTRO	100MF	20%	16V
C543	1-136-165-00	FILM	0.1MF	5%	50V
C546	1-127-489-00	ELECTRO (SOLID)	10MF	20%	6.3V
C547	1-125-486-11	CAP, DOUBLE LAYERS	0.22F		5.5V
C548	1-136-165-00	FILM	0.1MF	5%	50V
C549	1-124-229-00	ELECTRO	33MF	20%	6.3V
C551	1-163-077-00	CERAMIC CHIP	0.1MF		50V
C552	1-136-165-00	FILM	0.1MF	5%	50V
C701	1-136-165-00	FILM	0.1MF	5%	50V
C703	1-126-160-11	ELECTRO	1MF	20%	50V
C705	1-163-063-00	CERAMIC CHIP	0.022MF	10%	50V
C706	1-126-247-11	ELECTRO	560MF	20%	6.3V
C707	1-126-247-11	ELECTRO	560MF	20%	6.3V
C710	1-124-119-11	ELECTRO	330MF	20%	16V
C718	1-126-157-11	ELECTRO	10MF	20%	6.3V
C719	1-124-229-00	ELECTRO	33MF	20%	6.3V
C720	1-124-755-11	ELECTRO	3300MF	20%	16V
C721	1-163-063-00	CERAMIC CHIP	0.022MF	10%	50V
CN301	1-506-914-11	PIN, CONNECTOR 2P			
CNJ1	*1-566-776-11	SOCKET, CONNECTOR 12P			
CNJ2	*1-568-509-11	HOUSING, CONNECTOR 11P			
CNJ4	*1-566-887-11	SOCKET, CONNECTOR 18P			
CNJ401	*1-566-887-11	SOCKET, CONNECTOR 18P			
CNJ402	*1-566-888-11	SOCKET, CONNECTOR 10P			
CNJ501	1-566-907-11	PIN, CONNECTOR 18P			
CNJ502	*1-566-887-11	SOCKET, CONNECTOR 18P			
CNJ503	*1-566-887-11	SOCKET, CONNECTOR 18P			
CNJ504	*1-563-912-11	SOCKET, CONNECTOR 4P			
CNP201	*1-566-001-11	PIN, CONNECTOR (PC BOARD) 4P			
CNP401	*1-506-984-11	PIN, CONNECTOR (PC BOARD) 2P			
CNP402	*1-506-984-11	PIN, CONNECTOR (PC BOARD) 2P			
CNP403	*1-506-984-31	PIN, CONNECTOR (PC BOARD) 2P			
CNP404	*1-506-985-11	PIN, CONNECTOR (PC BOARD) 3P			
CNP405	*1-506-985-11	PIN, CONNECTOR (PC BOARD) 3P			
CNP406	*1-506-988-11	PIN, CONNECTOR (PC BOARD) 6P			
CNP408	*1-564-012-11	PIN, CONNECTOR 2P			
CNP409	1-506-467-11	PIN, CONNECTOR 2P			

REF. NO.	PART NO.	DESCRIPTION			
CNP410	1-506-467-11	PIN, CONNECTOR 2P			
CNP411	*1-506-998-11	PIN, CONNECTOR (PC BOARD) 2P			
CNP412	*1-506-999-11	PIN, CONNECTOR (PC BOARD) 3P			
D1	8-719-100-03	DIODE 1S2835			
D301	8-719-100-03	DIODE 1S2835			
D302	8-719-100-05	DIODE 1S2837			
D303	8-719-911-19	DIODE 1SS119			
D304	8-719-100-05	DIODE 1S2837			
D401	8-719-812-31	DIODE TLR123			
D402	8-719-812-31	DIODE TLR123			
D403	8-719-100-03	DIODE 1S2835			
D404	8-719-100-03	DIODE 1S2835			
D405	8-719-100-03	DIODE 1S2835			
D501	8-719-110-12	DIODE RD9.1ES-B1			
D502	8-719-109-93	DIODE RD6.2ES-B2			
D503	8-719-100-03	DIODE 1S2835			
D505	8-719-100-03	DIODE 1S2835			
D507	8-719-109-85	DIODE RD5.1ES-B2			
D508	8-719-911-19	DIODE 1SS119			
D509	8-719-110-35	DIODE RD13ES-B1			
D511	8-719-109-85	DIODE RD5.1ES-B2			
D512	8-719-109-85	DIODE RD5.1ES-B2			
D513	8-719-109-85	DIODE RD5.1ES-B2			
D514	8-719-109-85	DIODE RD5.1ES-B2			
D515	8-719-109-85	DIODE RD5.1ES-B2			
D516	8-719-109-85	DIODE RD5.1ES-B2			
D518	8-719-911-19	DIODE 1SS119			
D703	8-719-801-67	DIODE DLS1585			
D704	8-719-910-62	DIODE HZ6A2L			
D705	8-719-109-93	DIODE RD6.2ES-B2			
D706	8-719-109-85	DIODE RD5.1ES-B2			
D707	8-719-110-48	DIODE RD18ES-B1			
D708	8-719-801-67	DIODE DLS1585			
D709	8-719-109-85	DIODE RD5.1ES-B2			
D710	8-719-801-67	DIODE DLS1585			
DD1	1-464-848-11	CONVERTER UNIT, DC-DC			
IC1	8-752-033-14	IC CXA1081Q			
IC2	8-752-032-32	IC CXA1182Q-Z			
IC3	8-752-328-62	IC CXD1125Q			
IC4	8-759-981-37	IC MB88505H-1023M			
IC5	8-759-821-58	IC LA-6530			
IC6	8-752-323-65	IC CXK5816M-15L			
IC7	8-759-946-27	IC CXD1316DM			
IC301	8-759-805-33	IC CXD1161M-2			
IC302	8-759-100-96	IC UPC4558G2			
IC303	8-759-802-48	IC LA6462M			
IC304	8-759-745-64	IC NJM4560M			
IC501	8-759-802-32	IC LB1649			
IC502	8-759-940-47	IC S-8054HN-CB-S			
IC503	8-757-991-00	IC CX-7991			
IC505	8-759-112-05	IC UPD7508HG-593-22			
IC507	8-759-802-32	IC LB1649			
JR1	1-216-295-00	METAL GLAZE	0 OHM	5%	1/10W
JR2	1-216-296-00	METAL GLAZE	0 OHM	5%	1/8W
JR550	1-216-296-00	METAL GLAZE	0 OHM	5%	1/8W
JR551	1-216-296-00	METAL GLAZE	0 OHM	5%	1/8W
JR552	1-216-296-00	METAL GLAZE	0 OHM	5%	1/8W
L1	1-410-501-11	INDUCTOR	2.2UH		
L3	1-410-501-11	INDUCTOR	2.2UH		
L4	1-410-316-11	INDUCTOR	1UH		
L7	1-410-196-11	INDUCTOR CHIP	2.2UH		
L8	1-410-196-11	INDUCTOR CHIP	2.2UH		
L10	1-410-501-11	INDUCTOR	2.2UH		

REF. NO.	PART NO.	DESCRIPTION			
L11	1-410-196-11	INDUCTOR CHIP	2.2UH		
L101	1-410-196-11	INDUCTOR CHIP	2.2UH		
L201	1-410-196-11	INDUCTOR CHIP	2.2UH		
L301	1-410-196-11	INDUCTOR CHIP	2.2UH		
L501	1-410-501-11	INDUCTOR	2.2UH		
L504	1-410-501-11	INDUCTOR	2.2UH		
L505	1-410-501-11	INDUCTOR	2.2UH		
L506	1-410-501-11	INDUCTOR	2.2UH		
L507	1-410-501-11	INDUCTOR	2.2UH		
M1	X-3329-571-1	MOTOR ASSY, M1			
M2	X-3329-560-2	MOTOR ASSY, M2			
M3	1-541-309-11	MOTOR, L (RF-370C)			
M902	A-4910-100-B	GEAR ASSY, SLED MOTOR			
Q1	8-729-804-42	TRANSISTOR 2SB1122-T			
Q2	8-729-106-60	TRANSISTOR 2SB1115A			
Q3	8-729-808-02	TRANSISTOR 2SD1622-R-TC			
Q4	8-729-106-60	TRANSISTOR 2SB1115A			
Q5	8-729-808-02	TRANSISTOR 2SD1622-R-TC			
Q6	8-729-901-00	TRANSISTOR DTC124EK			
Q8	8-729-271-22	TRANSISTOR 2SC2712G			
Q9	8-729-900-53	TRANSISTOR DTC114EK			
Q10	8-729-901-01	TRANSISTOR DTC144EK			
Q101	8-729-202-38	TRANSISTOR 2SC3326N			
Q201	8-729-202-38	TRANSISTOR 2SC3326N			
Q301	8-729-901-05	TRANSISTOR DTA124EK			
Q302	8-729-901-00	TRANSISTOR DTC124EK			
Q303	8-729-805-67	TRANSISTOR 2SA1342			
Q304	8-729-901-00	TRANSISTOR DTC124EK			
Q305	8-729-901-00	TRANSISTOR DTC124EK			
Q401	8-729-110-21	TRANSISTOR PH102-L			
Q402	8-729-110-21	TRANSISTOR PH102-L			
Q403	8-719-906-43	DIODE GP-1S03			
Q502	8-729-216-22	TRANSISTOR 2SA1162			
Q505	8-729-216-22	TRANSISTOR 2SA1162			
Q506	8-729-216-21	TRANSISTOR 2SA1162Y			
Q511	8-729-805-67	TRANSISTOR 2SA1342			
Q512	8-729-901-00	TRANSISTOR DTC124EK			
Q513	8-729-805-67	TRANSISTOR 2SA1342			
Q514	8-729-271-23	TRANSISTOR 2SC2712Y			
Q515	8-729-805-67	TRANSISTOR 2SA1342			
Q516	8-729-271-23	TRANSISTOR 2SC2712Y			
Q517	8-729-805-67	TRANSISTOR 2SA1342			
Q518	8-729-901-00	TRANSISTOR DTC124EK			
Q519	8-729-901-00	TRANSISTOR DTC124EK			
Q520	8-729-805-67	TRANSISTOR 2SA1342			
Q523	8-729-271-22	TRANSISTOR 2SC2712G			
Q524	8-729-805-67	TRANSISTOR 2SA1342			
Q704	8-729-901-00	TRANSISTOR DTC124EK			
Q705	8-729-804-42	TRANSISTOR 2SB1122-T			
Q706	8-729-271-22	TRANSISTOR 2SC2712G			
Q707	8-729-808-02	TRANSISTOR 2SD1622			
Q710	8-729-900-53	TRANSISTOR DTC114EK			
R1	1-216-081-00	METAL GLAZE	22K OHM	5%	1/10W
R2	1-216-073-00	METAL GLAZE	10K OHM	5%	1/10W
R3	1-216-151-00	METAL GLAZE	11 OHM	5%	1/8W
R4	1-216-151-00	METAL GLAZE	11 OHM	5%	1/8W
R5	1-216-049-00	METAL GLAZE	1K OHM	5%	1/10W
R6	1-216-057-00	METAL GLAZE	2.2K OHM	5%	1/10W
R7	1-216-076-00	METAL GLAZE	13K OHM	5%	1/10W
R8	1-216-097-00	METAL GLAZE	100K OHM	5%	1/10W
R9	1-216-074-00	METAL GLAZE	11K OHM	5%	1/10W
R10	1-216-113-00	METAL GLAZE	470K OHM	5%	1/10W
R11	1-216-097-00	METAL GLAZE	100K OHM	5%	1/10W

REF. NO.	PART NO.	DESCRIPTION			
R12	1-216-097-00	METAL GLAZE	100K OHM	5%	1/10W
R13	1-216-097-00	METAL GLAZE	100K OHM	5%	1/10W
R14	1-216-109-00	METAL GLAZE	330K OHM	5%	1/10W
R15	1-216-093-00	METAL GLAZE	68K OHM	5%	1/10W
R16	1-216-099-00	METAL GLAZE	120K OHM	5%	1/10W
R17	1-216-117-00	METAL GLAZE	680K OHM	5%	1/10W
R18	1-216-071-00	METAL GLAZE	8.2K OHM	5%	1/10W
R19	1-216-107-00	METAL GLAZE	270K OHM	5%	1/10W
R20	1-216-097-00	METAL GLAZE	100K OHM	5%	1/10W
R21	1-216-061-00	METAL GLAZE	3.3K OHM	5%	1/10W
R22	1-216-073-00	METAL GLAZE	10K OHM	5%	1/10W
R23	1-216-097-00	METAL GLAZE	100K OHM	5%	1/10W
R24	1-216-080-00	METAL GLAZE	20K OHM	5%	1/10W
R25	1-216-121-00	METAL GLAZE	1M OHM	5%	1/10W
R27	1-216-073-00	METAL GLAZE	10K OHM	5%	1/10W
R28	1-216-222-00	METAL GLAZE	10K OHM	5%	1/8W
R29	1-216-097-00	METAL GLAZE	100K OHM	5%	1/10W
R40	1-216-024-00	METAL GLAZE	91 OHM	5%	1/10W
R41	1-216-049-00	METAL GLAZE	1K OHM	5%	1/10W
R42	1-216-081-00	METAL GLAZE	22K OHM	5%	1/10W
R43	1-216-049-00	METAL GLAZE	1K OHM	5%	1/10W
R44	1-216-230-00	METAL GLAZE	22K OHM	5%	1/8W
R45	1-216-001-00	METAL GLAZE	10 OHM	5%	1/10W
R50	1-216-073-00	METAL GLAZE	10K OHM	5%	1/10W
R51	1-214-804-11	METAL 3.3 OHM	3.3 OHM	1%	1/2W
R52	1-216-077-00	METAL GLAZE	15K OHM	5%	1/10W
R53	1-216-138-00	METAL GLAZE	3.3 OHM	5%	1/8W
R55	1-216-049-00	METAL GLAZE	1K OHM	5%	1/10W
R56	1-216-049-00	METAL GLAZE	1K OHM	5%	1/10W
R58	1-216-073-00	METAL GLAZE	10K OHM	5%	1/10W
R100	1-216-651-11	METAL CHIP	1K OHM	0.50%	1/10W
R101	1-216-288-11	METAL GLAZE	5.6M OHM	0.50%	1/8W
R102	1-216-680-11	METAL CHIP	16K OHM	5%	1/10W
R103	1-216-683-11	METAL CHIP	22K OHM	0.50%	1/10W
R104	1-216-691-11	METAL CHIP	47K OHM	0.50%	1/10W
R105	1-216-679-11	METAL CHIP	15K OHM	0.50%	1/10W
R106	1-216-657-11	METAL CHIP	1.8K OHM	0.50%	1/10W
R107	1-216-001-00	METAL GLAZE	10 OHM	5%	1/10W
R108	1-216-643-11	METAL CHIP	470 OHM	0.50%	1/10W
R109	1-216-113-00	METAL GLAZE	470K OHM	5%	1/10W
R110	1-216-065-00	METAL GLAZE	4.7K OHM	5%	1/10W
R112	1-216-073-00	METAL GLAZE	10K OHM	5%	1/10W
R113	1-216-677-11	METAL CHIP	12K OHM	0.50%	1/10W
R114	1-216-675-11	METAL CHIP	10K OHM	0.50%	1/10W
R115	1-216-627-11	METAL CHIP	100 OHM	0.50%	1/10W
R200	1-216-651-11	METAL CHIP	1K OHM	0.50%	1/10W
R201	1-216-288-11	METAL GLAZE	5.6M OHM	5%	1/8W
R202	1-216-680-11	METAL CHIP	16K OHM	0.50%	1/10W
R203	1-216-683-11	METAL CHIP	22K OHM	0.50%	1/10W
R204	1-216-691-11	METAL CHIP	47K OHM	0.50%	1/10W
R205	1-216-679-11	METAL CHIP	15K OHM	0.50%	1/10W
R206	1-216-657-11	METAL CHIP	1.8K OHM	0.50%	1/10W
R207	1-216-150-00	METAL GLAZE	10 OHM	5%	1/8W
R208	1-216-643-11	METAL CHIP	470 OHM	0.50%	1/10W
R209	1-216-113-00	METAL GLAZE	470K OHM	5%	1/10W
R210	1-216-065-00	METAL GLAZE	4.7K OHM	5%	1/10W
R212	1-216-073-00	METAL GLAZE	10K OHM	5%	1/10W
R213	1-216-677-11	METAL CHIP	12K OHM	0.50%	1/10W
R214	1-216-675-11	METAL CHIP	10K OHM	0.50%	1/10W
R215	1-216-627-11	METAL CHIP	100 OHM	0.50%	1/10W
R301	1-216-039-00	METAL GLAZE	390 OHM	5%	1/10W
R304	1-216-097-00	METAL GLAZE	100K OHM	5%	1/10W
R305	1-216-198-00	METAL GLAZE	1K OHM	5%	1/8W

REF. NO.	PART NO.	DESCRIPTION			
R307	1-216-150-00	METAL GLAZE	10 OHM	5%	1/8W
R308	1-216-150-00	METAL GLAZE	10 OHM	5%	1/8W
R401	1-216-182-00	METAL GLAZE	220 OHM	5%	1/8W
R402	1-216-182-00	METAL GLAZE	220 OHM	5%	1/8W
R403	1-216-182-00	METAL GLAZE	220 OHM	5%	1/8W
R502	1-216-222-00	METAL GLAZE	10K OHM	5%	1/8W
R503	1-249-429-11	CARBON	10K OHM	5%	1/4W
R505	1-216-222-00	METAL GLAZE	10K OHM	5%	1/8W
R506	1-216-214-00	METAL GLAZE	4.7K OHM	5%	1/8W
R507	1-216-222-00	METAL GLAZE	10K OHM	5%	1/8W
R508	1-216-073-00	METAL GLAZE	10K OHM	5%	1/10W
R516	1-216-222-00	METAL GLAZE	10K OHM	5%	1/8W
R518	1-216-222-00	METAL GLAZE	10K OHM	5%	1/8W
R519	1-216-222-00	METAL GLAZE	10K OHM	5%	1/8W
R520	1-216-222-00	METAL GLAZE	10K OHM	5%	1/8W
R521	1-216-222-00	METAL GLAZE	10K OHM	5%	1/8W
R530	1-216-182-00	METAL GLAZE	220 OHM	5%	1/8W
R531	1-249-417-11	CARBON	1K OHM	5%	1/4W
R532	1-247-903-00	CARBON	1K OHM	5%	1/4W
R533	1-216-222-00	METAL GLAZE	10K OHM	5%	1/8W
R534	1-216-246-00	METAL GLAZE	100K OHM	5%	1/8W
R535	1-216-246-00	METAL GLAZE	100K OHM	5%	1/8W
R536	1-216-246-00	METAL GLAZE	100K OHM	5%	1/8W
R537	1-216-246-00	METAL GLAZE	100K OHM	5%	1/8W
R540	1-249-437-11	CARBON	47K OHM	5%	1/4W
R541	1-216-222-00	METAL GLAZE	10K OHM	5%	1/8W
R542	1-216-222-00	METAL GLAZE	10K OHM	5%	1/8W
R543	1-249-417-11	CARBON	1K OHM	5%	1/4W
R544	1-216-025-00	METAL GLAZE	100 OHM	5%	1/10W
R545	1-216-025-00	METAL GLAZE	100 OHM	5%	1/10W
R704	1-216-198-00	METAL GLAZE	1K OHM	5%	1/8W
R705	1-216-206-00	METAL GLAZE	2.2K OHM	5%	1/8W
R706	1-216-238-00	METAL GLAZE	47K OHM	5%	1/8W
R707	1-216-190-00	METAL GLAZE	470 OHM	5%	1/8W
R708	1-216-206-00	METAL GLAZE	2.2K OHM	5%	1/8W
R709	1-216-198-00	METAL GLAZE	1K OHM	5%	1/8W
R710	1-216-238-00	METAL GLAZE	47K OHM	5%	1/8W
R711	1-216-206-00	METAL GLAZE	2.2K OHM	5%	1/8W
R713	1-214-792-00	METAL	1 OHM	1%	1/2W
RV1	1-228-995-00	RES, ADJ, CARBON 22K OHM			
RV2	1-228-996-00	RES, ADJ, CARBON 47K OHM			
RV3	1-228-995-00	RES, ADJ, CARBON 22K OHM			
RV4	1-228-995-00	RES, ADJ, CARBON 22K OHM			
RV5	1-228-991-00	RES, ADJ, CARBON 2.2K OHM			
RY300	1-515-614-11	RELAY			
S902	1-554-938-11	SWITCH, LEAF			
SW101	1-554-813-41	SWITCH, KEY BOARD			
SW102	1-570-503-12	SWITCH, MICRO (CBP)			
SW103	1-570-502-11	SWITCH, MICRO (MI)			
SW104	1-570-504-11	SWITCH, MICRO (HOME)			
SW105	1-570-504-11	SWITCH, MICRO (LOT)			
SW106	1-570-504-11	SWITCH, MICRO (PST)			
SW107	1-570-504-11	SWITCH, MICRO (EJECT)			
TH1	1-807-766-11	THERMISTOR ERT-D2FHJ802T			
TH2	1-807-776-11	THERMISTOR ERT-D2FHJ802T			
THP501	1-807-368-11	THERMISTOR PTH59F04BG222TS			
X2	1-567-820-11	VIBRATOR, CRYSTAL 16 HMz			
X501	1-567-775-11	VIBRATOR, CERAMIC 4.19 MHz			

NO Go - NO ± 5V from DC-DC CONV. NO trigger in!

check DPT PCB location and LED for ILLUMINATION!

(SITS RIGHT FRONT of ROLLERS)