Briton "Buccaneer" A.C. Dual-Wave Mantel Model 1

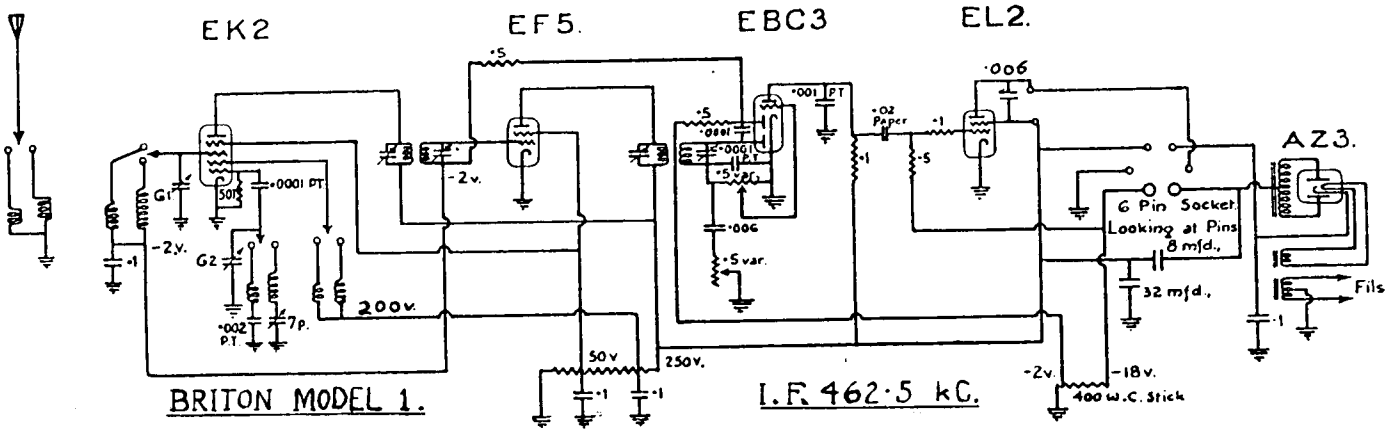

Briton Valving Changes

In some early serial numbers of Models 1, 2, 3, and 4, the AZ3 rectifier will be found. This has a four volt heater, but is otherwise similar to EZ3 in characteristics. A few serial numbers have type 1561, the directly heated 4 volt rectifier.

Early serial numbers of Model 5 were equipped with 1C4 R.F. and I.F. amplifiers instead of KF3. With these receivers the screen grid voltage should be 67½ v. and a green lead is provided in the battery cable for this purpose, with 67½ v. tag attached. A few of the later Model 5's although equipped with KF3 (135 v. on screen grid) are also equipped with the green battery lead, but in this case it is tagged 135 volts.

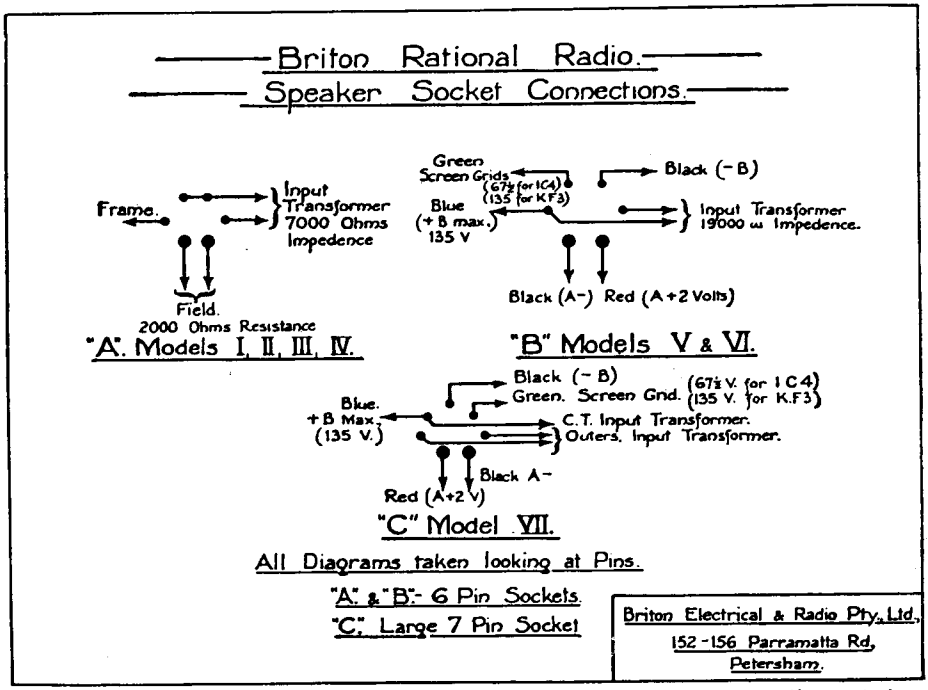

Above are shown the loudspeaker and loudspeaker-battery plug connections used with "Briton" models 1 to 7A, inclusive. Since the above block was made, Briton's address has been changed to 369 Kent Street, Sydney.