Car radio cassette player 02AC759A

Service
Service
Service

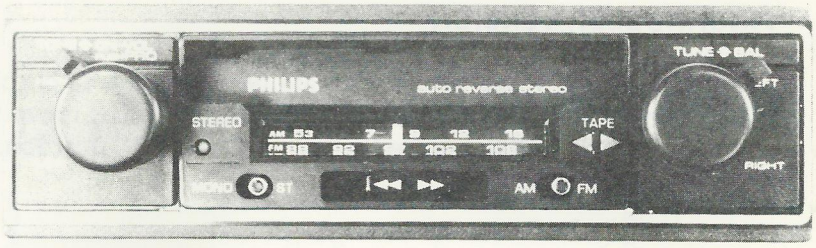

Service Manual

Four Track Auto Reverse Stereo Cassette Player
with AM Car Radio.

12 V

SPECIFICATIONS

TUNING RANGE	515 to 1620 kHz.
INTERMEDIATE FREQUENCY	455 kHz.
NUMBER OF TRACKS	4 Tracks. 2 Channels.
TAPE CARTRIDGE	Stereo Monaural Compact Cassette.
POWER OUTPUT	3.5 watts.
SPEAKER IMPEDANCE	4 ohms per Channel.
POWER SUPPLY	12 volts Negative to Earth.
CURRENT	1.4 amps. approx. (at maximum output).
SEMICONDUCTORS	7 IC's 1 Transistor 7 Diodes.

Subject to modification

4802 725 17055

PHILIPS

CAUTION: Due to the control mechanism in this model, the EJECT button should be slightly pushed when releasing FF or REW.
Do not slide the button by force as this may damage the player.

PINCHROLLER TENSION

Referring to Fig. 1, use an appropriate tension gauge to check the pinchroller tension which should be 300 to 400 g. If the reading is more than 400 g move the spring to the "A" position. If the reading is less than 300 g move the spring to the "B" position.

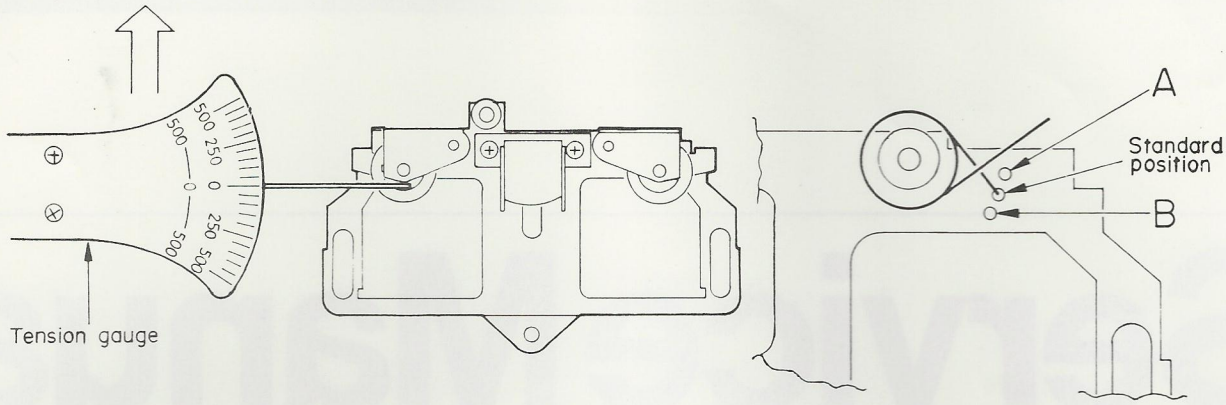

Fig. 1

DIAL CORD STRINGING

1. Turn the tuner shaft fully clockwise.
2. Using a 500mm length of dial cord tie a loop in one end and hook this loop over the lug as shown in "B" Fig. 2.
3. Take the cord in the direction of the arrow around the 3 pulleys and wind it around the tuning shaft as shown in "C" Fig. 2.
4. Take the cord back around 4 pulleys – release the looped end from the lug and tie the free end to the loop, as shown in "D" Fig. 2.
5. Turn the tuner shaft fully anti-clockwise and fit the pointer to the cord in the position as shown in "E" Fig. 2.
6. Seal the dial cord knot and the pointer with a suitable adhesive.

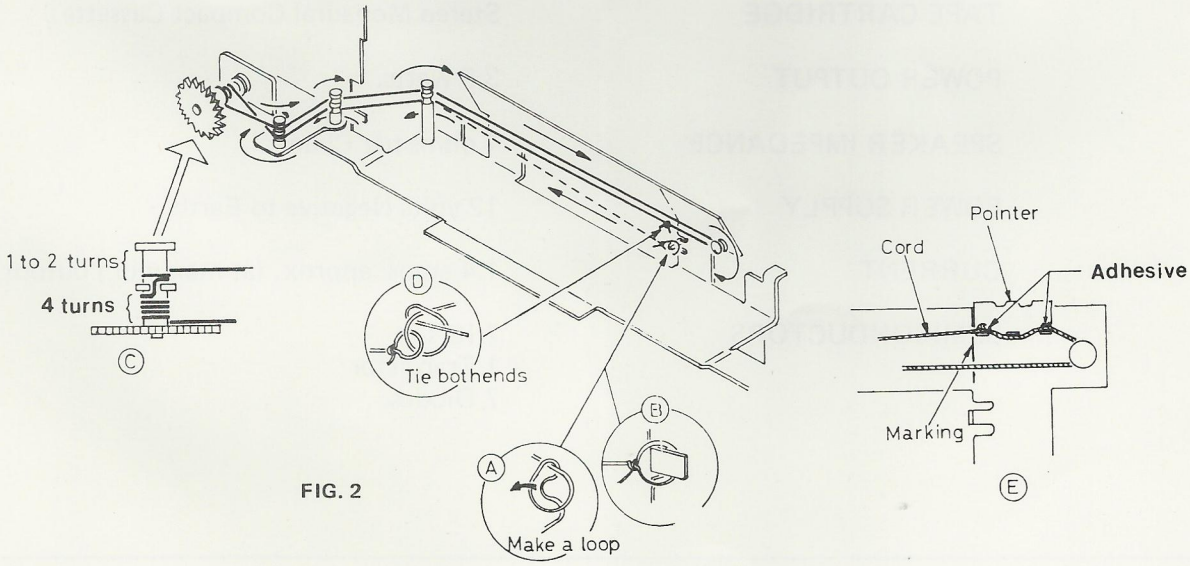

FIG. 2

AM ALIGNMENT

〔1〕 IF Alignment

(1) Preparations for alignment

a. Connections

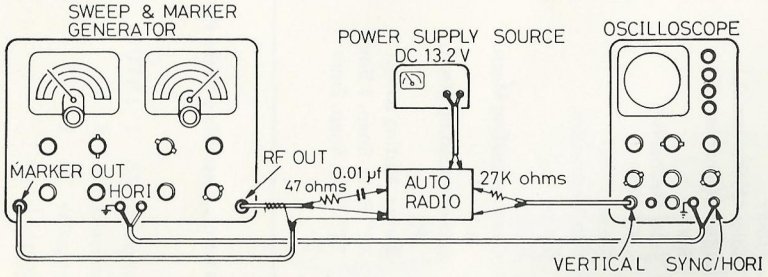

Fig. 3

SWEEP GENERATOR OUTPUT	OSCILLOSCOPE VERTICAL INPUT	OSCILLOSCOPE HORIZONTAL INPUT
Connect TP 1 in Fig. 5 through 0.01 μF capacitor & 47 ohms	Connect TP 2 in Fig. 5 through 27k-ohm resistor	Connect with HORIZONTAL terminal of sweep generator

b. Power supply : 13.2 VDC

c. Controls : Volume for minimum
Tone for high

(2) Alignments (Refer to Fig. 5 for ADJUSTMENT POINTS.)

STEP	PURPOSE	SWEEP GENERATOR FREQUENCY	SET TUNER TO	ADJUSTMENT POINTS	PROCEDURE
1	IF	455 kHz	Near 1,000 kHz no signal exists	T 2 to T 5	Get maximum IF curve and best symmetry on both sides.
2	Repeat STEP 1 until no further gain in output can be obtained.				

〔2〕 Tracking Alignment

(1) Preparations for alignment

a. Connections

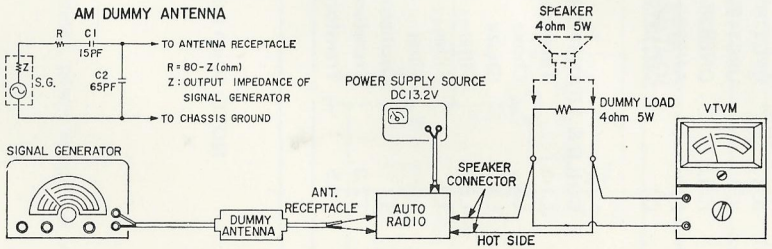

Fig. 4

b. Power supply : 13.2 VDC

c. Controls : Volume for maximum
Tone for high

(2) Alignment (Refer to Fig. 5 for ADJUSTMENT POINTS.)

STEP	PURPOSE	GENERATOR FREQUENCY	SET TUNER TO	ADJUSTMENT POINTS	PROCEDURE
1	Tuning range	1,650 kHz (400 Hz, 30%, AM modulated)	High-end stop	CV 3	Adjust for maximum meter indication.
2		510 kHz (400 Hz, 30%, AM modulated)	Low-end stop	T 1	
3	Repeat STEP 1 and 2 until no further gain in output can be obtained.				
4	Tracking	1,400 kHz (400 Hz, 30%, AM modulated)	Just tune in SG frequency	CV 1	Adjust for maximum meter indication.
5				CV 2	

NOTE: Always readjust antenna trimmer CV 1 when radio or antenna is reinstalled, tuning in a weak station around 1,400 kHz and get maximum volume.

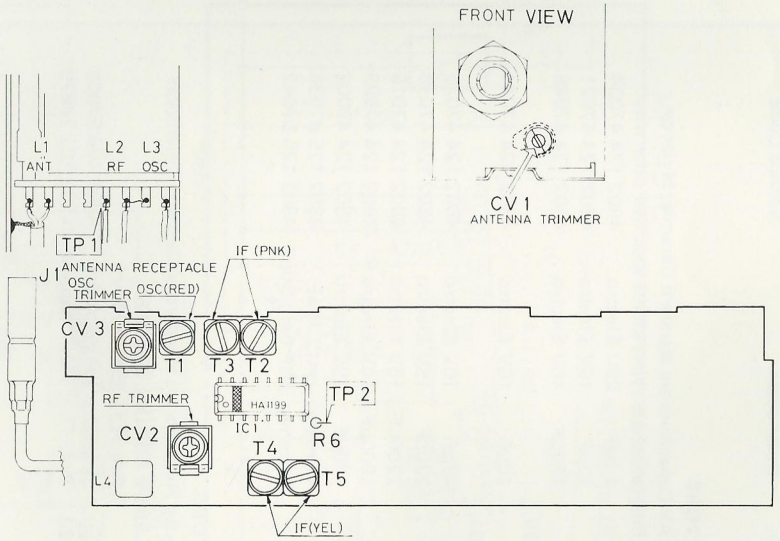

Fig. 5 (ADJUSTMENT POINTS)

REPLACEMENT PARTS

Ref. No.	Description	Service Code
CAPACITORS		
NOTE: All Capacitors are standard Ceramic, Mylar or Polycarbonate types unless specified otherwise.		
C4	4.7μF 25V Electro	4802 124 47034
C15	22μF 16V Electro	4802 124 47021
C16,55	100μF 16V Electro	4802 124 47049
C23,24,29, 30,51	10μF 16V Electro	4802 124 47044
C25,26,31, 38,39	47μF 16V Electro	4802 124 47025
C36,37	220μF 16V Electro	4802 124 47018
C40	2200μF 16V Electro	4802 124 47019
C41,42	1000μF 10V Electro	4802 124 47003
C52	100μF 10V Electro	4802 124 47002
CV1	Trimmer (ant.) 70pF	4802 125 67038
CV2,3	Trimmer (RF osc.) 50pF	4802 125 57042
RESISTORS		
NOTE: All Resistors are standard Values and Tolerances unless specified otherwise.		
RV1	Pot. Balance (incl. tuning shaft)	4802 100 97003
RV2-5. S1	Pot. Tone. Volume	4802 102 27079
SEMICONDUCTORS		
D1	GL31AR (LED. Power)	4802 130 37188
D2,3	LN312GP (LED. Tape direction)	4802 130 37189
D4,5	1S1555	4802 130 37033
D6,7	1S1885	4802 130 37123
IC1	HA1199	4802 209 87122
IC2	M51521L	4802 209 87107
IC3	UPC1181HP EFE	4802 209 87181
IC4	UPC1182HP EFE	4802 209 87182
IC5,6	DN6838	4802 209 87209
IC7	AN6250	4802 209 87185
Q1	2SC1317QR	4802 130 47338
COILS & TRANSFORMERS		
L1-3	Tuner assembly	4802 210 17114
L4	Choke 6.2μH	4802 157 57046
L5	Choke 4.7μH	4802 158 17104
L6	Filter 50μH	4802 158 17042
L7	Filter 2.7mH	4802 152 27028
L8	Filter 0.74μH	4802 158 17077
T1	Oscillator (red)	4802 156 27097
T2,3	Transformer. IF (pink)	4802 153 17165
T4,5	Transformer. IF (yellow)	4802 153 17166

Ref. No.	Description	Service Code
MISCELLANEOUS ELECTRICAL		
A1	Head. Playback	4802 249 37013
E1	Solenoid	4802 281 57012
F1	Fuse	4802 253 47006
M1	Motor	4802 361 27046
J1	Receptacle. Antenna	4802 321 17026
J2	7 way Connector & Lead assy.	4802 266 47006
PL1	Lamp	4802 130 37215
RY1	Relay. (incl. S6)	4802 280 87005
S3-1.3-4	Switch. Slide	4802 277 67038
S5	Switch. Power	4822 271 30025
MISCELLANEOUS		
1	Knob (Vol. & tuning)	4802 413 47204
2	Knob (Tone & balance)	4802 411 27131
3	Button (Eject. FF. Rew.)	4802 410 27282
4	Trimplate	4802 459 57042
5	Escutcheon	4802 459 17386
8	Gear (Pointer)	4802 522 37049
9	Roller (Universal joint)	4802 528 97022
10	Roller (Universal joint)	4802 528 97023
CASSETTE DECK		
2	Spring. Plunger	4802 492 37384
5	Spring. Azimuth adjusting	4802 492 37385
8	Spring	4802 492 37386
10	Pinchroller assy. (L)	4802 403 47032
11	Pinchroller assy. (R)	4802 403 47034
12	Spring. Pinchroller (L)	4802 492 37387
13	Spring. Pinchroller (R)	4802 492 37388
17	Spring	4802 492 37389
23	Belt	4802 358 37051
24	Flywheel & Capstan	4802 528 67065
26	Pulley	4802 528 87088
27	Idler Mechanism (L)	4802 403 47039
28	Idler Mechanism (R)	4802 403 47041
29	Spring	4802 492 37391
31	Idler Mechanism (FF/RW)	4802 403 47044
33	Spring	4802 492 37392
34	Slip Mechanism	4802 528 17086
36	Spring	4802 492 37393
38	Spring	4802 492 37394
39	Cassette loading Mech. (L)	4802 403 57169
40	Cassette loading Mech. (R)	4802 403 57171
51	Spring. Muting switch	4802 492 37397
54	"E" Ring. Snap. 1.5mm	4822 530 70121
55	"E" Ring. Snap. 2mm	4822 530 70122

NOTE: When using substitute semiconductors check the base connections before assembling to the PW Board.

EXPLODED VIEW

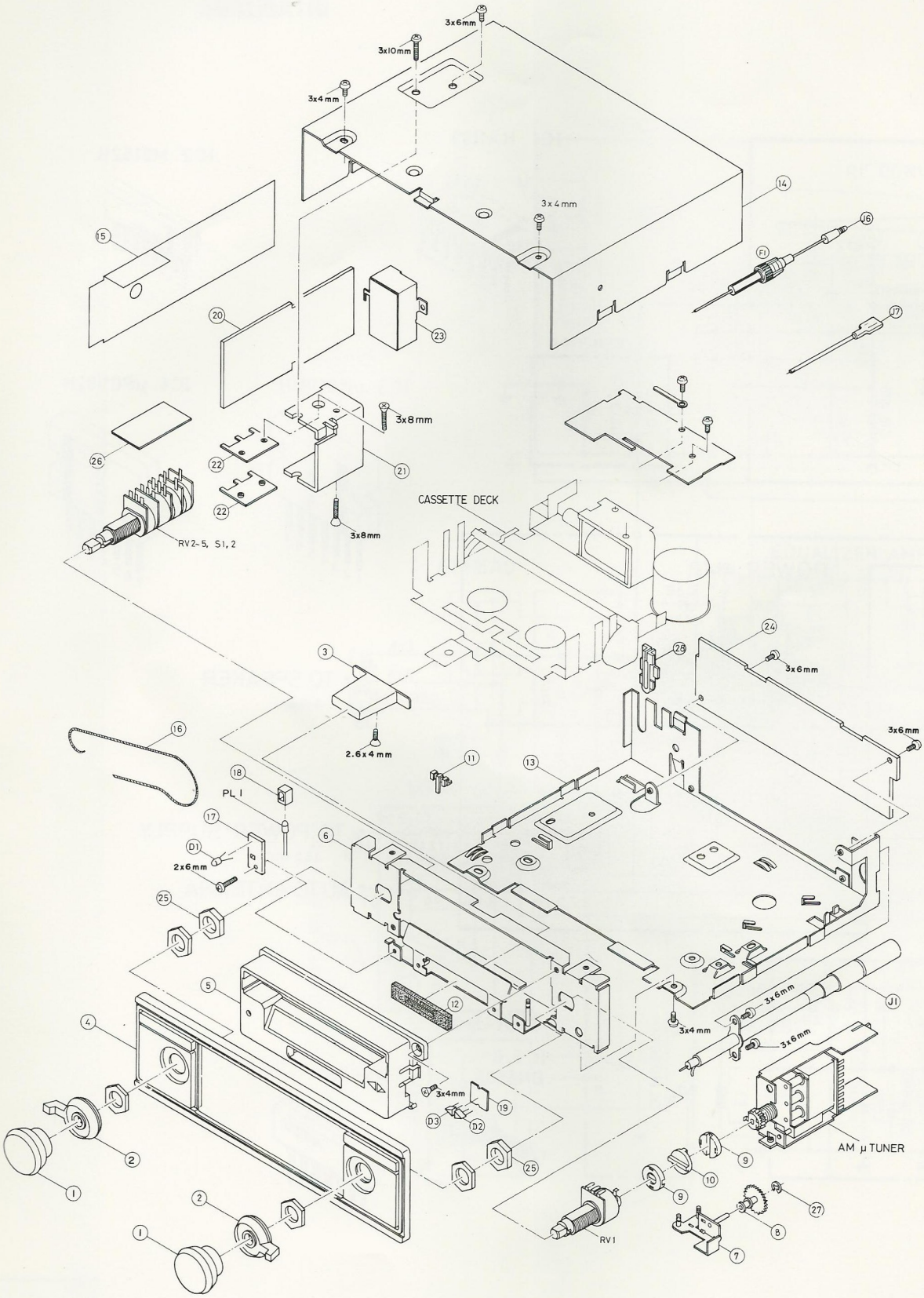

CASSETTE DECK

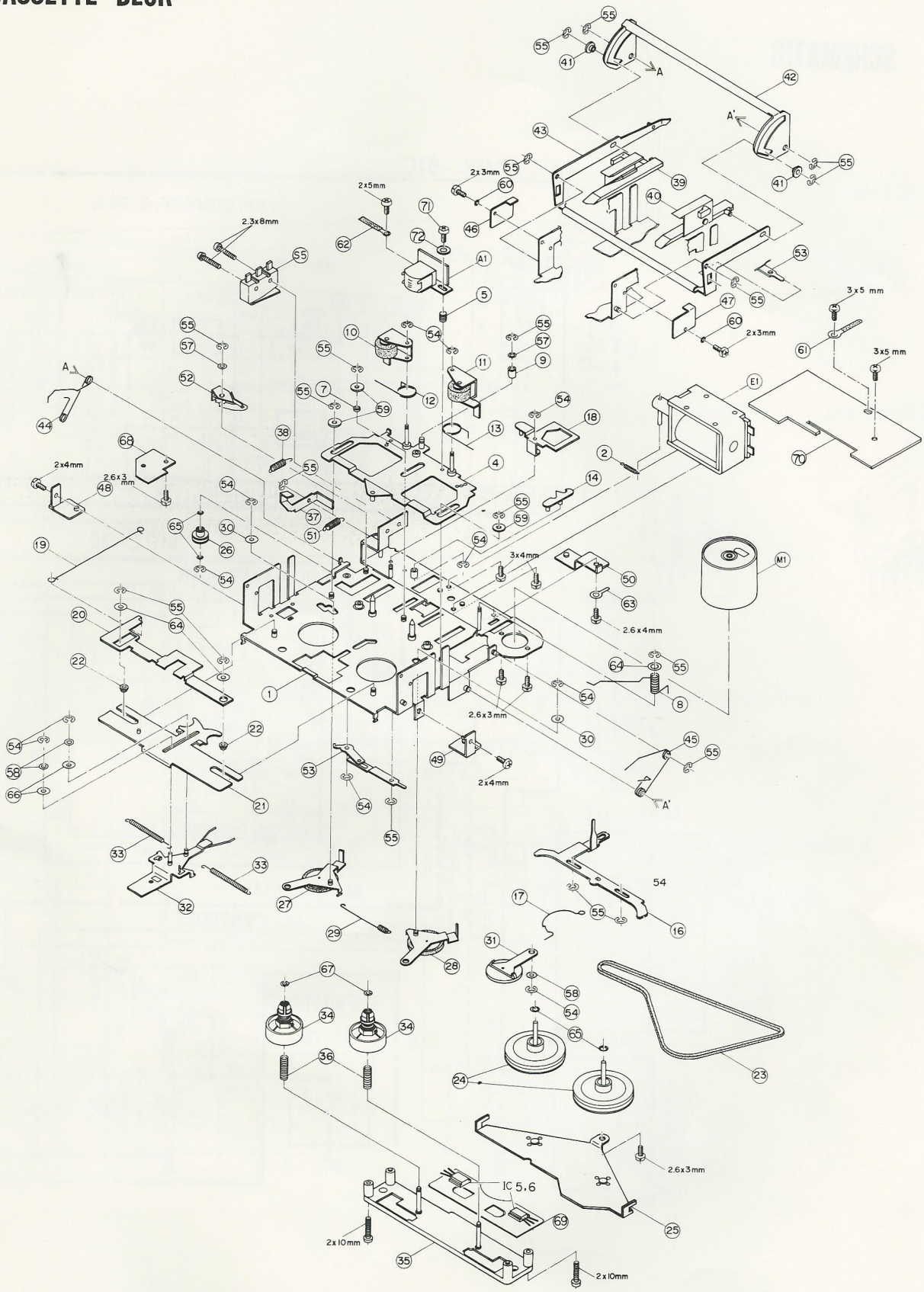

PLAYBACK HEAD ADJUSTMENT (Azimuth)

Normally, the adjustment is precisely set at the factory and further adjustment should not be required unless the playback head or its mounting components are replaced.

Incorrect adjustment will cause a reduction in performance.

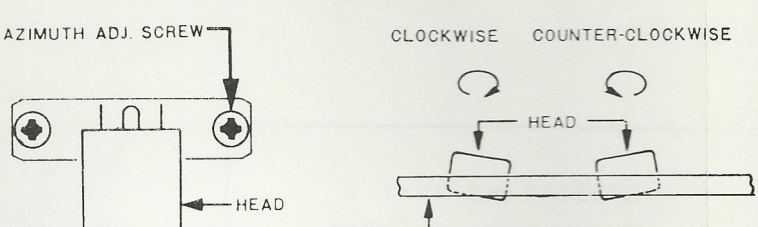

Fig. 14.

If the azimuth is moved, then carefully adjust the azimuth screw as shown in Fig. 14.

Using a Test Tape for Azimuth Adjustment

Insert a test tape and set the control knobs as follows:

VOL. CONTROL KNOB (VOL)	Normal Volume
BALANCE CONTROL KNOB (BAL)	Central
BASS CONTROL KNOB	Central
TREBLE CONTROL KNOB	Right Hand Side

Carefully adjust the azimuth adjustment screw for maximum volume and treble tones. It is recommended that a VTVM or Circuit Tester is connected to the speaker terminals for obtaining the maximum value because the test tape for azimuth adjustment is recorded in high treble tones.

If a test tape is not available, use a stereo music tape with some high treble tones (piano or violin music) and follow the same procedure as above.

CLEANING

After extended use, a layer of iron-oxide from the tape can build-up on the tape playback head and the drive capstan. The oxide layer prevents the tape from making full contact with the playback head, resulting in a gradual loss of high frequency response and an increased noise level. In the case of the capstan, the oxide deposit can cause slippage (wow) which might be mistaken for a more serious mechanical problem. To clean the head, a swab moistened with alcohol should be used.

WARNING – Do not use a solvent such as lighter fluid or thinners as these may cause damage to plastic parts or instrument finish.

First, using the end of a pencil, press the rod in the cassette door back until it clicks into position and then thoroughly clean the playback head, capstan and pinchroller.

After cleaning, press the eject button to return the rod to its original position.

DEMAGNETISATION

The playback head may become magnetised over a period of time. A magnetised head will record noise on a tape, even when it is being used for playback, so it is important that the head be periodically demagnetised. This can be done with a commercial demagnetiser (or degausser).

ADJUSTMENT FOR TAKE-UP TORQUE

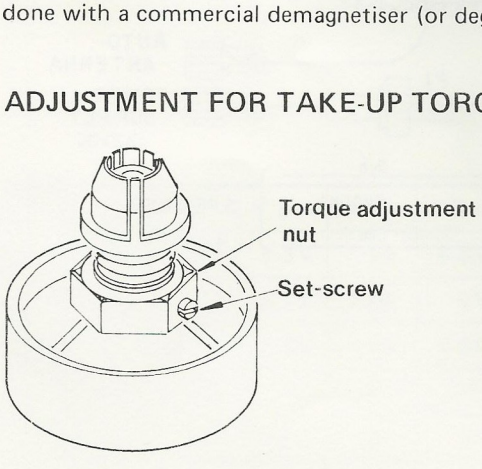

ADJUSTMENT FOR TAKE UP TORQUE

With the motor running, use an appropriate gauge to measure the take up torque. This should be between 45 and 55 g-cm. If adjustment is required, loosen the set screw in the torque adjustment nut (Fig. 15) and turn the nut clockwise to increase the torque or anti-clockwise to decrease it. Tighten the set screw.

SCHEMATIC

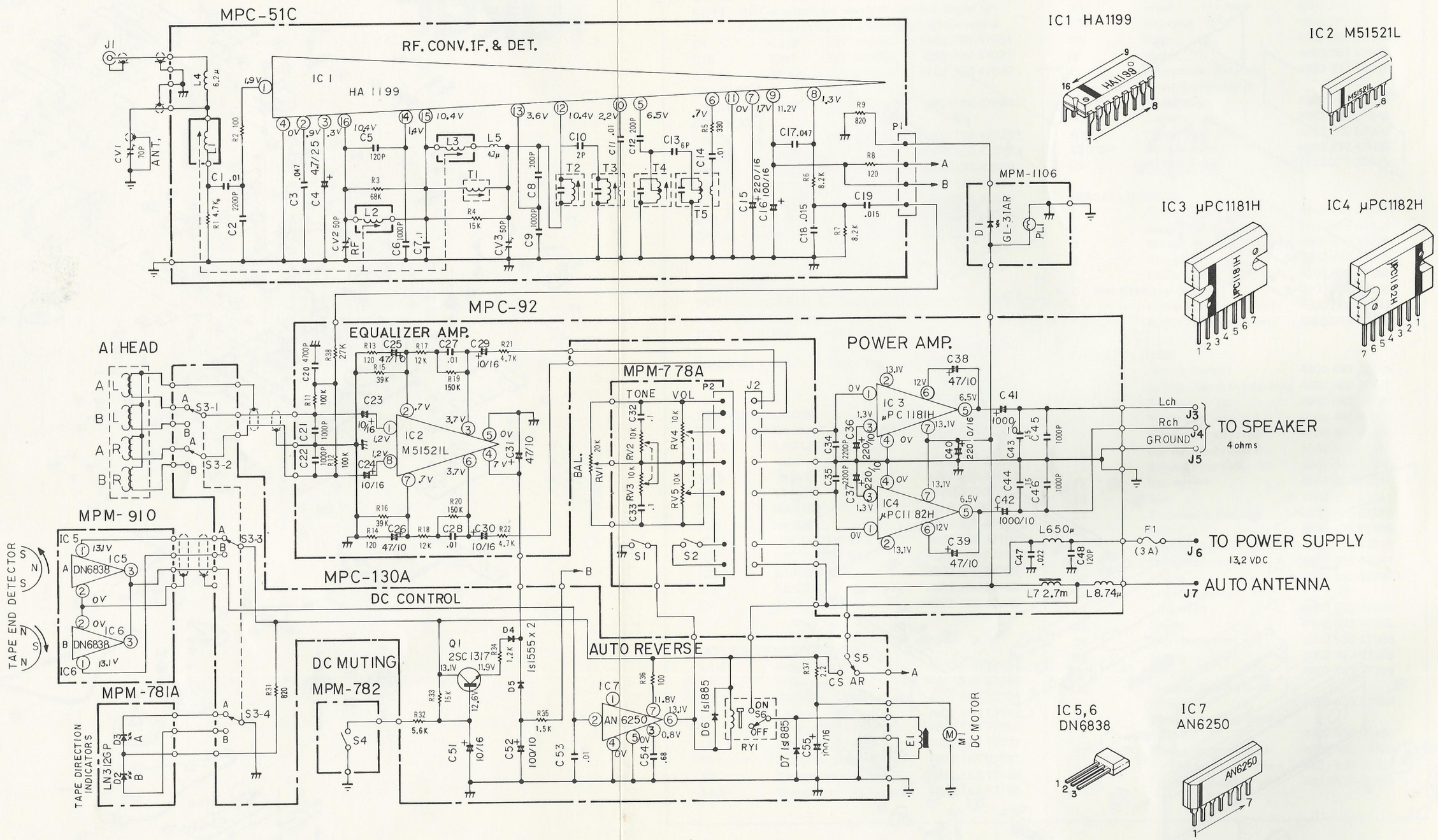

NOTE: 1. All resistance in ohms, K=10^3, M=10^6

2. All capacitance in μF, P=$\mu\mu$F

3. DC voltages against the chassis measured with 100k ohms/volt meter, power supply set at +13.2 VDC, no signal input.

WIRING ON PC BOARDS

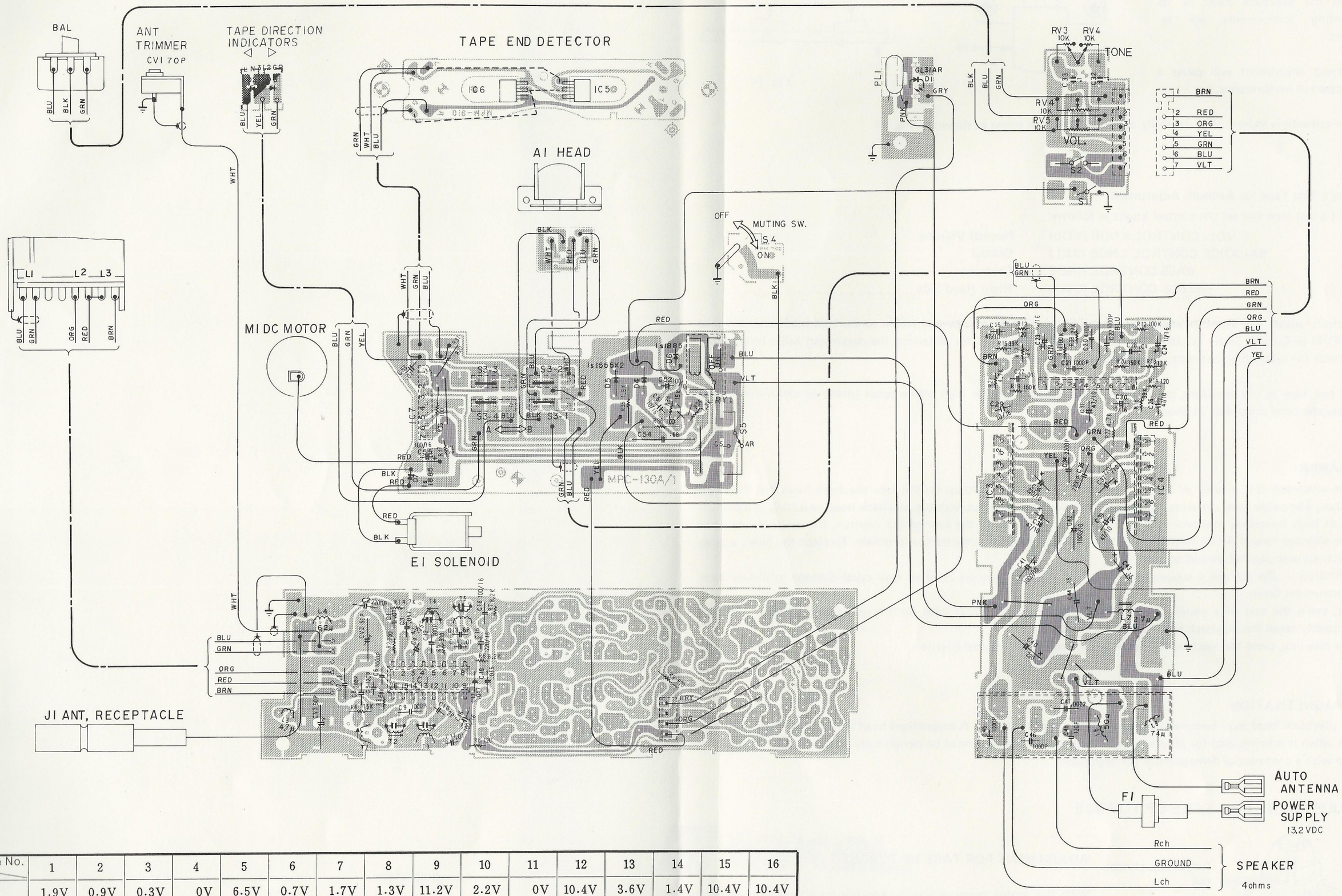

IC \ Pin No.	1	2	3	4	5	6	7	8	9	10	11	12	13	14	15	16
IC 1	1.9V	0.9V	0.3V	0V	6.5V	0.7V	1.7V	1.3V	11.2V	2.2V	0V	10.4V	3.6V	1.4V	10.4V	10.4V
IC 2	1.2V	0.7V	3.7V	7.0V	0V	3.7V	0.7V	1.2V								
IC 3, 4	0V	13.1V	1.3V	0V	6.5V	12.0V	13.1V									
IC 5, 6	13.1V	0V	—													
IC 7	—	—	0.8V	0V	0V	13.1V	11.8V									