Service
Service
Service

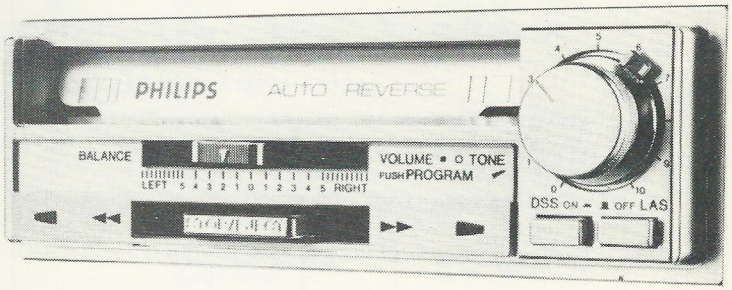

Service Manual

FOUR TRACK AUTO REVERSE STEREO CASSETTE PLAYER

12 V

SPECIFICATIONS.

NUMBER OF TRACKS	– 4 TRACKS – 2 CHANNELS.
TAPE CARTRIDGE	– STEREO/MONAURAL COMPACT CASSETTE.
TAPE SPEED	– 4.75 CM/SEC.
POWER OUTPUT	– 4 WATTS.
SPEAKER IMPEDANCE	– 4 OHMS.
POWER SUPPLY	– 12 VOLTS NEGATIVE TO EARTH.
CURRENT	– 0.5 AMP. (at 0.5 watt output).
SEMICONDUCTORS	– 5 IC's 1 Transistor 3 Diodes

Subject to modification

4802 725 17048

PHILIPS

PLAYBACK HEAD ADJUSTMENT (Azimuth)

Normally, the adjustment is precisely set at the factory and further adjustment should not be required unless the playback head or its mounting components are replaced.

Incorrect adjustment will cause a reduction in performance.

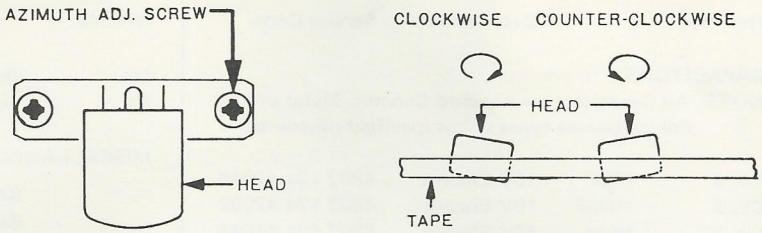

Fig. 1

If the azimuth is moved, then carefully adjust the azimuth screw as shown in Fig. 1

Using a Test Tape for Azimuth Adjustment

Insert a test tape and set the control knobs as follows:

VOLUME CONTROL KNOB (VOL)	Normal Volume
BALANCE CONTROL KNOB (BAL)	In Centre Position
TONE CONTROL KNOB (TONE)	Turn Fully Clockwise

Carefully adjust the azimuth adjustment screw for maximum volume and treble tones. It is recommended that a VTVM or Circuit Tester is connected to the speaker terminals for obtaining the maximum value because the test tape for azimuth adjustment is recorded in high treble tones.

If a test tape is not available, use a stereo music tape with some high treble tones (piano or violin music) and follow the same procedure as above.

CLEANING

After extended use, a layer of iron-oxide from the tape can build-up on the tape playback head and the drive capstan. The oxide layer prevents the tape from making full contact with the playback head, resulting in a gradual loss of high frequency response and an increased noise level. In the case of the capstan, the oxide deposit can cause slippage (wow) which might be mistaken for a more serious mechanical problem. To clean the head, a swab moistened with alcohol should be used.

WARNING – Do not use a solvent such as lighter fluid or thinners as these may cause damage to plastic parts or instrument finish.

First, using the end of a pencil, press the rod in the cassette door back until it clicks into position and then thoroughly clean the playback head, capstan and pinchroller.

After cleaning, press the eject button to return the rod to its original position.

DEMAGNETISATION

The playback head may become magnetised over a period of time. A magnetised head will record noise on a tape, even when it is being used for playback, so it is important that the head be periodically demagnetised. This can be done with a commercial demagnetiser (or degausser).

ADJUSTMENT FOR TAKE-UP TORQUE

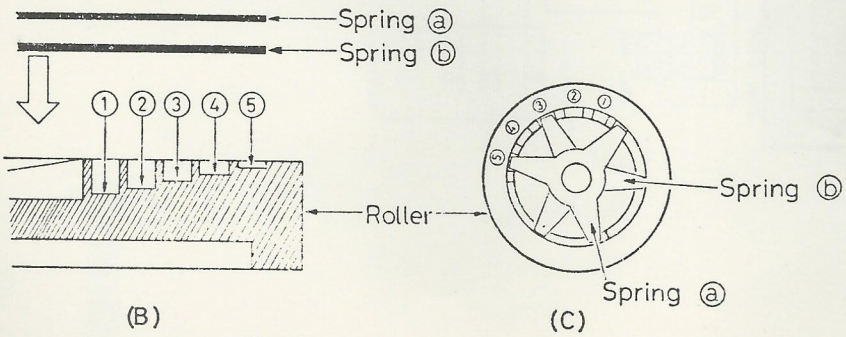

Fig. 2

With the motor rotating use an appropriate gauge to measure the take up torque which should normally be 50 g.cm. If necessary, the torque may be adjusted to this figure by moving the spring up or down the adjustment steps in the take up head. (See Fig 2).

REPLACEMENT PARTS LIST

Ref. No.	Description		Service Code
CAPACITORS			
NOTE: All Capacitors are standard Ceramic, Mylar or Polycarbonate types unless specified otherwise.			
C3, 4	10μF	16V Electro	4802 124 47044
C5, 6	100μF	10V Electro	4802 124 47002
C9, 10	10μF	16V Electro	4802 124 47044
C11	220μF	10V Electro	4802 124 47006
C20, 21	100μF	10V Electro	4802 124 47002
C22, 23	47μF	10V Electro	4802 124 47016
C26, 27	1000μF	16V Electro	4802 124 47051
C28	2200μF	16V Electro	4802 124 47019
C33	220μF	16V Electro	4802 124 47018
RESISTORS & CONTROLS			
NOTE: All Resistors are standard values and tolerances unless specified otherwise.			
RV1	20k ohms	Balance	4802 105 17113
RV2,3,4,5, S9	Tone + Vol. + Switch		4802 102 27092
SEMICONDUCTORS			
IC1	M51521L		4802 209 87107
IC2	M51515L		4802 209 87283
IC3,4	DN6838 (Tape End Detector)		4802 209 87209
IC5	AN6250 (Auto. Reverse Control)		4802 209 87185
Q1	2SC2361-QP		4802 130 47391
D1,2	LN327GP		4802 130 37363
D3	1S1885		4802 130 37123
MISCELLANEOUS ELECTRICAL			
L1,4	Choke	0.74 μH	4802 158 17077
L2	Filter	1.8mH	4802 152 27035
L3	Filter	0.85 μH	4802 157 47036
A1	Playback Head		4802 249 37013
E1	Solenoid		4802 281 57014
S1-4	Slide Switch (Programme)		4802 277 67038
S5-8	Push Switch (LAS & DSS)		4802 277 67039
S10	Micro Switch (Power)		4802 271 37008

Ref. No.	Description		Service Code
M1	Motor		4802 361 27045
F1	Fuse	5 amp.	4802 253 47011
MISCELLANEOUS MECHANICAL			
	Knob	Volume	4802 413 37212
	Knob	Tone	4802 412 37018
	Button	LAS & DSS	4802 410 27266
	Button	Balance	4802 410 27238
	Button	Eject/Stop	4802 410 27267
	PC Board	LED	4802 466 17102
	Escutcheon		4802 459 57084
CASSETTE DECK			
3	Spring		4802 492 67397
4	PC Board	Auto. Reverse	4802 214 57111
7	Lever	Pinchroller (left)	4802 403 37112
8	Lever	" (right)	4802 403 37113
10	Spring	Azimuth Adjust	4802 492 67398
11	Spring	For Item 1	4802 492 37414
13	Spring	For Items 7 & 8	4802 492 37415
14	Pinchroller assy. right		4802 403 47057
15	Pinchroller assy. left		4802 403 47058
16	Cassette Guide right		4802 403 57349
17	Cassette Guide left		4802 403 57351
19	Roller	For Item 18	4802 528 87216
20	Spring	right	4802 492 37416
21	Spring	left	4802 492 37417
26	Sub-Chassis		4802 691 37032
30	Spring	For Items 27 & 29	4802 482 37418
34	PC Board	IC3 & 4	4802 466 17103
39	Roller	4802 528 87217	
40	Spring		4802 492 37419
41	Spring	left	4802 492 47107
42	Spring	right	4802 492 47108
45	Spring	For Item 44	4802 492 37421
46	Lever	F F Lock	4802 403 27085
47	Spring	For Item 46	4802 492 37422
49	Spring	For Item E1	4802 492 37423
51	Flywheel & Capstan		4802 528 67082
53	Belt		4802 358 37078
54	Slip Mechanism		4802 528 77198
55	Washer	For Item 54	4802 532 57147
56	Spring	left	4802 492 37424
57	Spring	right	4802 492 37425

SCHEMATIC

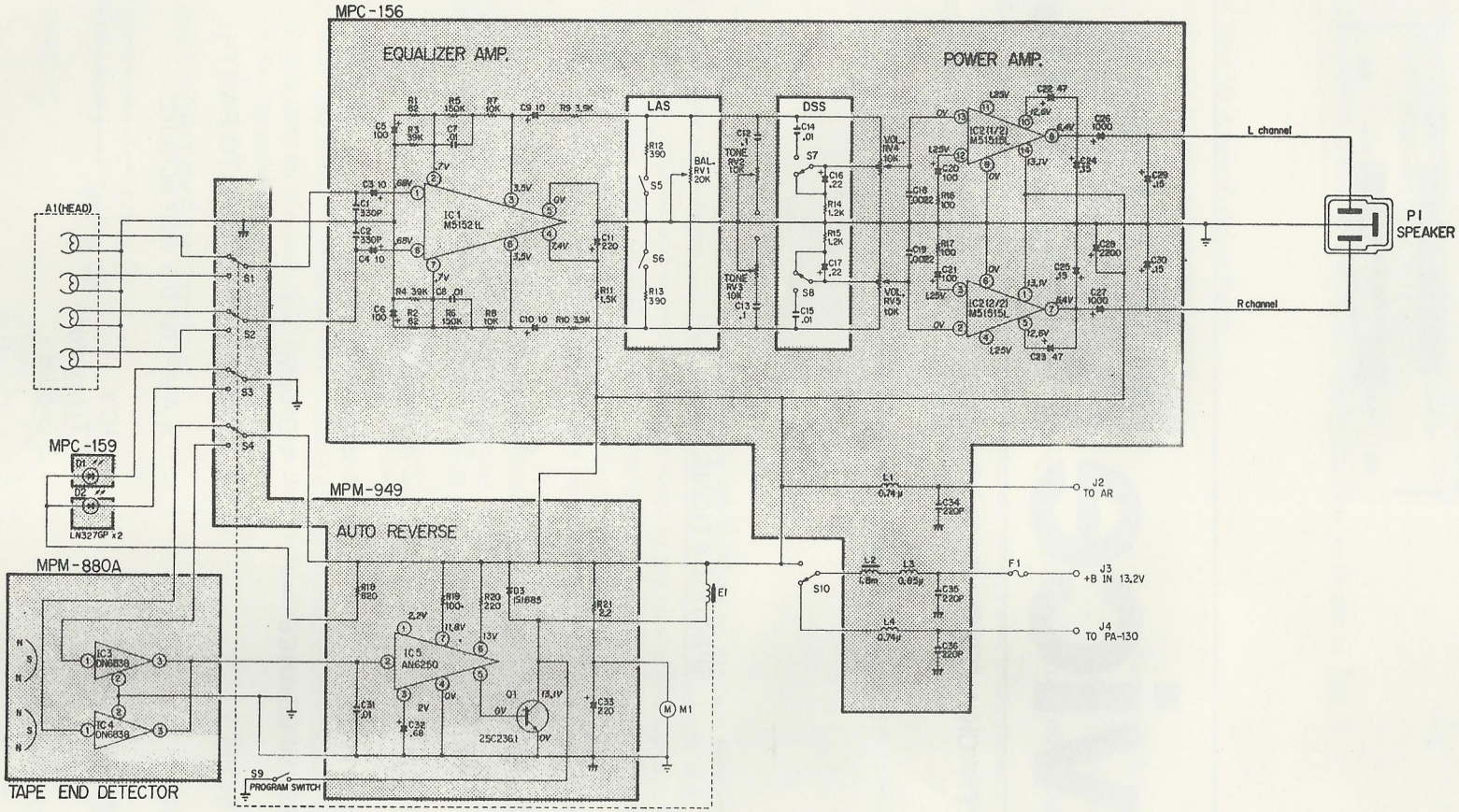
MPC-156
EQUALIZER AMP.
POWER AMP.
LAS
DSS
IC1 M51521L
IC2(1/2) M51515L
IC2(2/2) M51515L
L channel
R channel
P1 SPEAKER
A1(HEAD)
MPC-159
LN327GP x2
MPM-949
AUTO REVERSE
IC5 AN6250
Q1 2SC2361
MPM-880A
IC3 DN6838
IC4 DN6838
TAPE END DETECTOR
PROGRAM SWITCH
J2 TO AR
J3 +B IN 13.2V
J4 TO PA-130

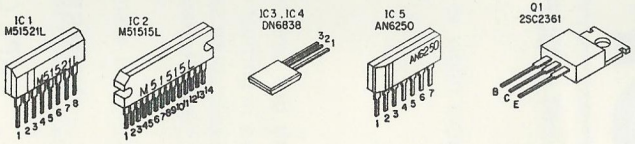
IC1 M51521L
IC2 M51515L
IC3, IC4 DN6838
IC5 AN6250
Q1 2SC2361

CASSETTE DECK

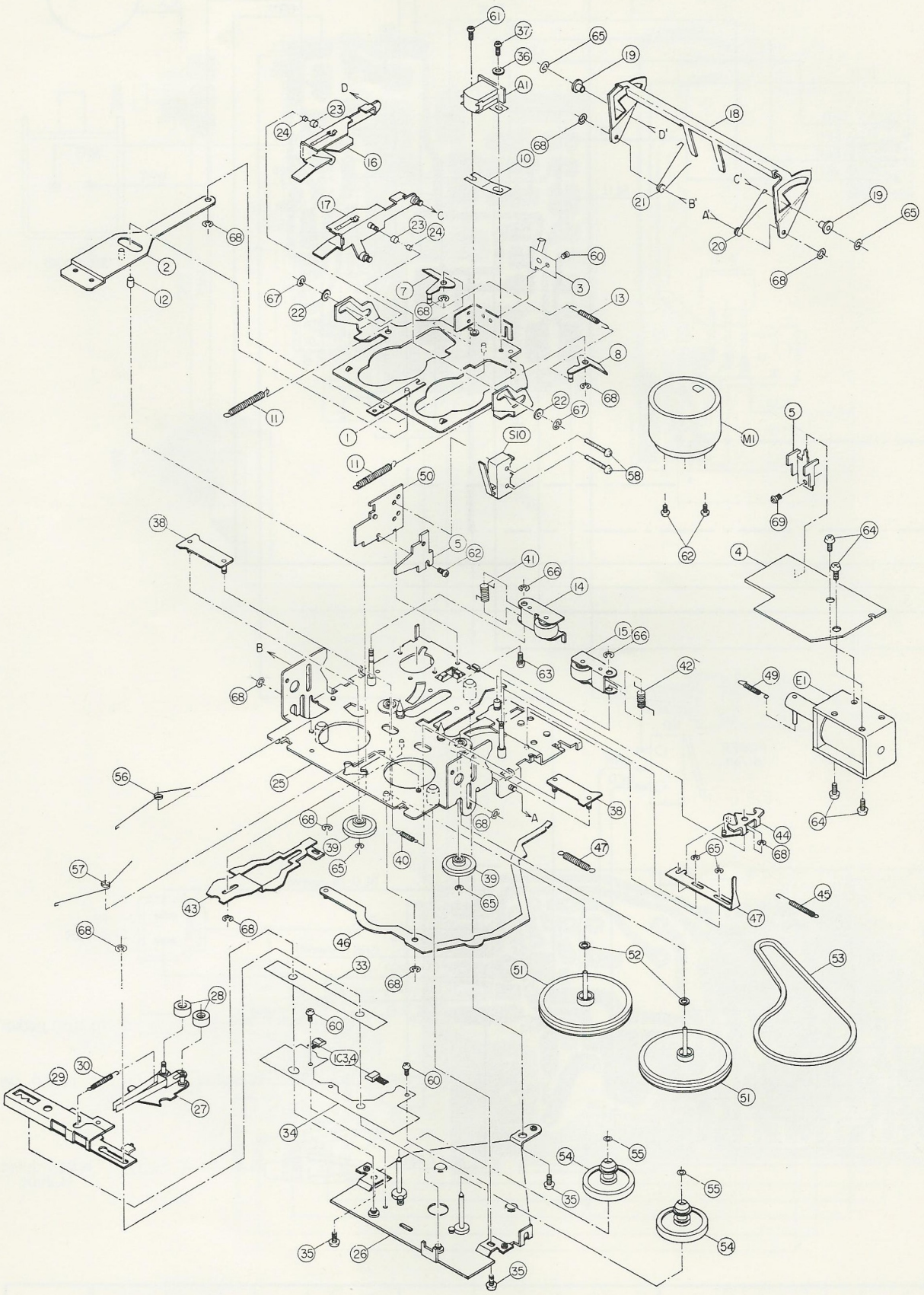

EXPLODED VIEW CABINET PARTS

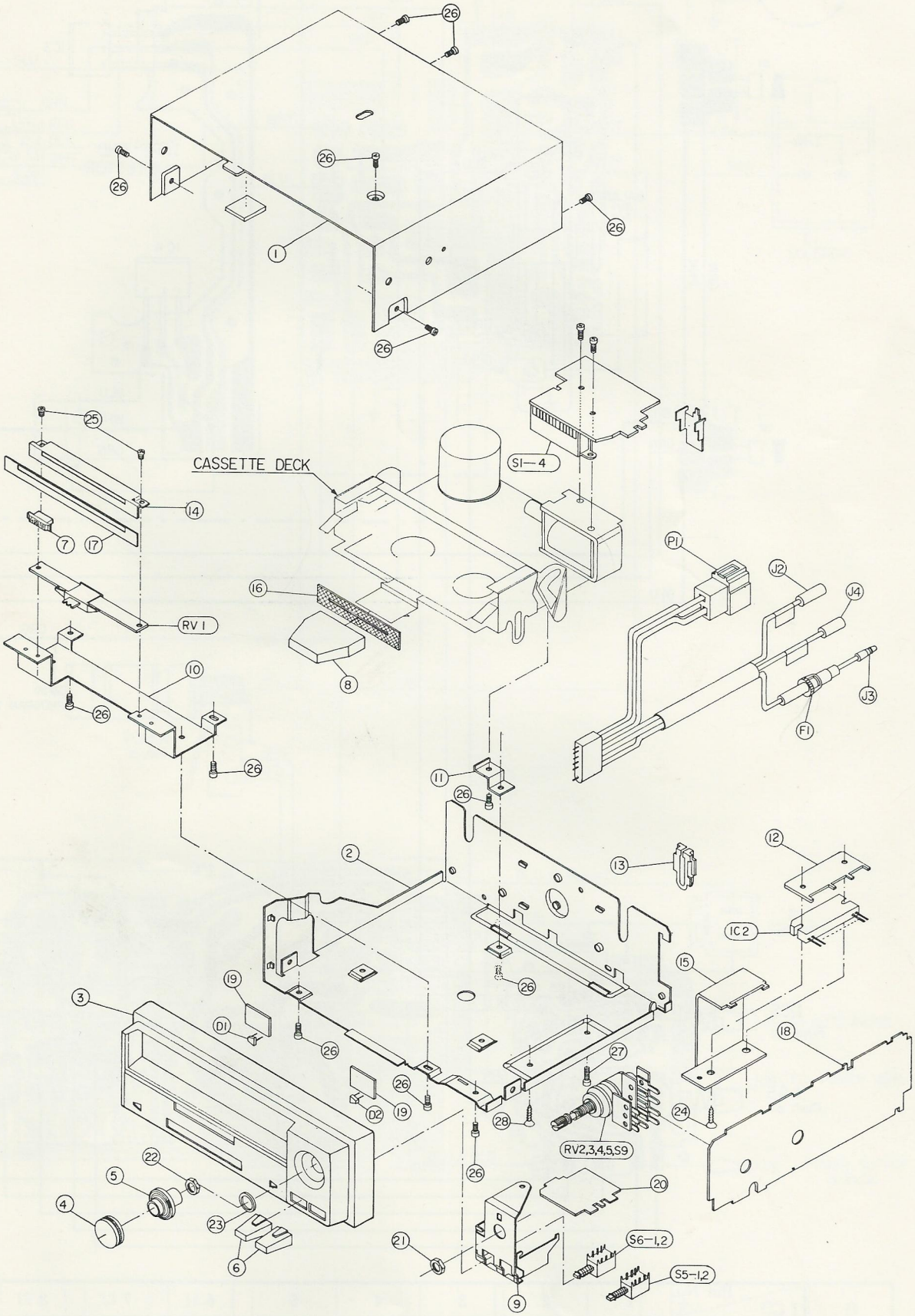

WIRING ON PC BOARDS

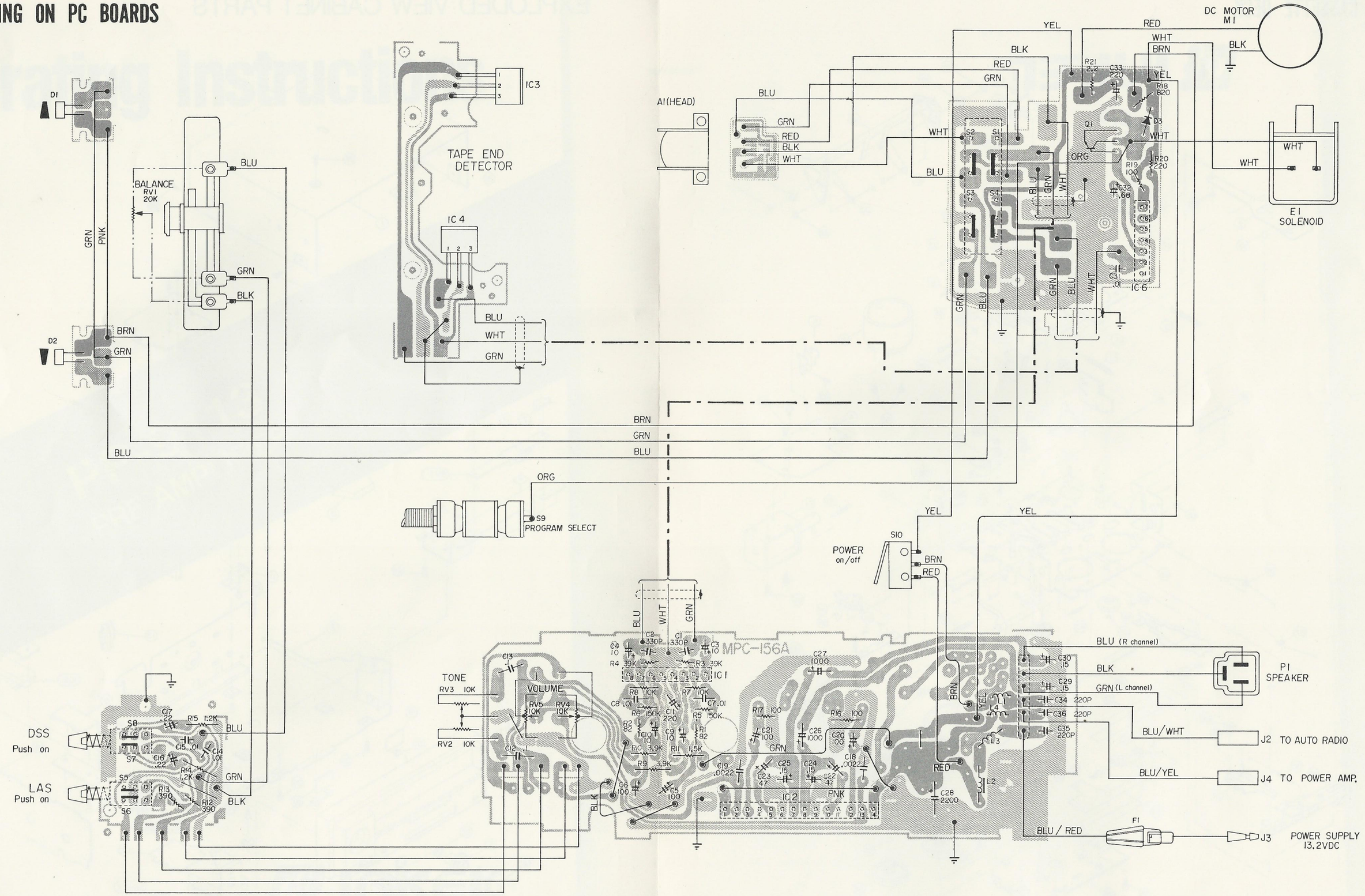

IC \ Pin No.	1	2	3	4	5	6	7	8	9	10	11	12	13	14
IC 1	0.68V	0.7V	3.5V	7.4V	0V	3.5V	0.7V	0.68V						
IC 2	13.1V	0V	1.25V	1.25V	12.6V	0V	6.4V	6.4V	0V	12.6V	1.25V	1.25V	0V	13.1V
IC 3, 4	13.1V	0V	—											
IC 5	2.2V	—	2.0V	0V	0V	13.0V	11.8V							

Transistor	E	C	B
Q 1	0V	13.1V	0V