Car Stereo cassette player 02AC480A

Service
Service
Service

Service Manual

FOUR TRACK AUTO REVERSE STEREO CASSETTE PLAYER **12 V**

SPECIFICATIONS.

NUMBER OF TRACKS	4 Tracks, 2 Channels.
TAPE CARTRIDGE	Stereo/Monaural Compact Cassette.
TAPE SPEED	4.75 cm/sec.
POWER OUTPUT	3.5 watts.
SPEAKER IMPEDANCE	4 ohms.
POWER SUPPLY	12 volts negative to earth.
CURRENT	0.6 amp. (at 0.5 watt output).
SEMI CONDUCTORS	3 ICs. 3 Transistors. 10 Diodes.

Subject to modification
4802 725 17033

PHILIPS

ADJUSTMENT FOR PINCHROLLER PRESSURE

Hold a tension gauge to the pinchroller as shown in Fig. 1(a), and move it in the direction of the arrow noting the tension at which the pinchroller moves.
If the gauge shows less than 300 gram, set the spring to "A" in Fig. 1(b) or if it is more than 400 gram, set the spring to "B".
The tension for both left and right pinchrollers should always be between 300 and 400 gram.

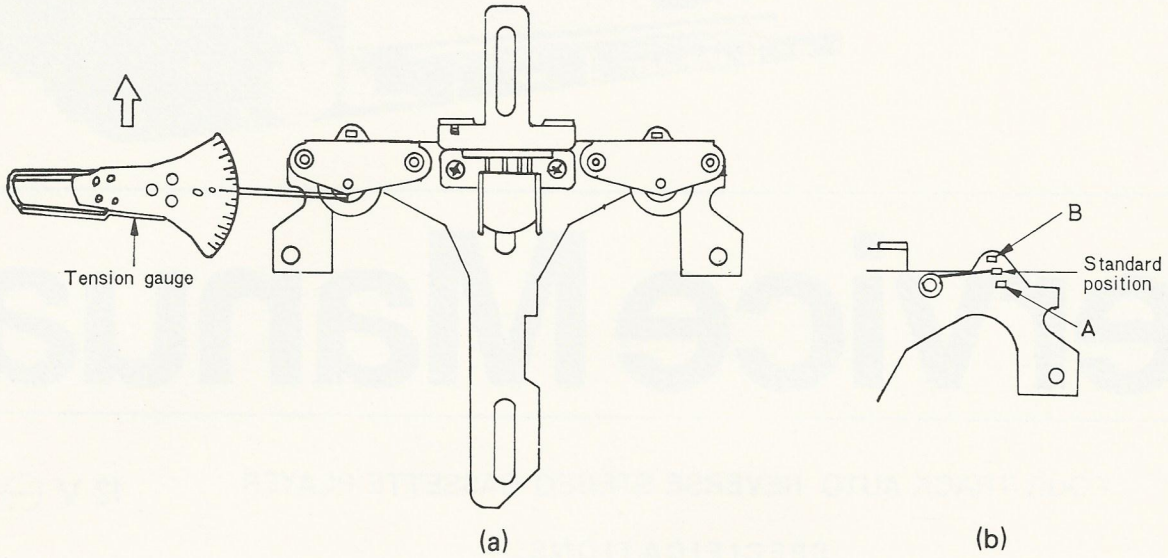

Fig. 1

ADJUSTMENT FOR TAKE-UP TORQUE

With the motor rotating, measure the torque as shown in Fig. 2(a).
If the gauge shows less than 40 gram-cm, set the spacer to the "A" position, and if it shows more than 50 gram-cm set the spacer to the "B" position.
The torque should always be between 40 and 50 gram-cm with a 13.2V power supply.

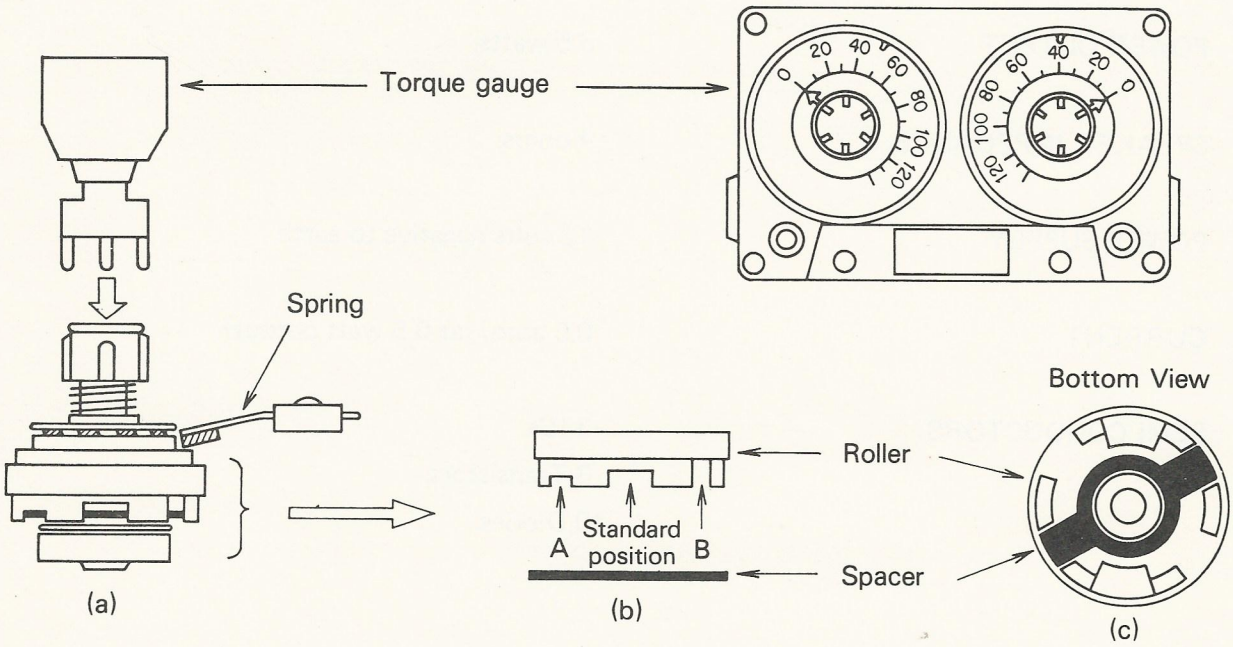

Fig. 2

PLAYBACK HEAD ADJUSTMENT (Azimuth)

Normally, the adjustment is precisely set at the factory and further adjustment should not be required unless the playback head or its mounting components are replaced.

Incorrect adjustment will cause a reduction in performance.

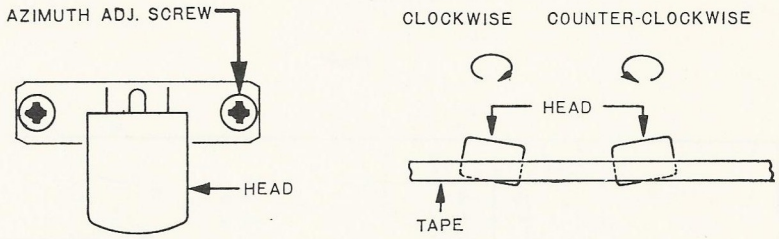

Fig. 3

If the azimuth is moved, then carefully adjust the azimuth screw as shown in Fig. 3.

Using a Test Tape for Azimuth Adjustment

Insert a test tape and set the control knobs as follows:

VOL. CONTROL KNOB (VOL)	–	Normal Volume
BALANCE CONTROL KNOB (BAL)	–	Central
TONE CONTROL KNOB		Fully Clockwise

Carefully adjust the azimuth adjustment screw for maximum volume and treble tones. It is recommended that a VTVM or Circuit Tester is connected to the speaker terminals for obtaining the maximum value because the test tape for azimuth adjustment is recorded in high treble tones (6,300 Hz ordinary).

If a test tape is not available, use a stereo music tape with some high treble tones (piano or violin music) and follow the same procedure as above.

CLEANING

After extended use, a layer of iron-oxide from the tape can build-up on the tape playback head and the drive capstan. The oxide layer prevents the tape from making full contact with the playback head, resulting in a gradual loss of high frequency response and an increased noise level. In the case of the capstan, the oxide deposit can cause slippage (wow) which might be mistaken for a more serious mechanical problem.
To clean the head, a swab moistened with alcohol should be used.
WARNING – do not use a solvent such as lighter fluid or thinners as these may cause damage to plastic parts or instrument finish.
First, using the end of a pencil, press the rod in the cassette door back until it clicks into position and then thoroughly clean the playback head, capstan and pinchroller.
After cleaning, press the eject button to return the rod to its original position.

DEMAGNETISATION

The playback head may become magnetised over a period of time. A magnetised head will record noise on a tape, even when it is being used for playback, so it is important that the head be periodically demagnetised. This can be done with a commercial demagnetiser (or degausser).

SCHEMATIC

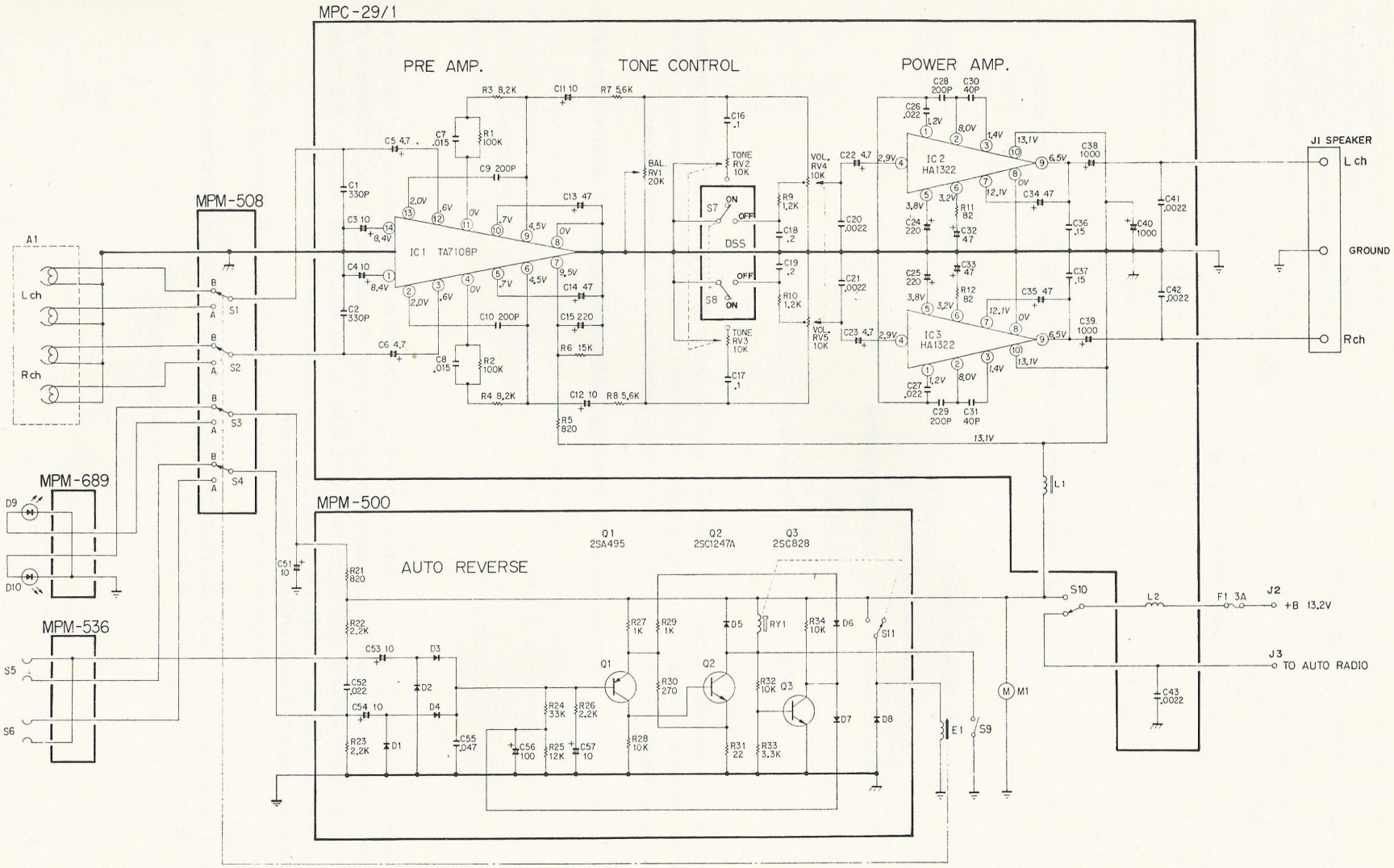

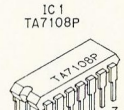

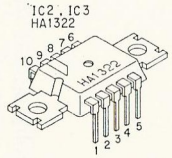

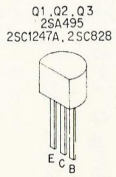

REFER ALSO TO PAGE 10

REPLACEMENT PARTS LIST

Ref. No.	Description			Service Code
CAPACITORS				
C1, 2	330pF	50V	Ceramic	4822 120 21094
C3, 4	10μF	16V	Electro	4802 124 47044
C5, 6	4.7μF	25V	Electro	4802 124 47034
C7, 8	.015μF	50V	Mylar	4802 121 47161
C9, 10	200pF	50V	Ceramic	4802 122 47077
C11, 12	10μF	16V	Electro	4802 124 47044
C13, 14	47μF	10V	Electro	4802 124 47016
C15	220μF	16V	Electro	4802 124 47018
C16, 17	.1μF	12V	Ceramic	4802 122 47055
C18, 19	.2μF	12V	Ceramic	4802 122 47109
C20, 21	.0022μF	50V	Ceramic	4822 122 30114
C22, 23	4.7μF	25V	Electro	4802 124 47034
C24, 25	220μF	10V	Electro	4802 124 47006
C26, 27	.022μF	50V	Mylar	4802 121 47163
C28, 29	200pF	50V	Ceramic	4802 122 47077
C30, 31	40pF	50V	Ceramic	4822 122 31069
C32, 33, 34, 35	47μF	10V	Electro	4802 124 47016
C36, 37	.15μF	50V	Mylar	4802 121 47173
C38, 39	1000μF	10V	Electro	4802 124 47003
C40	1000μF	16V	Electro	4802 124 47051
C41, 42, 43, 44, 45	.0022μF	50V	Ceramic	4822 122 30114
C51	10μF	16V	Electro	4802 124 47044
C52	.022μF	50V	Ceramic	4802 121 47163
C53, 54	10μF	16V	Electro	4802 124 47044
C55	.047μF	12V	Ceramic	4802 122 47054
C56	100μF	10V	Electro	4802 124 47002
C57	10μF	16V	Electro	4802 124 47044
SEMICONDUCTORS:				
IC1	TA 7108P			4802 209 87036
IC2, 3	HA 1322			4802 209 87062
Q1	2SA495-OY			4802 130 47031
Q2	2SC1247A-VS			4802 130 47175
Q3	2SC828QR			4822 130 40965
D1, 2, 3, 4	1S555 (Use OA626200)			4802 130 37033
D5, 6	1S1885			4802 130 37123
D7, 8	1S555 (Use OA626200)			4802 130 37033
D9, 10	LED. GL30PG			4802 130 37095
MISCELLANEOUS ELECTRICAL:				
A1	Playback Head			4802 249 37005
E1	Solenoid			4802 281 57001
F1	Fuse. 3 amp.			4802 253 47006
M1	Motor			4802 361 27037
RY1 (S11)	Relay			4802 280 87005
L1	Choke. 3mH			4802 152 27028
L2	Choke. .74μH			4802 158 17077
S1, 2, 3, 4	Slide Switch			4802 277 27038
S5, 6	Leaf Switch (tape end)			4802 278 97031
S7, 8	Slide Switch			4802 277 27038
S10	Micro Switch (power supply)			4802 271 37008
STYLING:				
1	Escutcheon Assy.			4802 459 57045
7	Push Button (balance)			4802 413 97144
8	Push Button (tone)			4802 413 37154
9	Push Button (volume)			4802 413 37155
10	Push Button (FF left)			4802 410 27113

Ref. No.	Description	Service Code
11	Push Button (stop/eject)	4802 410 27114
12	Push Button (FF right)	4802 410 27115
CASSETTE DECK:		
16	Shaft	4802 535 77066
18	Spring	4802 492 47019
19	"E" clip. 1.2 mm	4822 530 70119
22	"E" clip. 3 mm	4822 530 70123
25	Spring	4802 492 37204
28	Spring	4802 492 67181
29	Spring	4802 492 67179
30	Spring	4802 492 37146
31	Pinchroller assy. (left)	4802 403 47019
32	Pinchroller assy. (right)	4802 403 47018
34	"E" clip. 1.5 mm	4822 530 70121
36	"E" clip. 2 mm	4822 530 70122
38	Spring	4802 492 37205
45	Screw (for item 43)	4802 502 17045
46	Cassette loading mechanism (right)	4802 403 57167
47	Cassette loading mechanism (left)	4802 403 57168
48	Roller (for item 46, 47)	4802 535 27003
49	Spring	4802 492 37206
50	Spring	4802 492 37207
51	Spring	4802 492 67183
52	Washer. 2 mm	4822 532 10331
53	Lever (FF right)	4802 403 27051
54	Lever (stop/eject)	4802 403 27052
55	Lever (FF left)	4802 403 27053
56	"E" ring. 4 mm	4822 530 70124
58	Lever	4802 492 37149
59	Spring	4802 492 37151
62	Spring	4802 492 67184
63	Lever	4802 403 27029
64	Pulley (motor)	4802 528 87075
65	Screw. 2 x 3 mm	4802 502 17038
68	Spring	4802 492 37208
69	Pin. Plunger	4802 535 17007
70	Spring	4802 492 47023
73	Lever (FF idler. right)	4802 403 27018
74	Lever (FF idler. left)	4802 403 27017
75	Roller. Forward idler.	4802 528 77034
76	Spring	4802 492 37152
77	Spring	4802 492 37241
78	Pulley	4802 528 87065
79	Roller	4802 535 27002
80	Flywheel	4802 528 67024
81	Screw. 2 x 3 mm	4822 502 10908
82	Brake (slip emchanism)	4802 403 17013
83	Srping	4802 492 37154
86	Roller (FF idler)	4802 528 17035
87	Spring	4802 492 37209
88	Cap	4802 532 57071
89	Slip mechanism	4802 528 27047
91	Belt (drive)	4802 358 27003
96	PC. Board. S1 to S4	4802 214 57052
97	PC. Board. S5 to S6	4802 214 57054
104	Washer. 2 mm	4822 532 10331
	Cassette Deck Complete	4802 691 27025

Later models of AC480 will contain changes to the Tape End Detector circuit as illustrated in this diagram.

The two leaf switches will be replaced by two ICs. which are activated by Ferrite magnets embodied in the Slip mechanism, and the three transistors in this circuit will be replaced by a single IC. Service codes for the new components are listed below.

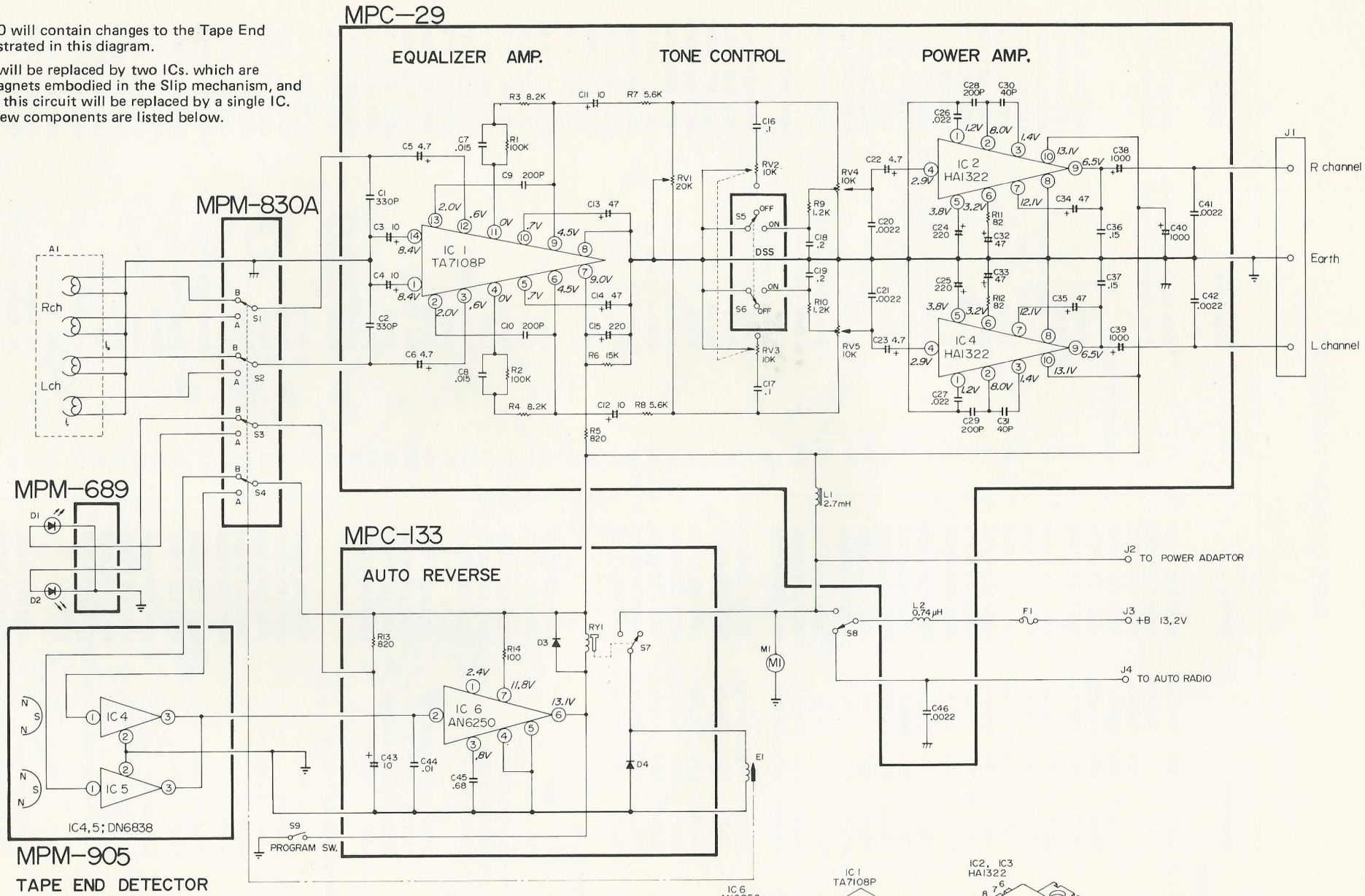

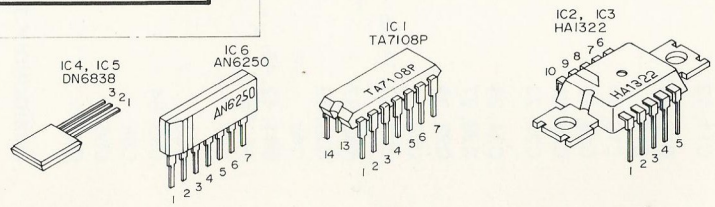

IC DN 6838	4802 209 87209
IC AN 6250	4802 209 87185
Slip Mechanism (Item 89)	4802 528 27049
Spring (Item 51)	4802 492 67229

WIRING ON PC BOARD

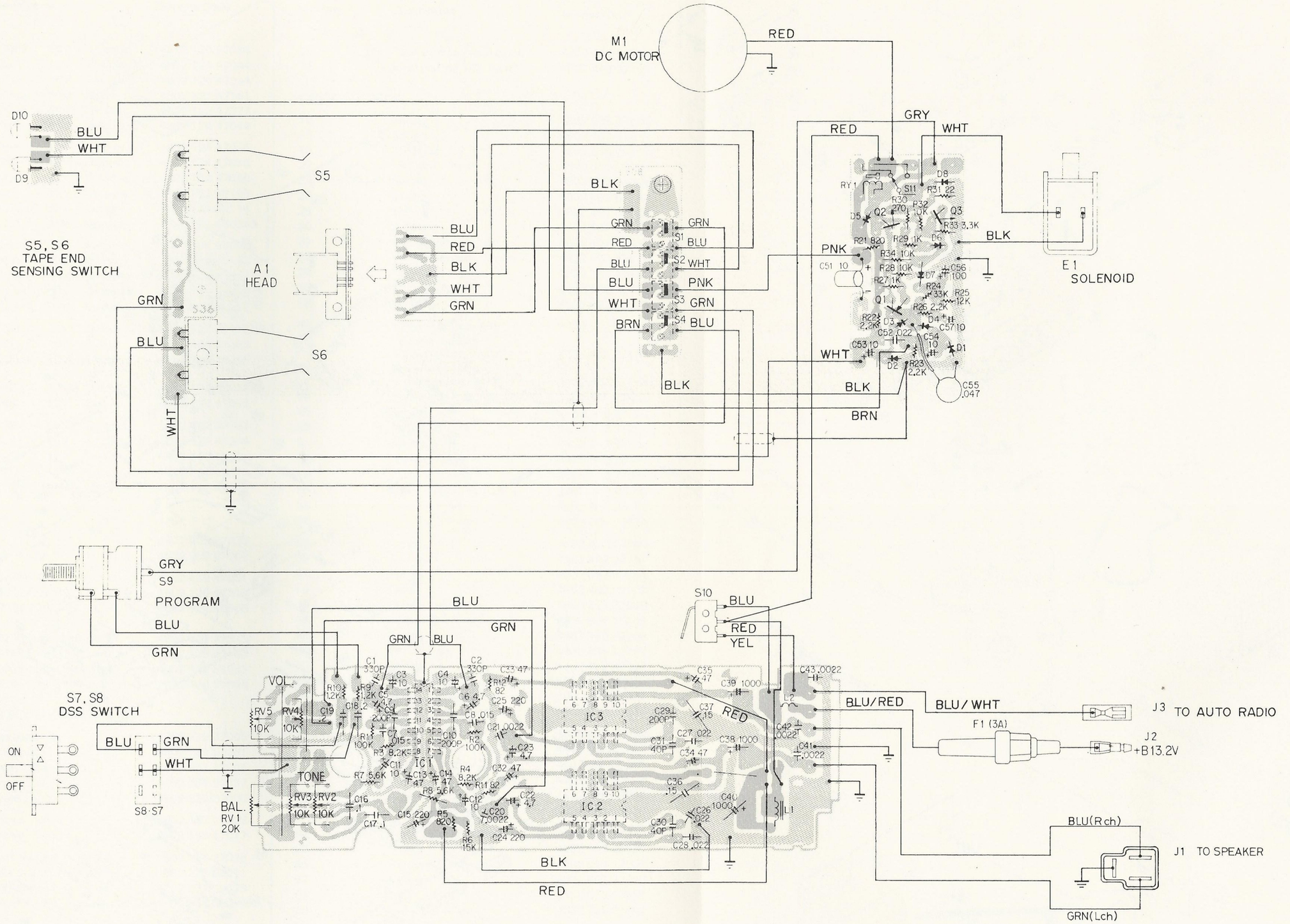

Fig. 5

IC \ Pin No.	1	2	3	4	5	6	7	8	9	10	11	12	13	14
IC 1	8.4V	2.0V	0.6V	0V	0.7V	4.5V	9.5V	0V	4.5V	0.7V	0V	0.6V	2.0V	8.4V
IC 2	1.2V	8.0V	1.4V	2.9V	3.8V	3.2V	12.1V	0V	6.5V	13.1V				

EXPLODED VIEW

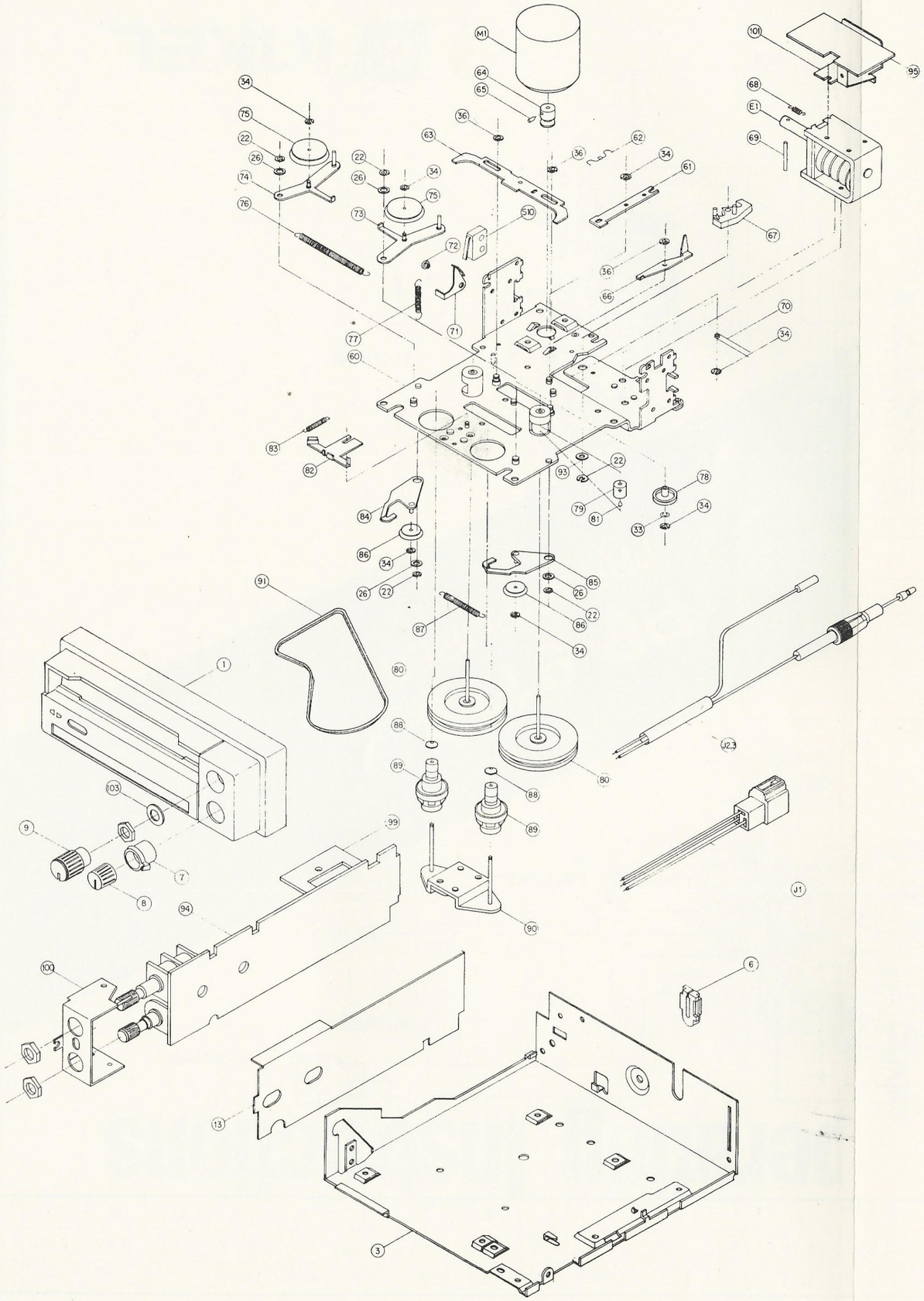

Fig. 6 (a)

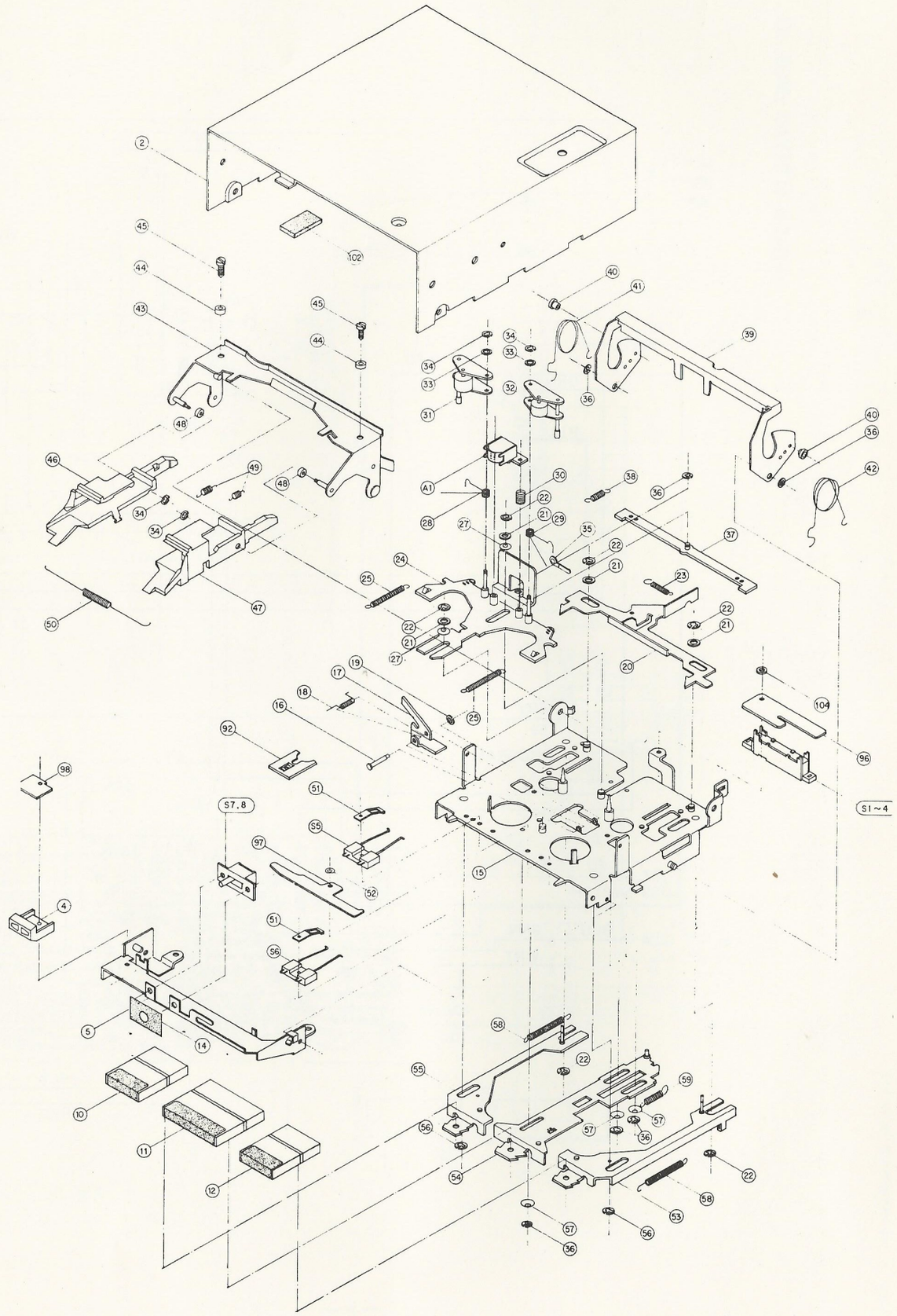

Fig. 6 (b)