Car Stereo cassette player 02AC035A

Service
Service
Service

Service Manual

FOUR TRACK AUTO REVERSE CAR STEREO CASSETTE PLAYER
WITH LOCKING FAST FORWARD AND REVERSE

12 V

SPECIFICATIONS

NUMBER OF TRACKS	4 TRACKS - 2 CHANNELS.
TAPE CARTRIDGE	STEREO/MONAURAL COMPACT CASSETTE.
TAPE SPEED	4.75 CM/SEC.
POWER OUTPUT	12 WATTS.
SPEAKER IMPEDANCE	4 OHMS.
POWER SUPPLY	12 VOLTS NEGATIVE TO EARTH.
CURRENT	0.5 AMP. (AT NO SIGNAL)
SEMICONDUCTORS	3 IC's 2 Transistors 6 Diodes

Subject to modification

4802 725 17093

PHILIPS

REPLACEMENT PARTS LIST

Ref. No.	Description	Service Code
Capacitors		
All Capacitors are standard Ceramic, Mylar Polycarbonate or Electrolytic types unless specified otherwise.		
—	Capacitor Ceramic feed through	4802 122 77018
Resistors		
All Resistors are standard valves and tolerance unless specified otherwise.		
RV1	RES. VAR. 20 kA. Tone	4802 102 17073
RV2	RES. VAR. 20 kA. Volume	4802 102 17073
RV3	RES. VAR. 50 kB. Balance	4802 101 27173
RC1	Resistor Block	4802 116 97012
Semiconductors		
IC1	I.C. AN 7310 PRE. Amp.	4822 209 81549
IC4	I.C. HA 1377 Power Amp.	4822 209 80732
IC5	I.C. AN 6250N Auto Stop Det.	4802 209 87185
Q1	Transistor 2SC1061C	4822 130 44325
Q2	Transistor 2SA673C	4802 130 47394
D1	Diode V06C	4822 130 30877
D2	Diode V06A	4822 130 31227
LED 1 A.B.	Diode Led Indicators	4802 130 37534
Miscellaneous		
L1	Coil Choke 1.5mH	4802 152 27059
19	Head Playback	4802 249 37025
F1	Fuse 2.5A	4822 253 20024
S1	Switch Power	4802 271 37072
S2	Switch Slide F/R Selector	4802 278 97088
S3	Switch Push Programme	4802 276 17174
57	Switch Reed	4802 280 27032
23	Solenoid	4802 281 57034
Cassette Deck		
1	Escutcheon Assembly	4802 459 57108
6	Knob (Volume)	4802 413 37295
7	Knob (Tone)	4802 410 27634
8	Knob (Balance)	4802 410 27635
9	Button Program	4802 410 27632
10	Button for FF Rewind	4802 410 27633
11	Button Eject	4802 410 27631
12	Pressure Roller Assy.	4802 528 87293
15	Spring for Pressure Roller	4802 492 37568
16	Spring for Pressure Roller	4802 492 37555
20	Guide Shaft Roller	4802 532 27104
21	Idler Wheel Play	4802 528 87292
22	Spring for Idler	4802 492 37564
24	Spring Auto Reverse	4802 492 37565
25	Brake Spring Assembly	4802 403 17087
26	Brake Spring Assembly	4802 403 17086
27	Spring F/F Lever	4802 492 37567
28	Spring Rewind Lever	4802 492 37566
29	Idler Assembly RF	4802 403 27106
30	Idler RF	4802 528 87291
31	Spring Idler RF	4802 492 37569
32	Spring for FR Lock Lever	4802 492 67462
34	Spring Trip Lever	4802 492 37563
36	Motor DC	4802 361 27146
37	Turntable Assy. (Forward)	4802 528 17314
38	Turntable Assy. (Reverse)	4802 528 17313
39	Spring Tension	4802 492 37556
40	Flywheel Assembly	4802 528 67115
41	Pulley Middle	4802 528 87289
42	Belt Flywheel 1.5 x 1.5 x 192M	4802 358 37139
47	Spring for Eject Lever	4802 492 37561
48	Spring for Eject Lever	4802 492 37562
49	Spring for Lock Lever	4802 492 37559
51	Spring Release Off Lever	4802 492 37557
52	Spring Pivot Arm	4802 492 37558
53	Arm Cassette Assembly	4802 403 37125
54	Roller for Cassette Arm	4802 528 77232

EXPLODED VIEW 1

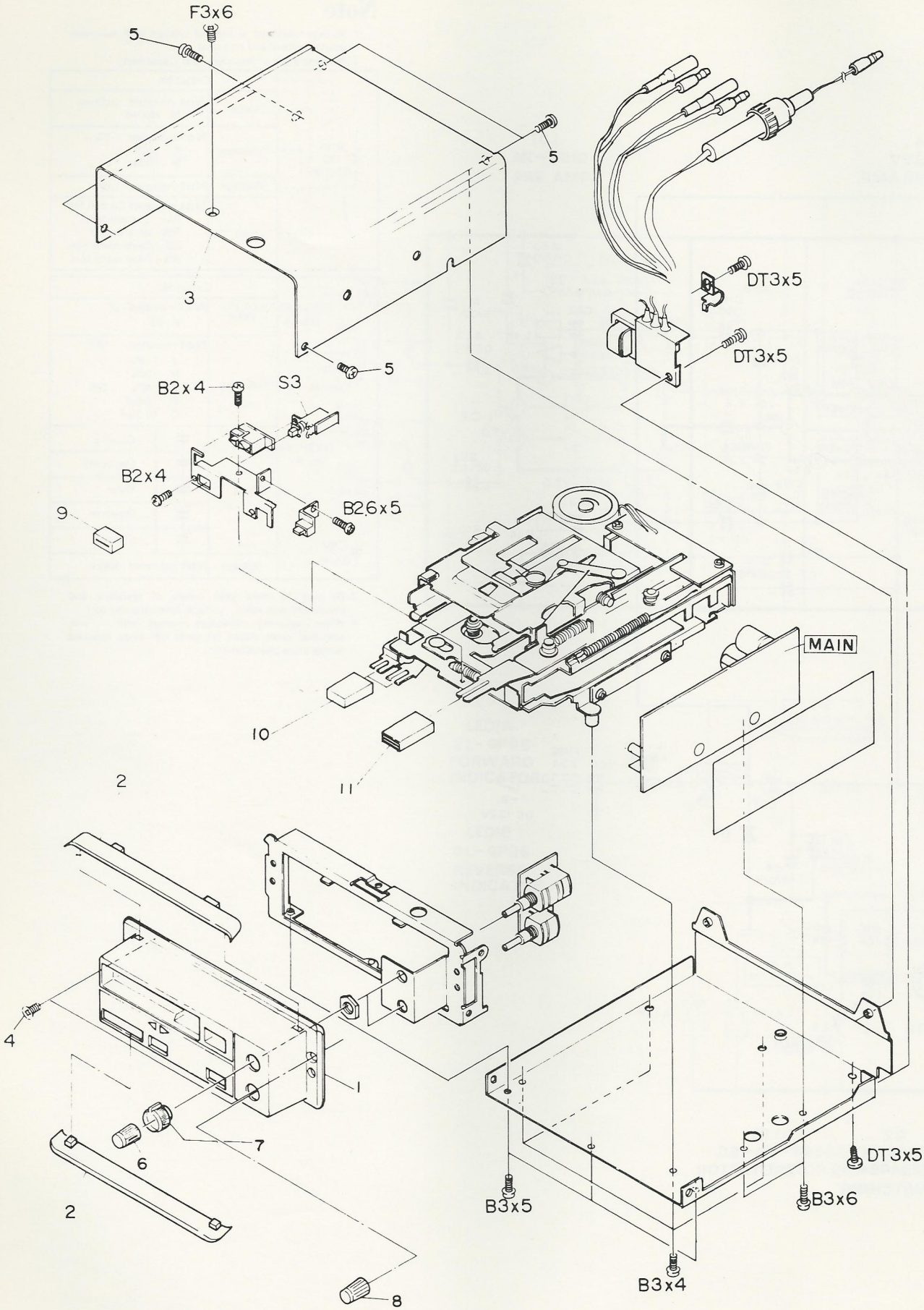

EXPLODED VIEW 2

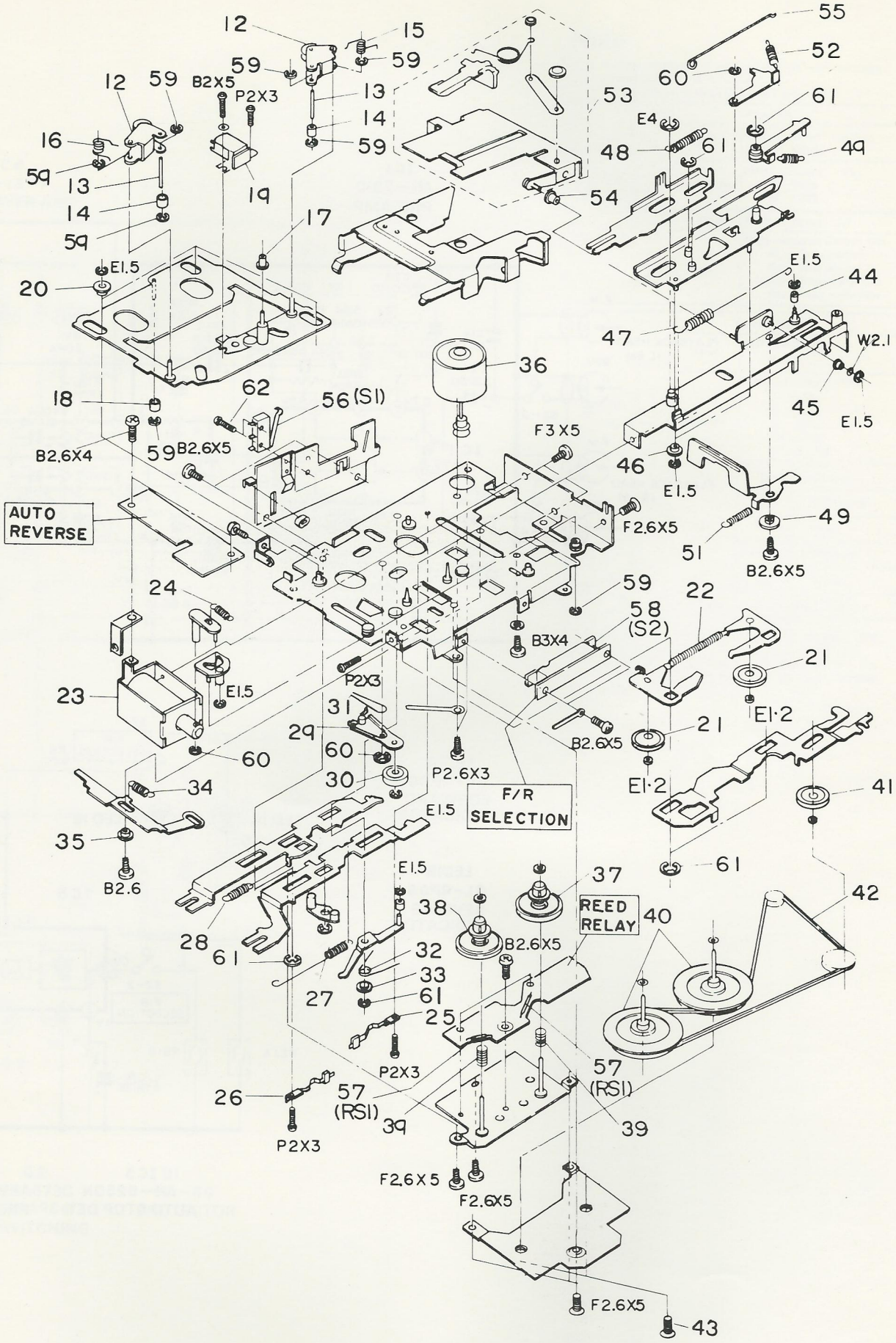

ADJUSTMENT

Step		Adjustments	Mode	Test tape	Input Terminal	Output Terminal	Adjust	Adjusted Value	Remarks
1	(1)	Head azimuth	Tone: Max., Balance: Center						
	(2)		Playback	MTT-118 (1kHz, −10dB)	—	Speaker lead (4Ω load)	RV2 (Volume)	250 mV	Note 1
	(3)			MTT-114 (10kHz, −10dB)	—		Azimuth adjustment screw	$-10\ ^{+6}_{-11}$ dB	

Note: 1. Play back the tape (1 kHz, −10 dB) and adjust the volume control so that the reading of the VTVM is 250 mV, and then play back the tape (10 kHz, −10 dB) and adjust the azimuth adjustment screw so that outputs of both channels are near −10 dB.

INSPECTION OF MECHANISM

Check Item			Reference Value	Remarks
1	Torque	Take-up	50 to 70 gr-cm	Measure in playback mode
		FF	50 gr-cm or more	Measure in FF mode
		Rewind	50 gr-cm or more	Measure in REW mode
2	Back tension		1.5 to 3 gr-cm	Measure in playback mode
3	Operating force	Cassette insertion	0.5 kg or less	Measure in horizontal condition
		FF/Rewind button	2.5 kg or less	
		Eject button	4.0 kg or less	
4	Flywheel thrust gap		0.1 to 0.3 mm	———
5	Head position		3.2±0.3 mm	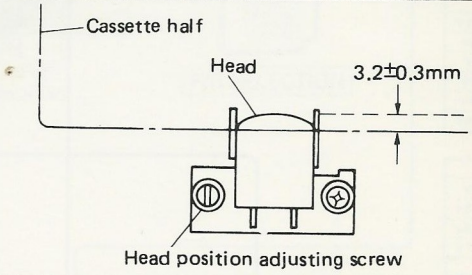

LUBRICATION

Lubricate one or two drops of oil to rotating point or lubricate grease to sliding point.
Lubricate the respective parts listed once every 1000 hours or once a year under normal conditions of use.
Avoid oiling them excessively, or rotation may become irregular because of oil splashes.

Lubrication point		Oil or Grease
Rotary section	Metal and metal	Pan motor oil (10W-40)
	Mold and metal	Sonic slider oil (#1600)
Sliding section	Metal and metal	Hitasol (MO-138)
	Mold and mold Mold and metal	White grease (FL-LUBE-A)
Spring resonance prevention		Floil (GB-TS-1)

BLOCK DIAGRAM

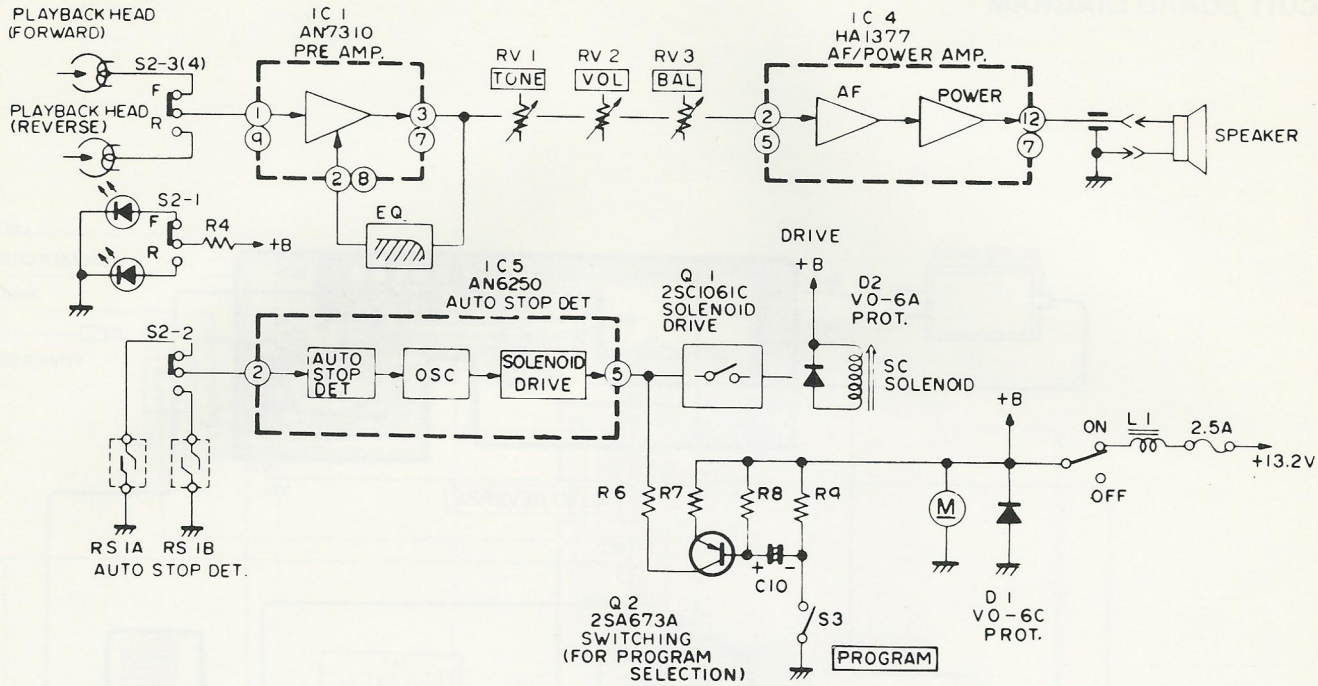

DISASSEMBLY

1. Upper cover

Remove Ⓐ (six) screws.

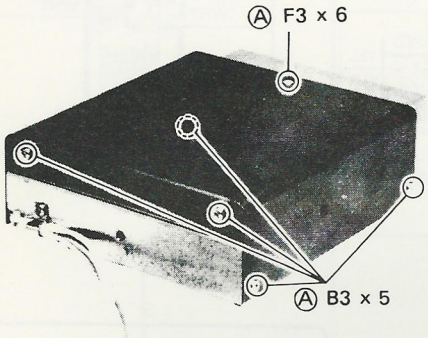

Fig. 1

2. Main PC board

Remove Ⓑ (two) screws.

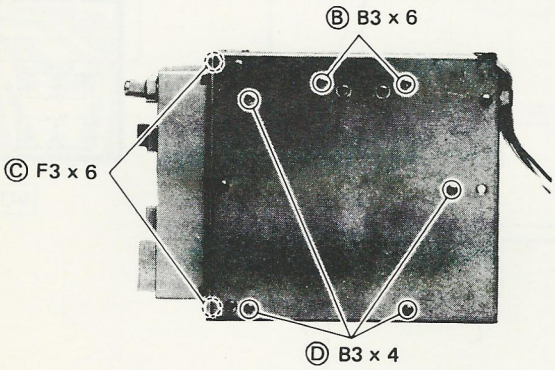

Fig. 2

3. Escutcheon

1) Remove three knobs (Tone, volume, Balance).

2) Remove Ⓒ (two) screws.

4. Cassette chassis

Remove Ⓓ (four) screws.

SCHEMATIC DIAGRAM

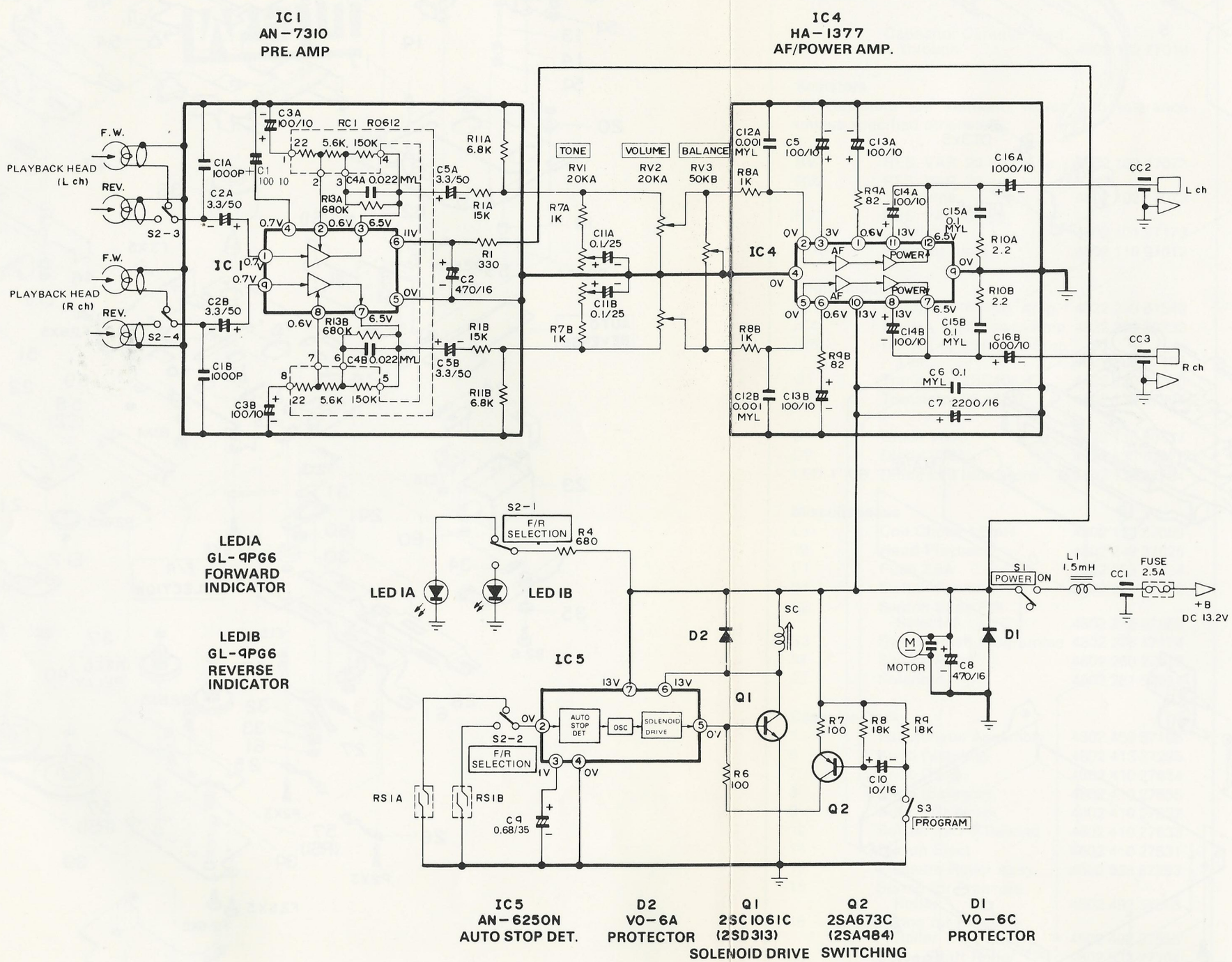

Note

1. Voltage measured at base of chassis with minimum volume control and no signal.
2. Nomenclature of Resistors and Capacitors

R101 150 RS·1·K	Circuit No.	
	Value	Not indicated Ω (Ohm) M : 1000 kΩ
	Tolerance	Not indicated ±5% K : ±10% M : ±20%
	Wattage	Not indicated ¼W
	Sort	Not indicated Carbon film RC : Composition RW : Wire wound RS : Oxide metal film RN : Fixed metal film

C101 0.001·M	Circuit No.	
	Value	Not indicated μF P : PF
	Tolerance	Not indicated ±10% J : ±5% M : ±20% Z : +80%, −20% D : ±0.5pF C : ±0.25pF
	Sort	Ceramic
		Electrolitic
		Mylar
		Polyester
		Styrol
C102 0.1/16	Voltage	Not indicated 50WV

3. Be sure to make your orders of resistors and capacitors with value, voltage, tolerance and sort.
4. When replacing capacitors marked with ÷, use specified ones stated on parts list since required temperature characteristics.
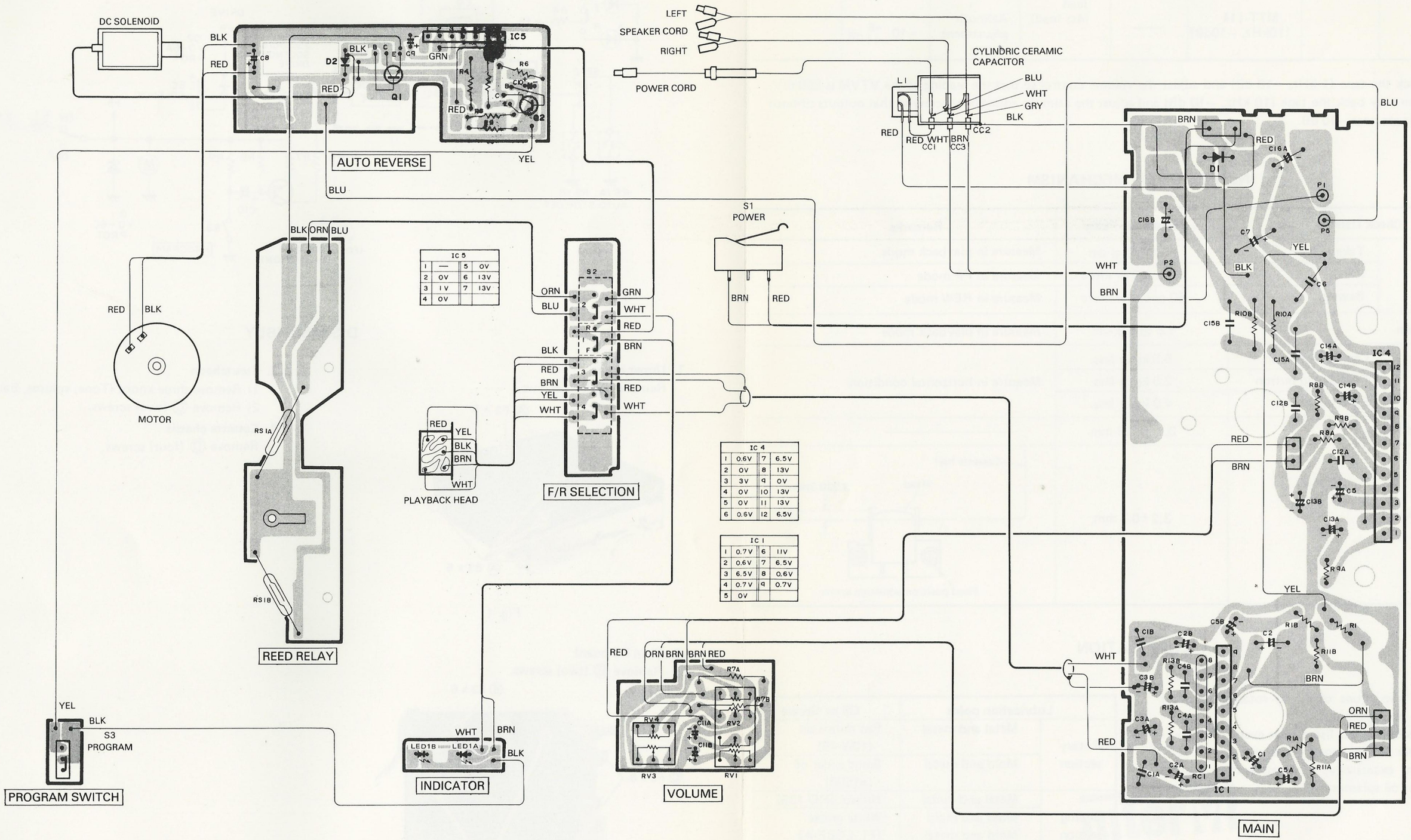
CIRCUIT BOARD DIAGRAM