PHILIPS Service notes

Details of Modules incorporating SILICON Transistors

Including Requirements for Replacement of Germanium-Transistorised Modules

MINI-MODULES—TYPES UA41 (Audio) UF31, UF41 (RF-IF)

Mini-modules in the UA and UF series which were originally designed around germanium transistors, are being superseded by modules employing silicon transistors. The circuit diagrams, test and alignment instructions and parts lists for these modules and the procedures for the replacement of a germanium module by an equivalent silicon type in existing equipments, are described in this service manual.

The Module Index on the last sheet indicates the modules employed in various equipments and their appropriate replacements. (Note: Not all the germanium modules have silicon equivalents at present. Data in respect of these items will be issued in supplementary form as the modules become available). Audio modules other than the UA4 series are not in the mini-module range and are outside the scope of this manual. Relevant information on these modules is contained in the manual for the particular equipment in which they are employed.

All types of module are identified by two letters and three digits. The two letters and the first digit are etched in the copper foil of the printed wiring board, i.e. UF3, UF4, UA4. The three digits are indicated by paint spots on one end of each module, colour-coded in accordance with the international colour-code, the first digit repeating the number etched on the P.W. board e.g. a module with UF3 etched in the foil, and colour-coded orange-black-brown, is type UF301. The spots are read downwards from the top left-hand corner of the module, viewed from the component side. The type of transistor used in the module is indicated by the second (middle) digit, 0 signifying germanium and 1 silicon.

The physical dimensions of all modules of interchangeable types are identical, but the wiring connections to them are not: additional, or different-valued, external components may also be required. All changes in wiring and components are clearly indicated in the appropriate drawings contained either in this manual or in the supplementary sheet for the model.

The silicon modules are generally more sensitive than the equivalent germanium types and more care should be exercised in alignment. All externally connected test components must be mounted within 1.5 inches of the terminal strips.

AUDIO MODULE TESTING AND ALIGNMENT

UA 411

For the testing and alignment of this module the following conditions shall apply.
D.C. Supply: 9V Reg. applied between B+ and negative.
Earth: Negative D.C. supply line.
Ambient temperature: 75°F.
Speaker or dummy output load impedance: 15E ± 10%.
Dummy D.C. load impedance for B line: 1K5 ± 10%.
Input dummy: 10K ± 10%.

B. Voltage: Voltage across 1K5 D.C. dummy load impedance shall be 7.8V ± 0.3V.

Quiescent Current Adjustment

Adjust the quiescent current in the complementary pair of output transistors by means of R108 in accordance with table. Tolerance ± 10%.

Ambient Temp. (°F)	50	55	60	65	70	75	80	85	90	95	100	105	110	115
Collector Current (mA)	6.5	6.6	6.7	6.8	6.9	7.0	7.1	7.2	7.3	7.4	7.5	7.6	7.7	7.8
Total Current (mA)	16.7	17.0	17.2	17.4	17.6	17.9	18.1	18.3	18.5	18.8	19.0	19.2	19.4	19.7

UA 412

For the testing and alignment of this module the following conditions shall apply.
D.C. Supply: 14.4V Reg. applied between B+ and negative.
Earth: Negative D.C. supply line.
Speaker or dummy output load impedance: 15E ± 10%.
Dummy D.C. load impedance for B line: 1K5 ± 10%.
Dummy Value R103: 680E ± 5%.
Input dummy: 10K ± 10%.

Quiescent Current Adjustment

Adjust the quiescent current in the complementary pair of output transistors by means of R108 in accordance with the table below. Total current under no signal conditions will be between the limits set out below.

NOTE: R108 is a fixed resistor (120E) in early modules. It should be replaced by a 220E preset pot. type E086.AC/220E for easier adjustment of the quiescent current.

Ambient Temp. (°F)	50	60	70	80	90	100	110
Collector Current (mA)	3.0	3.6	4.1	4.6	5.3	6.3	8.1
Total Current (mA)	17.0	17.6	18.1	18.6	19.3	20.3	22.1

RF-IF MODULE ALIGNMENT AND CIRCUIT CHANGES

I.F. ALIGNMENT FREQUENCIES

UF311. Alignment (Generator and V.T.V.M.)
In this order
1. IFT.2 Peak at 457.0 KHz
2. IFT.1 Peak at 453.3 KHz
3. IFT.3 Peak at 457.5 KHz

UF312. Alignment (Generator and V.T.V.M.)
In this order
1. IFT.3 Peak at 453.5 KHz
2. IFT.2 Peak at 455.0 KHz
3. IFT.1 Peak at 456.5 KHz

UF313. Alignment (Generator and V.T.V.M.)
In this order
1. IFT.2 Peak at 457.0 KHz
2. IFT.1 Peak at 453.3 KHz
3. IFT.3 Peak at 457.5 KHz

UF411-UF412. Alignment (Generator and V.T.V.M.)
1. Peak all IFT's at 454 KHz. Repeat.
2. Re-peak IFT.1 Secondary at 458 KHz.
3. Re-peak Detector Coil at 460 KHz.

UF415. Alignment (Generator and V.T.V.M.)
1. Peak all IFT's at 453 KHz. Repeat.
2. Re-peak IFT.2 Secondary at 456 KHz.

Note: Test components for IF alignment of germanium modules (UF30 and UF40 series) are shown on the opposite page. Alignment frequencies, etc., are given in the manual for the equipment in which the module is used.

CIRCUIT ADJUSTMENT AFTER MODULE REPLACEMENT

AT2, AT3	No silicon-transistor module replacement for UF405 RF-IF module.
MM2	Refer drawing—Details of Module Replacement MM2-MM2/01—this manual.
MT10	Refer drawing—Details of Module Replacement MT10—this manual.
PA4, PA4/01	Refer supplementary sheet PA4, August 1968.
PP3, PP3/01	Refer drawing—Details of Module Replacement PP3-PP3/01—this manual.
PS6, PS6/01	Refer supplementary sheet PS6-PS6/01, August 1968.
RF11	Refer drawing—Details of Module Replacement RF11-RF11/01—this manual.
RF670	Refer drawing—Details of Module Replacement RF670—this manual.
RF770	Refer drawing—Details of Module Replacement RF770—this manual.
11630	No silicon-transistor module replacement for UF404 RF-IF module.

Information re module replacement procedures for other models will be released later in the form of supplementary sheets for the models concerned.

DETAILS OF MODULE REPLACEMENT RF670

The diagrams below indicate differences in connections when replacing a UF303 module with a UF313. These differences are due to the basic change from (Ge) PNP to (Si) NPN transistors.

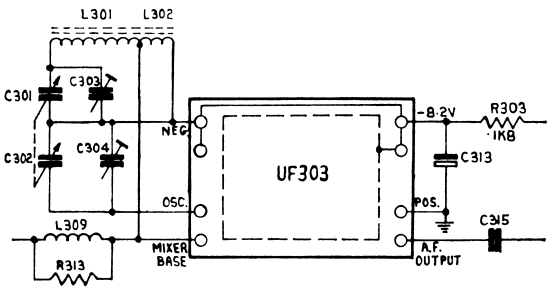

Modules viewed from component side

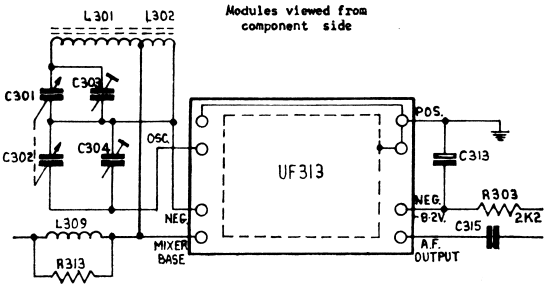

NOTE. 1. Ensure that link is present between can and positive.

2. R303 changes in value due to different current drain.

DETAILS OF MODULE REPLACEMENT RF770

The diagrams below indicate differences in connections when replacing a UF303 module with a UF313. These differences are due to the basic change from (Ge) PNP to (Si) NPN transistors.

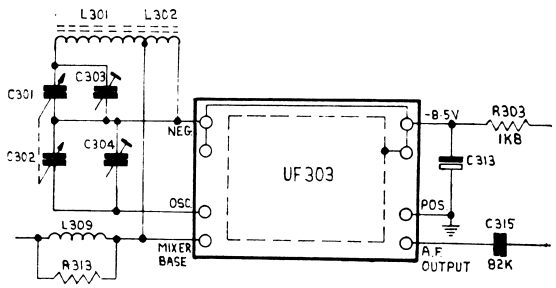

Modules viewed from component side

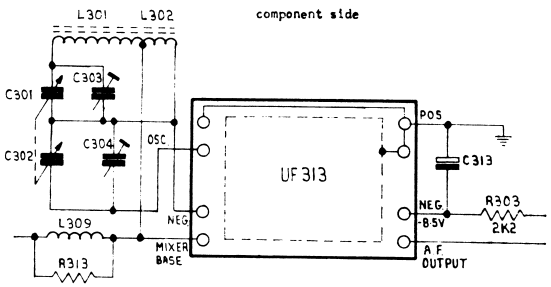

Note: 1. Ensure that link is present between can and positive.

2. R303 changes in value due to different current drain.

3. 82K polyester capacitor should be removed from output lead.

DETAILS OF MODULE REPLACEMENT MT/10.

The diagrams below indicate differences in connections when replacing a UF302 module with a UF312. These differences are due to the basic change from (Ge) PNP to (Si) NPN transistors.

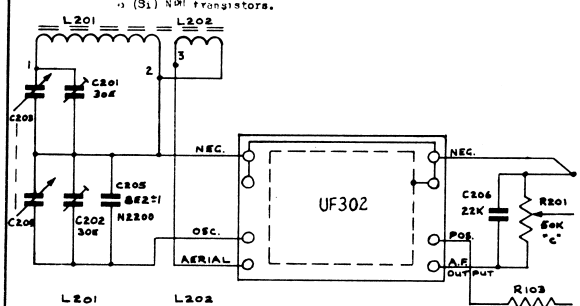

Modules viewed from component side

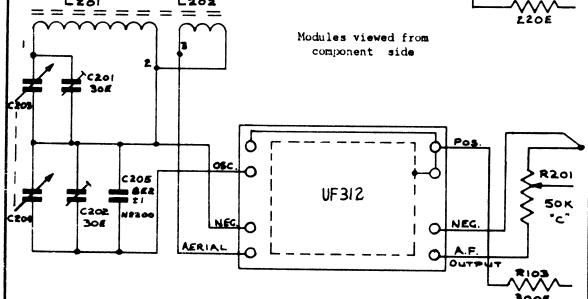

N.B. Ensure that link is present between can and positive.

DETAILS OF MODULE REPLACEMENT RF11-RF11/01

The diagrams below indicate differences in connections when replacing a UF303 module with a UF313. These differences are due to the basic change from (Ge) PNP to (Si)NPN transistors.

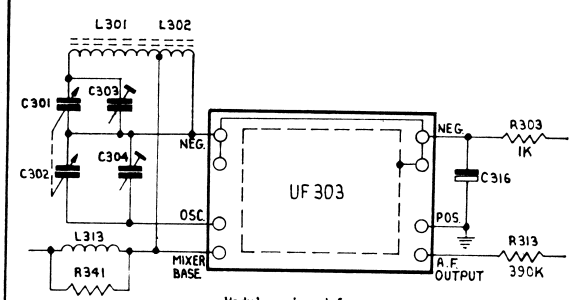

Modules viewed from component side

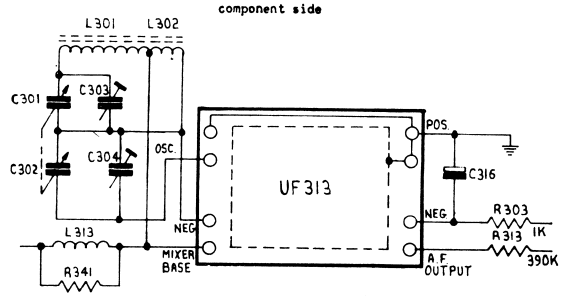

Note: Ensure that link is present between can and positive.

H&H

PHILIPS ELECTRICAL PTY. LTD.

DIAGRAM CODE CS 438·614·3 | UNIT MODEL UF 411 412 | CIRCUIT CODE 07/321·3

COMP.	ZONE	COMP.	ZONE	COMP.	ZONE	COMP.	ZONE
R1	2D	—	—	C17	11D	L14	9D
R2	2E	—	—	C18	12D	—	—
R3	3B	C1	2E	C19	13C	L16	10C
R4	3B	C2	2B	—	—	L17	10D
R5	4D	C3	3C	—	—	L18	10D
R6	4E	C4	3E	L1	1C	—	—
R7	5A	C5	4C	L2	1D	—	—
R8	5E	C6	5C	L3	1E	TR1	2D
R9	6B	C7	6E	L4	4C	TR2	4C
R10	7E	C8	7A	L5	4D	TR3	7C
R11	—	C9	7C	L6	4D	TR4	10C
R12	9A	C10	8E	L7	6C	—	—
R13	10E	C11	—	L8	6D	—	—
R14	10E	C12	8C	—	—	D1	11C
R15	—	C13	9E	L10	8C	D2	6B
R16	12C	C14	9A	L11	8D	—	—
R17	—	C15	10A	L12	8D	—	—
R18	12E	C16	10C	L13	9C	—	—

NOTES:- ALL VOLTAGES TO BE MEASURED WITH V.T.V.M. POSSESSING HIGH INPUT RESISTANCE, (RELATIVE TO NEGATIVE.)

TOLERANCES: P1,P2 ± ·3V, P3,P4 ± ·7V, P5: ± ·1V P6,P7: ± ·2V, P8,P9: ± ·4V, P10,P11: ± ·01V, P12: ± ·2V

POINT	ZONE	UNIT	MODEL APPLICATION UF411	MODEL APPLICATION UF412
P12	13A	7·8	7·8	
P11	12E	·16	·16	
P10	12C	·11	·11	
P9	10D	1·3	1·3	
P8	9D	2	2	
P7	7D	·85	·85	
P6	6D	1·55	1·55	
P5	5B	·3	·3	
P4	4D	3·8	3·8	
P3	3C	3·5	3·5	
P2	3D	1·4	1·4	
P1	2D	1·35	1·35	

VOLTAGES

R: ± 10 %

C: CER. BYPASS COND. +80 % -20 %

TOLERANCES

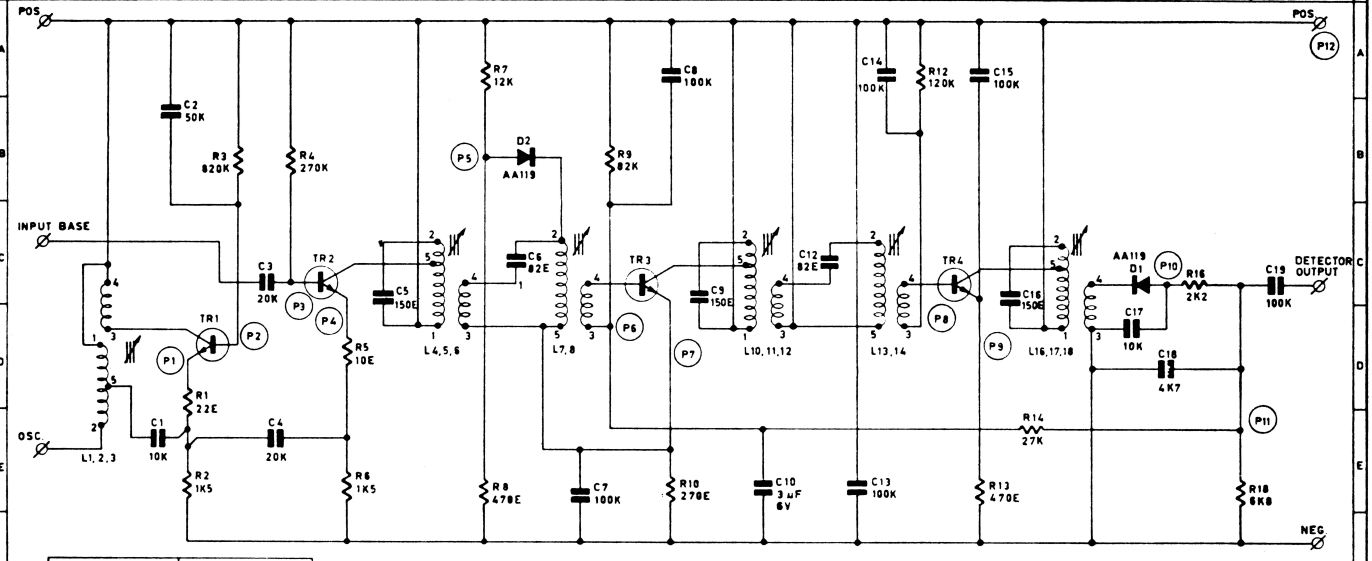

TR1 :	BF185 OR BF195	TR2 :	BF184 OR BF194
TR3 :	BF184 OR BF194	TR4 :	BF185 OR BF195

"UF411 & UF412 ARE IDENTICAL WITH THE EXCEPTION OF THE OSCILLATOR COIL L1, 2, 3."

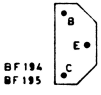

BF194
BF195

BOTTOM VIEW

BF184
BF185

"S" CONNECTED TO CASE

OSC. COIL & I.F.T. CONNECTIONS

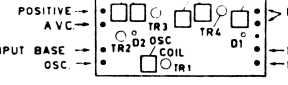

VIEW FROM COMPONENT SIDE OF BOARD

ELECTRICAL PARTS LIST

UF311, UF312, UF313

C. No.	DESCRIPTION	V.W. or W.	TOL.±%	TYPE or CODE No.
L1, 2, 3	Oscillator Coil (UF312, UF313)			CZ.652.007
L1, 2, 3	Oscillator Coil (UF311)			CZ.652.011
L4, 5	1st I.F. Transformer			CZ.651.004.1
L7, 8, 9.	2nd I.F. Transformer			CZ.651.010
L10, 11, 12	3rd I.F. Transformer			CZ.651.009
TR1	Transistor			BF194
TR2	Transistor			BF195
TR3	Transistor			BF195
D1	Detector Diode			AA119
D2	Overload Diode			AA119
C1	100K Ceramic	12	+80-20	CZ.097.922.MJ
C2	360E Styroflex (Except UF311)		±2	C.285.AA/S360E
C3	20K Ceramic	25	+80-20	Ducon CDR 22K-A
C4	3K6 Styroflex		±5	C.285.AA/B3K6
C5	50K Ceramic	25	+80-20	Ducon CDR 47K-B
C6	50K Ceramic	12	+80-20	CZ.097.921.MJ
C7	150E Ceramic			Part of 2nd IFT
C8	50K Ceramic	12	+80-20	CZ.097.921.MJ
C9	50K Ceramic	25	+80-20	Ducon CDR 47K-B
C10	50K Ceramic	25	+80-20	Ducon CDR 47K-B
C11	50K Ceramic	12	+80-20	CZ.097.921.MJ
C12	150E Ceramic			Part of 3rd IFT
C13	2M5 Electrolytic	16		C.426.AS/E2.5
C14	5K Ceramic	25	+80-20	Ducon CDR 4K7-F
C15	5K Ceramic	25	+80-20	Ducon CDR 4K7-F
C16	100K Ceramic	12	+80-20	CZ.097.922.MJ
C17	100K Ceramic	12	+80-20	CZ.097.922.MJ
R1	22E Carbon	½	10	B8.305.05A/22E
R2	1K8 Carbon	½	10	B8.305.05A/1K8
R3	680K Carbon	½	10	B8.305.05A/680K
R5	680E Carbon	½	10	B8.305.05A/680E
R6	150K Carbon	½	10	B8.305.05A/150K
R7	1K Carbon	½	10	B8.305.05A/1K
R8	1K Carbon	½	10	B8.305.05A/1K
R9	1K Carbon	½	10	B8.305.05A/1K
R10	270K Carbon	½	10	B8.305.05A/270K
R10	220K Carbon	½	10	B8.305.05A/220K
R12	470E Carbon	½	10	B8.305.05A/470E
R13	82K Carbon	½	10	B8.305.05A/82K
R14	3K3 Carbon	½	10	B8.305.05A/3K3
R15	10K Carbon	½	10	B8.305.05A/10K
R16	39K Carbon	½	10	B8.305.05A/39K

UF411, UF412

C. No.	DESCRIPTION	V.W. or W.	TOL.±%	TYPE or CODE No.
L1, 2, 3	Oscillator Coil (UF411)			CZ.652.009
L1, 2, 3	Oscillator Coil (UF412)			CZ.652.010
L4, 5, 6	1st I.F.T. Primary			CZ.651.008
L7, 8, 9	1st I.F.T. Secondary			CZ.651.001.1
L10, 11, 12	2nd I.F.T. Primary			CZ.651.002.1
L13, 14, 15	2nd I.F.T. Secondary			CZ.651.001.1
L16, 17, 18	Detector Coil			CZ.651.017
TR1	Transistor			BF195
TR2	Transistor			BF194
TR3	Transistor			BF194
TR4	Transistor			BF195
D1	Detector Diode			AA119
D2	Overload Diode			AA119
C1	10K Ceramic	50	+80-20	CZ.097.575.MJ
C2	50K Ceramic	25	+80-20	Ducon CDR 47K-B
C3	20K Ceramic	25	+80-20	Ducon CDR 22K-A
C4	20K Ceramic	25	+80-20	Ducon CDR 22K-A
C5	150E Ceramic			Part of L4, 5, 6
C6	82E Ceramic			Part of L7, 8
C7	100K Ceramic	12	+80-20	CZ.097.922.MJ
C8	100K Ceramic	12	+80-20	CZ.097.922.MJ
C9	150E Ceramic			Part of L10, 11, 12
C10	3M Tantalum	6		C.426.AS/E2.5
C12	82E Ceramic			Part of L13, 14
C13	100K Ceramic	12	+80-20	CZ.097.922.MJ
C14	100K Ceramic	12	+80-20	CZ.097.922.MJ
C15	100K Ceramic	12	+80-20	CZ.097.922.MJ
C16	150E Ceramic			Part of L16, 17, 18
C17	10K Ceramic	25	+80-20	Ducon CDR 10K-A
C18	4K7 Ceramic	25	+80-20	Ducon CDR 4K7-F
C19	100K Ceramic	12	+80-20	CZ.097.922.MJ
R1	22E Carbon	½	10	B8.305.05A/22E
R2	1K5 Carbon	½	10	B8.305.05A/1K5
R3	820K Carbon	¼	5	B8.305.04B/820K
R4	270K Carbon	½	10	B8.305.05A/270K
R5	10E Carbon	½	10	B8.305.05A/10E
R6	1K5 Carbon	½	10	B8.305.05A/1K5
R7	12K Carbon	½	10	B8.305.05A/12K
R8	470E Carbon	½	10	B8.305.05A/470E
R9	82K Carbon	½	10	B8.305.05A/82K
R10	270E Carbon	½	10	B8.305.05A/270E
R12	120K Carbon	½	10	B8.305.05A/120K
R13	470E Carbon	½	10	B8.305.05A/470E
R14	27K Carbon	½	10	B8.305.05A/27K
R16	2K2 Carbon	½	10	B8.305.05A/2K2
R18	6K8 Carbon	½	10	B8.305.05A/6K8

UF415

C. No.	DESCRIPTION	V.W. or W.	TOL.±%	TYPE or CODE No.
L1, 2, 3	Oscillator Coil			CZ.652.004
L4, 5, 6	1st I.F.T. Primary			CZ.651.010
L7, 8, 9	1st I.F.T. Secondary			CZ.651.001.1
L10, 11, 12	2nd I.F.T. Primary			CZ.651.002.1
L13, 14, 15	2nd I.F.T. Secondary			CZ.651.001.1
L16, 17, 18	Detector Coil			CZ.651.017
TR1	Transistor			BF194
TR2	Transistor			BF194
TR3	Transistor			BF195
TR4	Transistor			BF195
D1	Detector Diode			AA119
C1	20K Ceramic	25	+80-20	Ducon CDR 22K-A
C2	50K Ceramic	25	+80-20	Ducon CDR 47K-B
C3	20K Ceramic	25	+80-20	Ducon CDR 22K-A
C4	20K Ceramic	25	+80-20	Ducon CDR 22K-A
C5	150E Ceramic			Part of L4, 5, 6
C6	82E Ceramic			Part of L7, 8, 9
C7	100K Ceramic	12	+80-20	CZ.097.922.MJ
C8	100K Ceramic	12	+80-20	CZ.097.922.MJ
C9	150E Ceramic			Part of L10, L11, 12
C10	3M Tantalum	6		C.426.AS/E2.5
C12	82E Ceramic			Part of L13, 14, 15
C13	100K Ceramic	12	+80-20	CZ.097.922.MJ
C14	100K Ceramic	12	+80-20	CZ.097.922.MJ
C16	150E Ceramic			Part of L16, 17, 18
C17	10K Ceramic	25	+80-20	Ducon CDR 10K-A
C18	22K Ceramic	25	+80-20	Ducon CDR 22K-A
C19	10M Electrolytic	16	−50+10	C.426.AR/E10
R1	10E Carbon	½	10	B8.305.05A/10E
R2	1K5 Carbon	½	10	B8.305.05A/1K5
R3	470K Carbon	½	10	B8.305.05A/470K
R4	390K Carbon	½	10	B8.305.05A/390K
R5	10E Carbon	½	10	B8.305.05A/10E
R6	3K3 Carbon	½	10	B8.305.05A/3K3
R9	47K Carbon	½	10	B8.305.05A/47K
R10	560E Carbon	½	10	B8.305.05A/560E
R12	120K Carbon	½	10	B8.305.05A/120K
R14	15K Carbon	½	10	B8.305.05A/15K
R15	1K2 Carbon	½	10	B8.305.05A/1K2
R16	560E Carbon	½	10	B8.305.05A/560E
R18	22K Carbon	½	10	B8.305.05A/22K
R19	680E Carbon	½	10	B8.305.05A/680E

FIRST ANGLE PROJECTION

MODULE INDEX

	PRE-AMP MODULES			AUDIO MODULES														RF. IF. MODULES											
	MICROPHONE		CHANGER	UA401	UA402	UA403	UA404	UA405	UA411	UA412	UA501	UA502	UA503	UA504	UA505	UA601	UA611	UA407	UF301	UF302	UF303	UF311	UF312	UF313	UF401	UF402	UF404	UF405	UF411	UF412	UF415
AT2									R								X									X					
AT3									R								X									X					
GF370										X																					
GF470										X																					
GF570												X																			
GF580														X																	
MM2							X		R									X			R										
MM2/01									X												X										
MT9					X				R										X												
MT10					X				R										X			R									
MT10/02									X													X									
PA3				X					R															X			R				
PA4							X																		X				R		
PA4/01							X																		X				R		
PP3					X				R															X			R				
PP3/01									X															X			R				
PS6						X			R										X			R									
PS6/01									X										X			R									
RF11														X						X			R								
RF580												X										X									
RF670											X									X			R								
RF770	X	X											X							X			R								
RH570										X									X			R									
RL270									X													X									
RN480																														X	
RN580																														X	
AT2/01																														X	
RF11/01														X									X								
11630														X											X						

X DENOTES 2 MODULES

R DENOTES REPLACEMENT MODULE

CODE

COLOUR	Nº
BLACK	0
BROWN	1
RED	2
ORANGE	3
YELLOW	4
GREEN	5
BLUE	6
VIOLET	7
GREY	8
WHITE	9

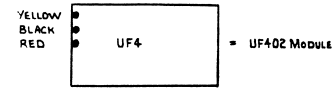

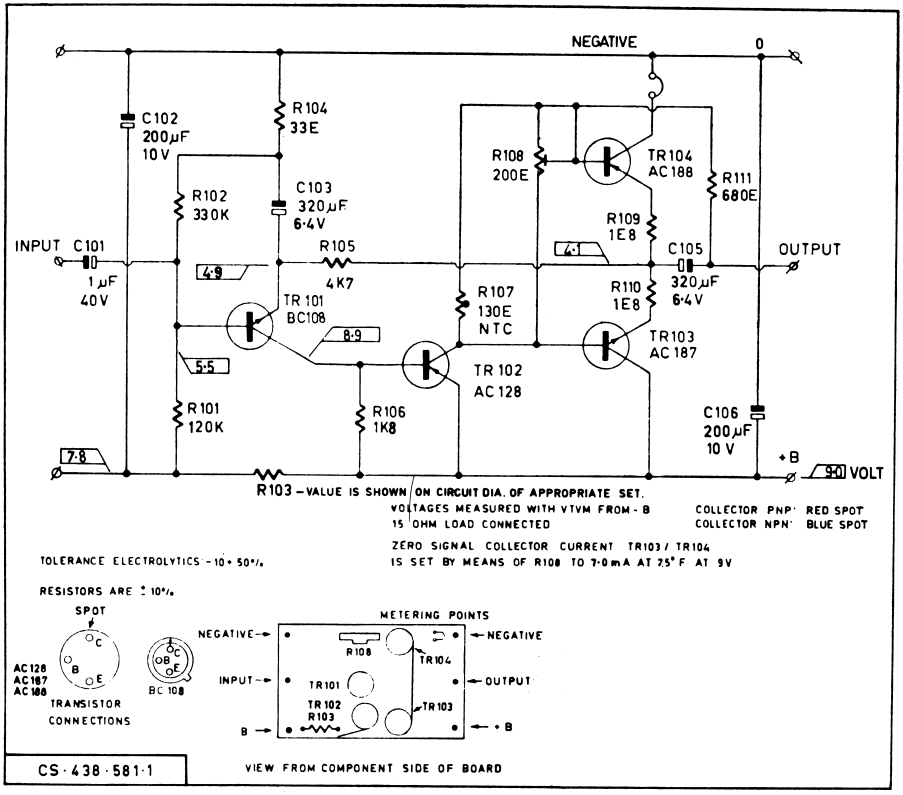

ELECTRICAL PARTS LIST

UA411

C. No.	DESCRIPTION	V.W. or W.	TOL.±%	TYPE or CODE No.
R 101	120K Carbon	½	10	B8.305.05A/120K
R 102	330K Carbon	½	10	B8.305.05A/330K
R 104	33E Carbon	½	10	B8.305.05A/33E
R 105	4K7 Carbon	½	10	B8.305.05A/4K7
R 106	1K8 Carbon	½	10	B8.305.05A/1K8
R 107	130E NTC Disc		10	E.201.BC/A130E
R 108	220E Carbon Pot. Preset Bias Adj.			E.086.AC/220E
R 109	1E8 Carbon	¼	10	B8.305.04A/1E8
R 110	1E8 Carbon	¼	10	B8.305.04A/1E8
R 111	680E Carbon	½	10	B8.305.05A/680E
C 101	1M Electrolytic	40		C.426.AR/G1
C 102	200M Electrolytic	10		C.426.AR/D200
C 103	320M Electrolytic	6.4		C.426.AR/C320
C 105	320M Electrolytic	6.4		C.426.AR/C320
C 106	200M Electrolytic	10		C.426.AR/D200
TR 101	BC.148			Substitute BC.108
TR 102	AC.128			
TR 103	AC.187 } Matched pairs			
TR 104	AC.188 }			

UA-UF MODULES

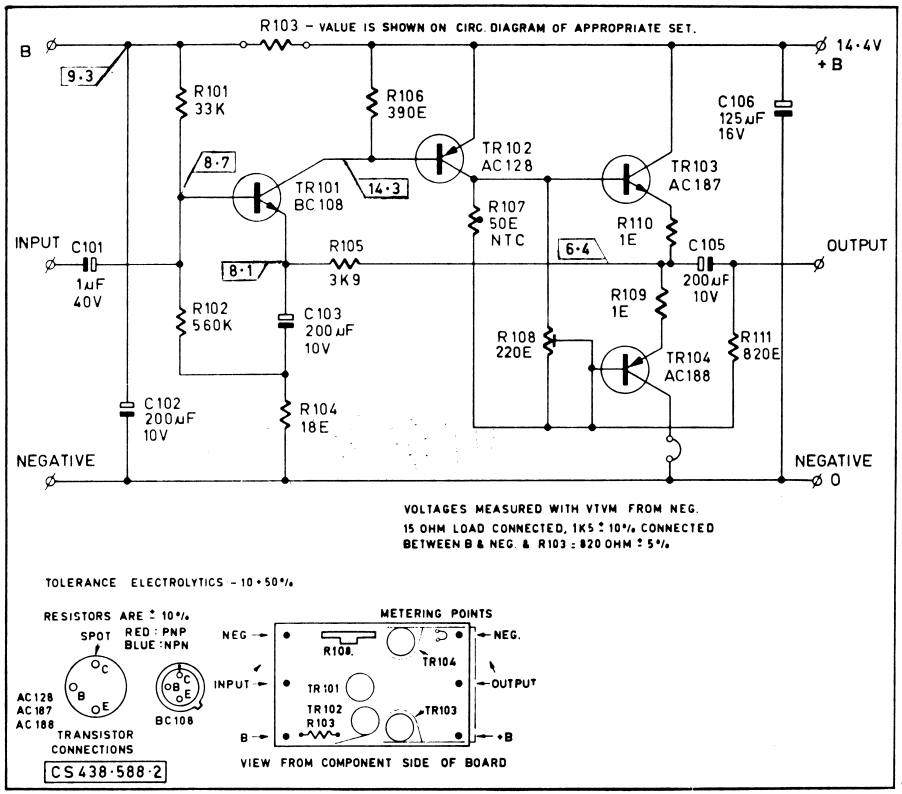

ELECTRICAL PARTS LIST

UA412

C. No.	DESCRIPTION	V.W. or W.	TOL.±%	TYPE or CODE No.
R 101	33K Carbon	½	10	B8.305.05A/33K
R 102	560K Carbon	½	5	B8.305.05B/560K
R 104	18E Carbon	½	10	B8.305.05A/18E
R 105	3K9 Carbon	½	10	B8.305.05A/3K9
R 106	390E Carbon	½	10	B8.305.05A/390E
R 107	50E NTC Disc			E.201.BC/A50E
R 108	220E Carbon Pot Preset Bias Adj.			E.086.AC/220E
R 109	1E Carbon	¼	10	B8.305.04A/1E
R 110	1E Carbon	¼	10	B8.305.04A/1E
R 111	820E Carbon	½	10	B8.305.05A/820E
C 101	1M Electrolytic	40		C.426.AR/G1
C 102	200M Electrolytic	10		C.426.AR/D200
C 103	200M Electrolytic	10		C.426.AR/D200
C 105	200M Electrolytic	10		C.426.AR/D200
C 106	125M Electrolytic	16		C.426.AR/E125
TR 101	BC.148			Substitute BC.108
TR 102	AC.128			
TR 103	AC.187 } Matched pairs			
TR 104	AC.188 }			

UA-UF MODULES

PHILIPS ELECTRICAL PTY LTD.

DIAGRAM CODE: CS438-582-4

UNIT MODEL: UF311, 312, 313

CIRCUIT CODE: 07/316-4

COMPONENT LOCATION

COMP.	ZONE	COMP.	ZONE	COMP.	ZONE	COMP.	ZONE
R1	2C			C15	11C	L11	9C
R2	2D			C16	11B	L12	9C
R3	3A	C1	1B	C17	12C		
		C2	1C				
R5	4A	C3	2D				
R6	5A	C4	4C			TR1	3C
R7	5B	C5	4D	L1	2C	TR2	5C
R8	5D	C6	5C	L2	2D	TR3	8C
R9	6A	C7	6C	L3	2D		
R10	7A	C8	6C				
		C9	6A	L5	4C		
R12	8D	C10	7C	L6	4C	D1	9C
R13	10D	C11	8C	L7	6B	D2	4B
R14	10C	C12	8C	L8	6C		
R15	11D	C13	9D	L9	6C		
R16	6C	C14	9C	L10	9B		

NOTES: IN UF311 C2 IS REPLACED BY A SHORTING LINK.

TOLERANCES ON TABULATED VOLTAGES
P4,5,6 ±·2V, P1 ±·3V, P2 & 3 ±·5V,
P7 & 8 ±·4V, P11 ±·2V, P9 & 10 ±·02V.

POINT	ZONE	UNIT	MT10	RL270	RH570	RF670	RF770	RF1/01	RF590	MM2/01
P11	12A	7·8V	7·8V		8·2V					9·3V
P10	11D	·13V	·13V		·14V					·15V
P9	10C	·1V	·1V		·11V					·12V
P8	8C	·9V	·9V		·95V					1·1V
P7	7C	1·6V	1·6V		1·65V					1·8V
P6	5C	6·6V	6·6V		6·9V					7·7V
P5	5C	1·3V	1·3V		1·4V					1·65V
P4	5C	2V	2V		2·1V					2·35V
P3	3C	2·35V	2·35V		2·45V					2·75V
F2	3C	1·9V	1·9V		2·0V					2·3V
P1	2C	7·1V	7·1V		7·5V					8·5V

MODEL APPLICATION

VOLTAGES

R	±10%
C	+80% -20% UNLESS OTHERWISE STATED.

TOLERANCES

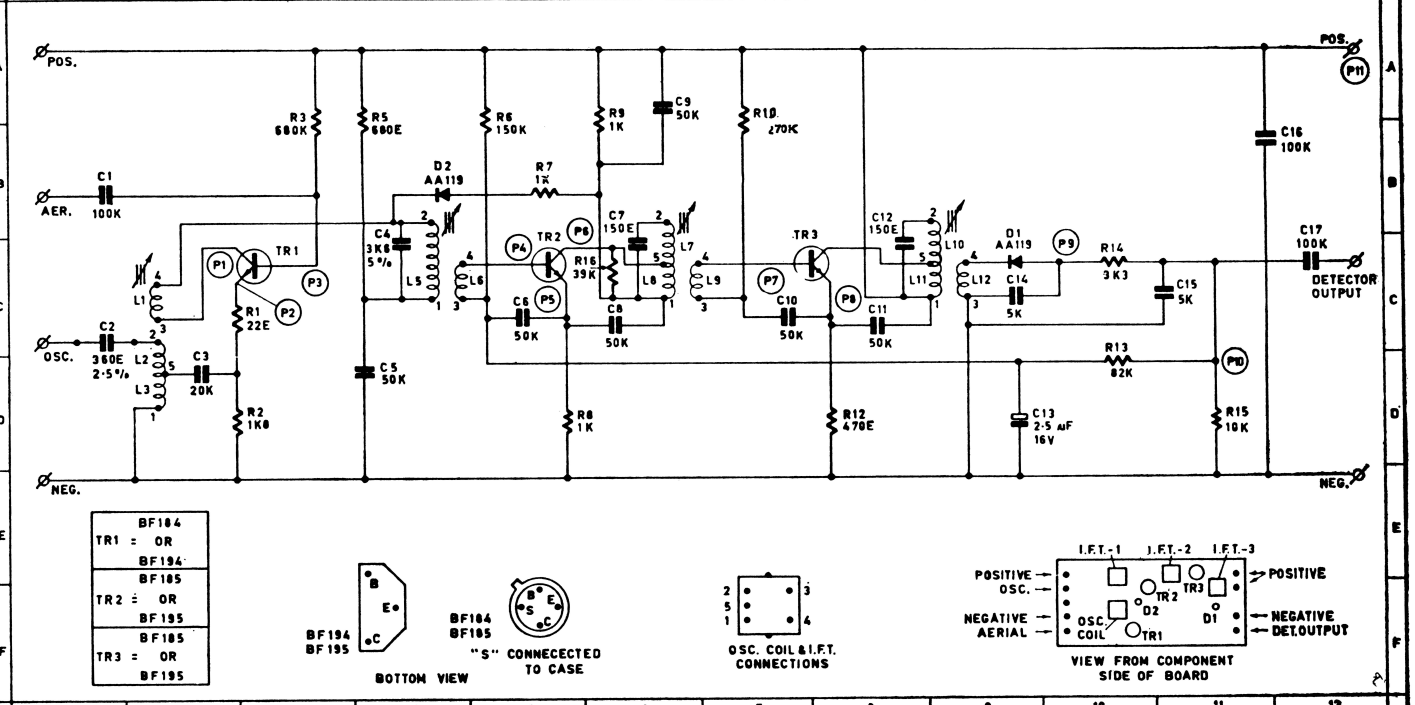

IF MODULE ALIGNMENT COMPONENTS

UF30

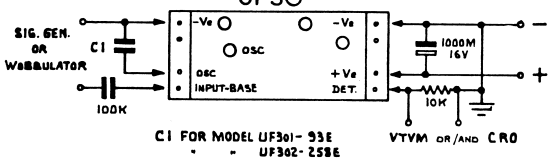

C1 FOR MODEL UF301-93E
" " UF302-258E
" " UF303-258E

UF40

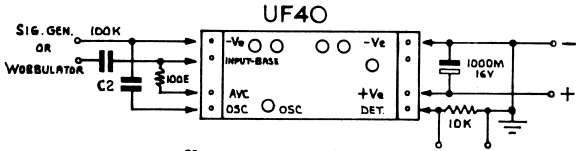

C2 FOR MODEL UF401-93E
" " UF402-122E
" " UF403 } 68E IN PARALLEL WITH
" " UF405 } 490uH COIL

UF404

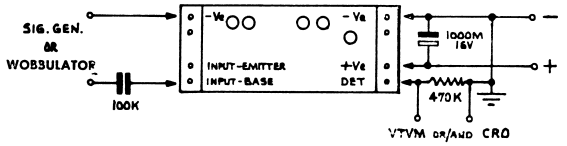

NOTE. ALL COMPONENTS TO BE WITHIN 1·5 INCHES OF TERMINAL STRIPS.

IF MODULE ALIGNMENT COMPONENTS

UF31

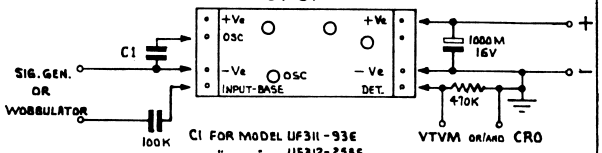

C1 FOR MODEL UF311-93E
" " UF312-258E
" " UF313-258E
FOR 600KHz.OSC.ADJUSTMENT

UF41

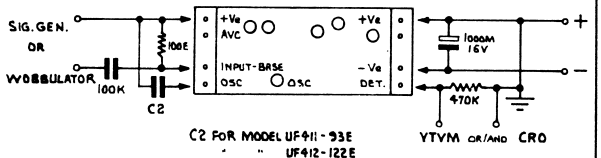

C2 FOR MODEL UF411-93E
" " UF412-122E
" " UF415-68E IN PARALLEL WITH
490uH COIL

NOTE. ALL COMPONENTS TO BE WITHIN 1·5 INCHES OF TERMINAL STRIPS.

DETAILS OF MODULE REPLACEMENT NM2-NM2/01

The diagrams below indicate differences in connections when replacing a UF301 module with a UF311. These differences are due to the basic change from (Ge) PNP to (Si) NPN transistors.

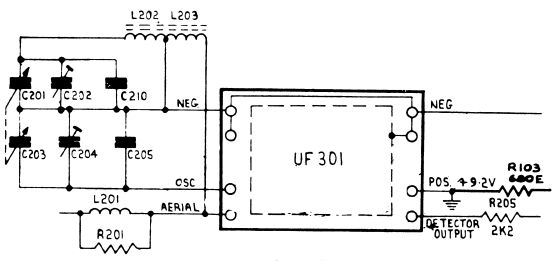

Modules viewed from Component side

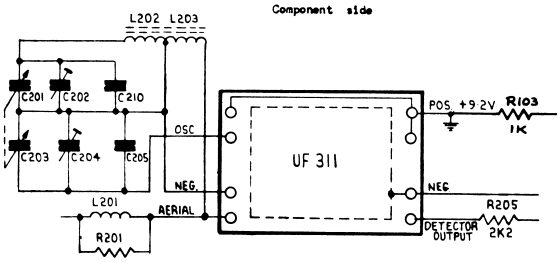

Notes: 1. Ensure that link is present between can and negative.
2. In some sets, C205 is reduced to achieve end of band.
3. R103 is located in the audio module.

DETAILS OF MODULE REPLACEMENT PP3-PP3/01

The diagrams below indicate differences in connections when replacing a UF401 module with a UF411. These differences are due to the basic change from (Ge) PNP to (Si) NPN transistors.

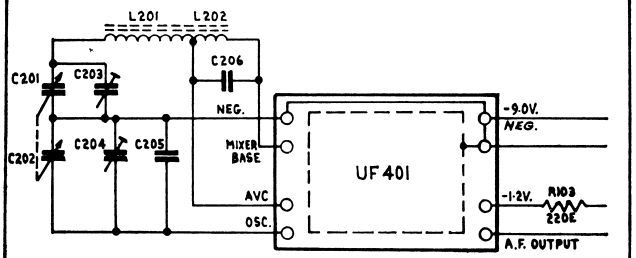

Modules viewed from component side

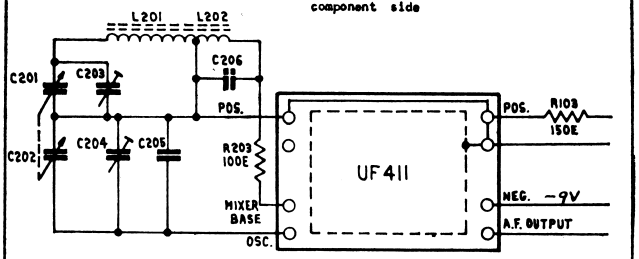

Notes: 1. Ensure that link is present between can and positive.
2. In very sensitive sets it may be necessary to take the following precautions to guard against instability;
(a) add R203 in mixer base lead;
(b) rotate audio module 180°, adjusting leads to suit.
3. R103 is located in audio module.
4. In some sets, C205 is reduced to achieve end of band.