Schematic Diagram

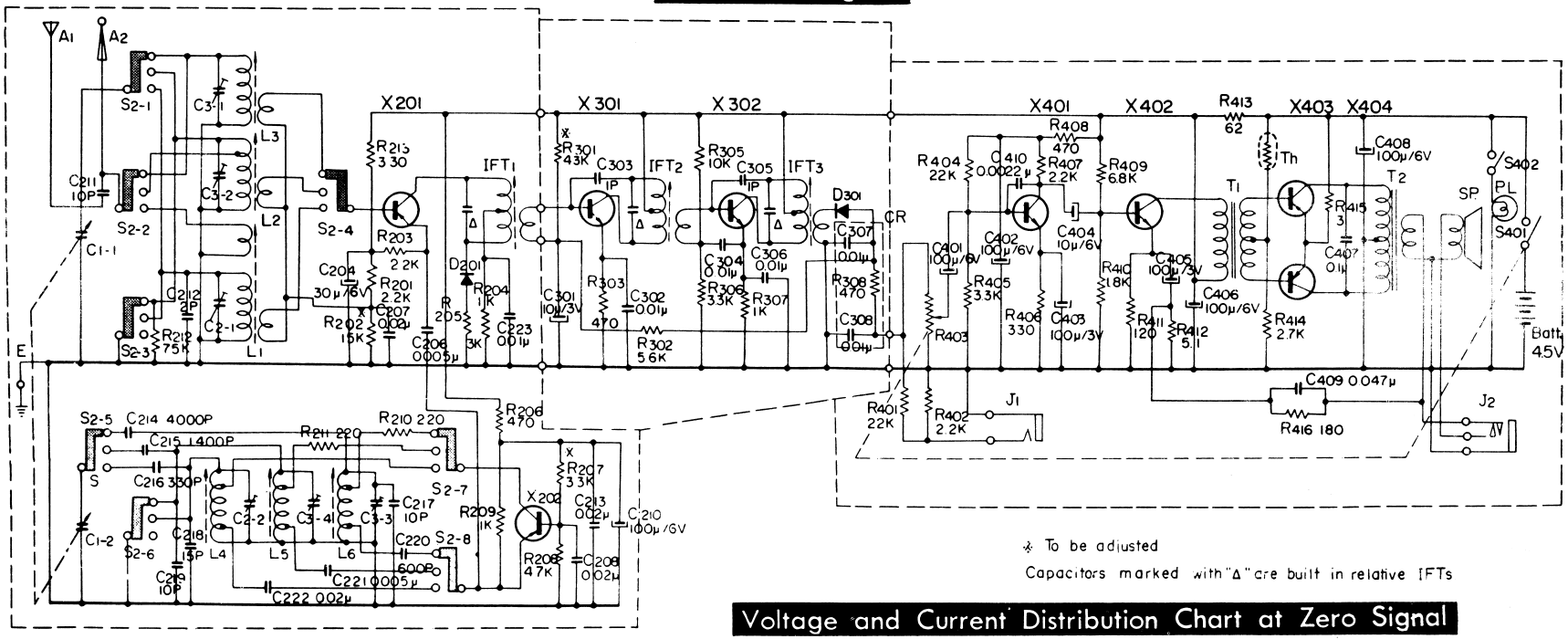

⁂ To be adjusted

Capacitors marked with "Δ" are built in relative IFTs

Voltage and Current Distribution Chart at Zero Signal

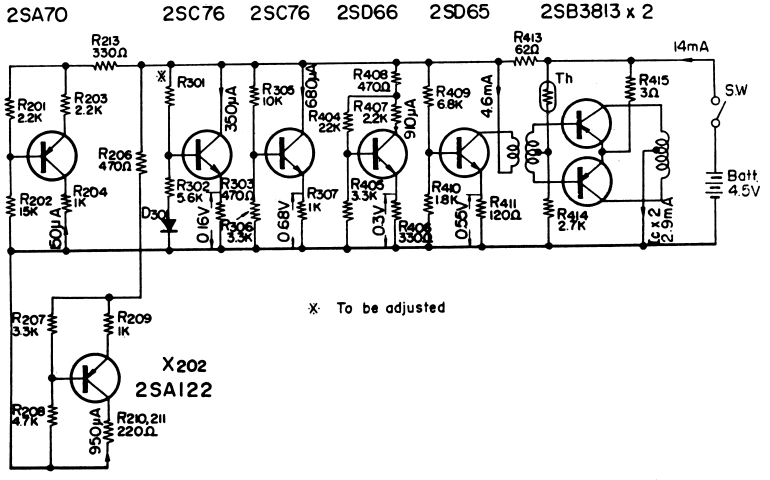

⁂ To be adjusted

Mounting Diagram

—Printed Side—

RF Section

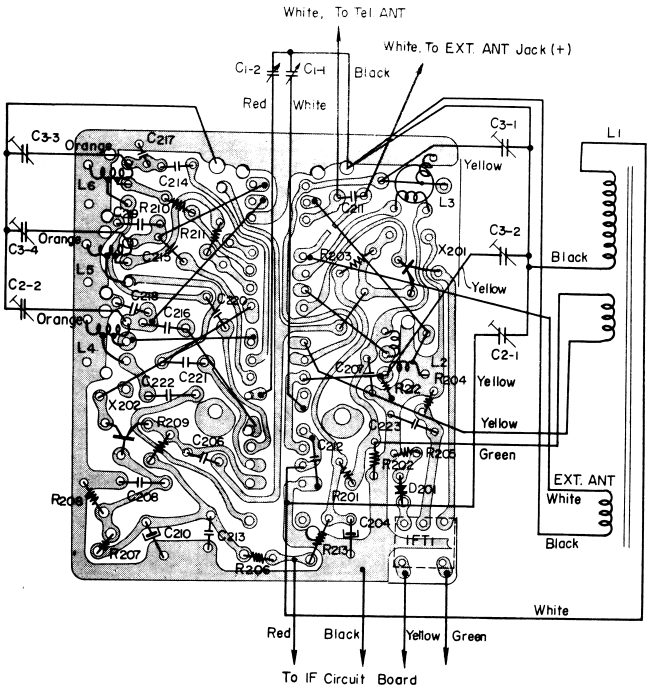

Mounting Diagram

—Parts Side—

RF Section

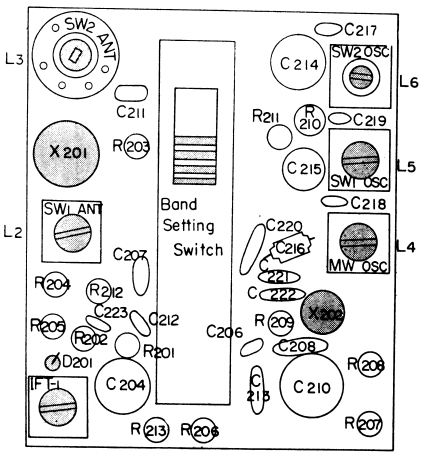

Mounting Diagram

—Printed Side—

IF Section

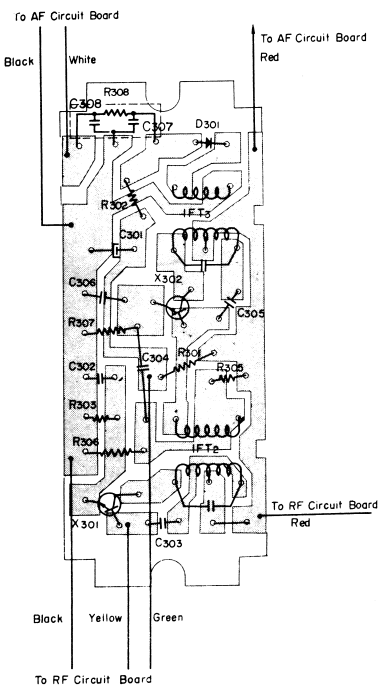

Mounting Diagram

—Printed Side—
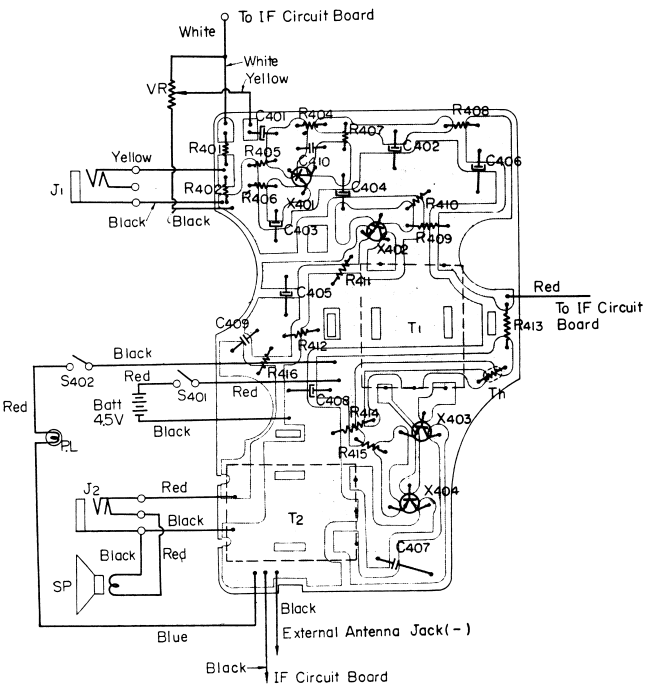
AF Section