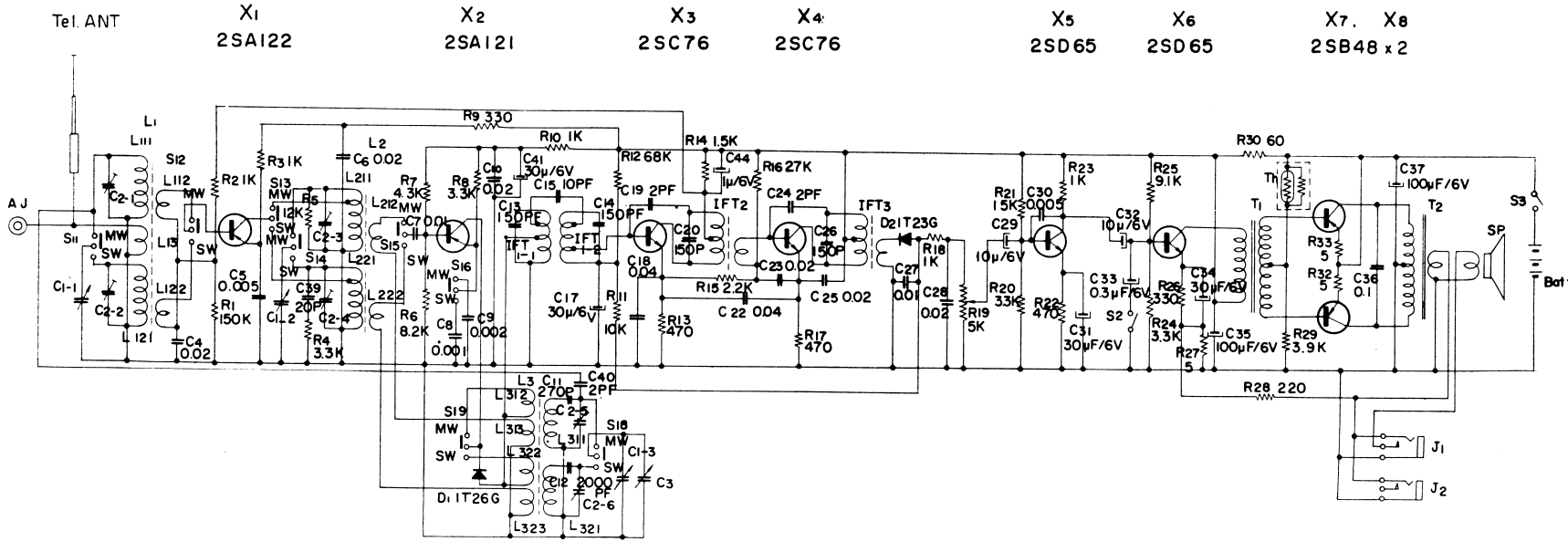

Voltage and Current Distribution Chart at Zero Signal

X1 X2 X3 X4 X5 X6 X7, X8

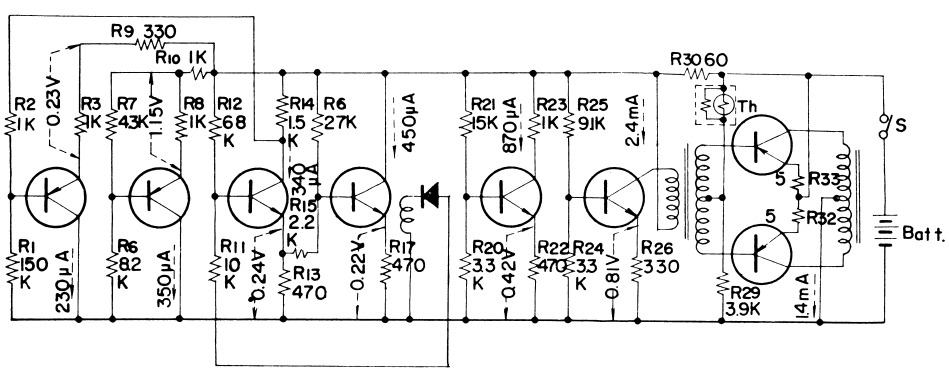

Mounting Diagram

—Printed Side—

SONY TR-823

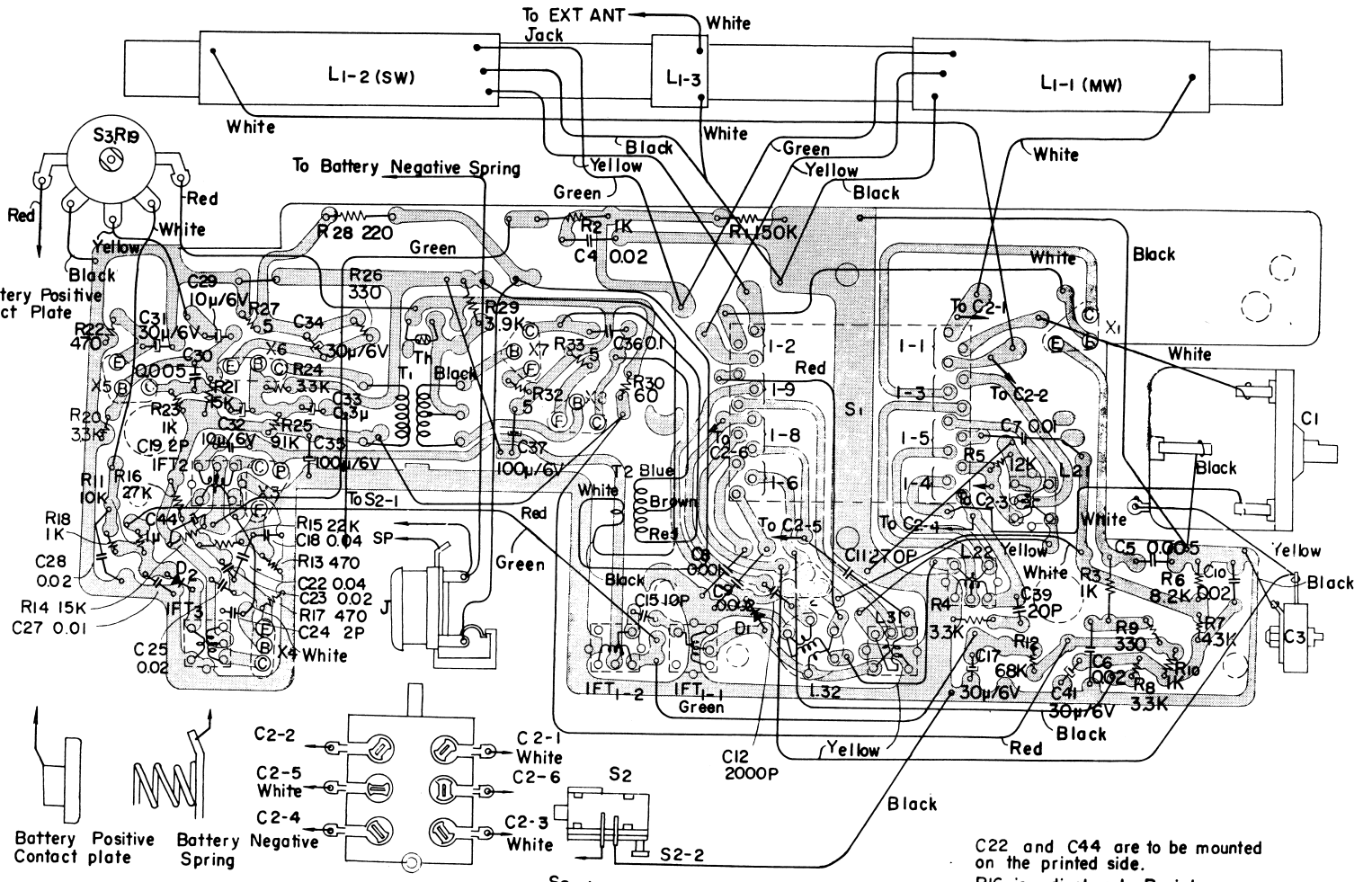

C22 and C44 are to be mounted on the printed side.

R16 is adjustment Resistor