Voltage and current distribution for TR-710 B and TR-710 Y

	Collector current	Collector voltage Volt	Emitter voltge Volt	Voltage between B and E Volt
X_1	350 μA	0	2.2_5	$*0.18_1$
X_2	330 μA	2.7_5	0.16_1	0.15_1
X_3	750 μA	2.7_5	0.1_1	0.2_1
X_4	1.2 mA	2.0_5	0.4_1	0.14_1
X_5	6 mA	2.5_5	0.45_1	0.2_1
$X_{6,7}$	0.75~1.2 mA	0	3.0_5	$*0.14_1$

1. Battery voltage: 3 Volts. Battery current: 14 mA ±20 % at 0 signal.
2. Data show approximate values at 0 signal (the set is not tuned to any station with the volume control set at minimum).
   Measurement was performed with the negative lead of the voltmeter connected to the negative pole of the battery.
3. NPN Transistor: Base is positive with respect to emitter.
   *PNP 〃 : Base is negative with respect to emitter.
4. The internal resistance used for measurement is 20 KV/Ω.
5. Small figure next to the voltage in the list shows the meter range.
6. The collector current of X_1 can be known from the voltage drop across R_3 which will be approx. 0.5 Volt. If big discrepancy is observed, adjust by replacing R_1.
7. To check the collector current of X_2, cut printed circuit between the collector and IFT_2 with a sharp knife and bridge the gap with mili-ammeter. Current adjustment can be made by replacing R_5. After adjustment, the gap should be of couse bridged with the solder.

Mounting diagram of TR-710 B and TR-710 Y (Coil pack printed side)

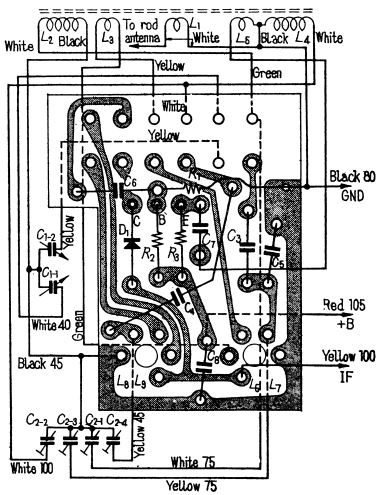

SONY SERVICING GUIDE

TR-710B
TR-710Y

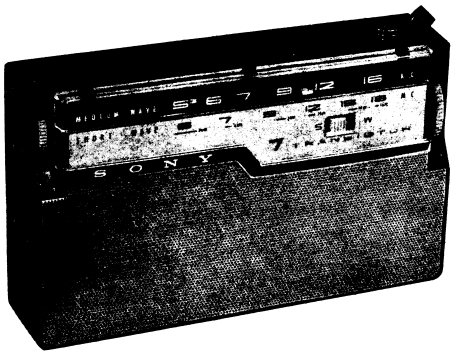

Specifications for TR-710 B and TR-710 Y

Circuit	:	7 transistor superheterodyne
Covering range	:	M.W. 535~1,605 Kc
		S.W. 3.9~12 Mc (TR 710 B), 6~18 Mc (TR 710 Y)
IF frequency	:	455 Kc
10 mW sensitivity	:	M.W.—100 μV/m with built-in bar antanna
		S.W.—200 μV/m 〃 〃
		M.W.—50 μV/m with rod antenna
		S.W.—30 μV/m 〃 〃
		M.W.—10 μV/m with external aerial (Effective height 5 m)
		S.W.—10 μV/m 〃 〃 (〃 〃)
Selectivity	:	18 db (10 Kc off resonance ta 1,400 Kc)
Output power	:	100 mW (non distorted)
Speaker	:	2¼″ PM dynamic speaker (8 Ω)
Battery	:	Two 1.5 V size "C" flashlight batteries
Current drain	:	Approx. 14 mA at 0 signal
Dimensions	:	6″ × 3½″ × 1¼″ (156 × 92 × 38 mm)
Weight	:	Approx. 1 lb. (500 g.)
Color	:	Cream and Brown (TR-710 B), Gray (TR-710 Y)

SONY

CIRCUIT DIAGRAM FOR TR-710-B

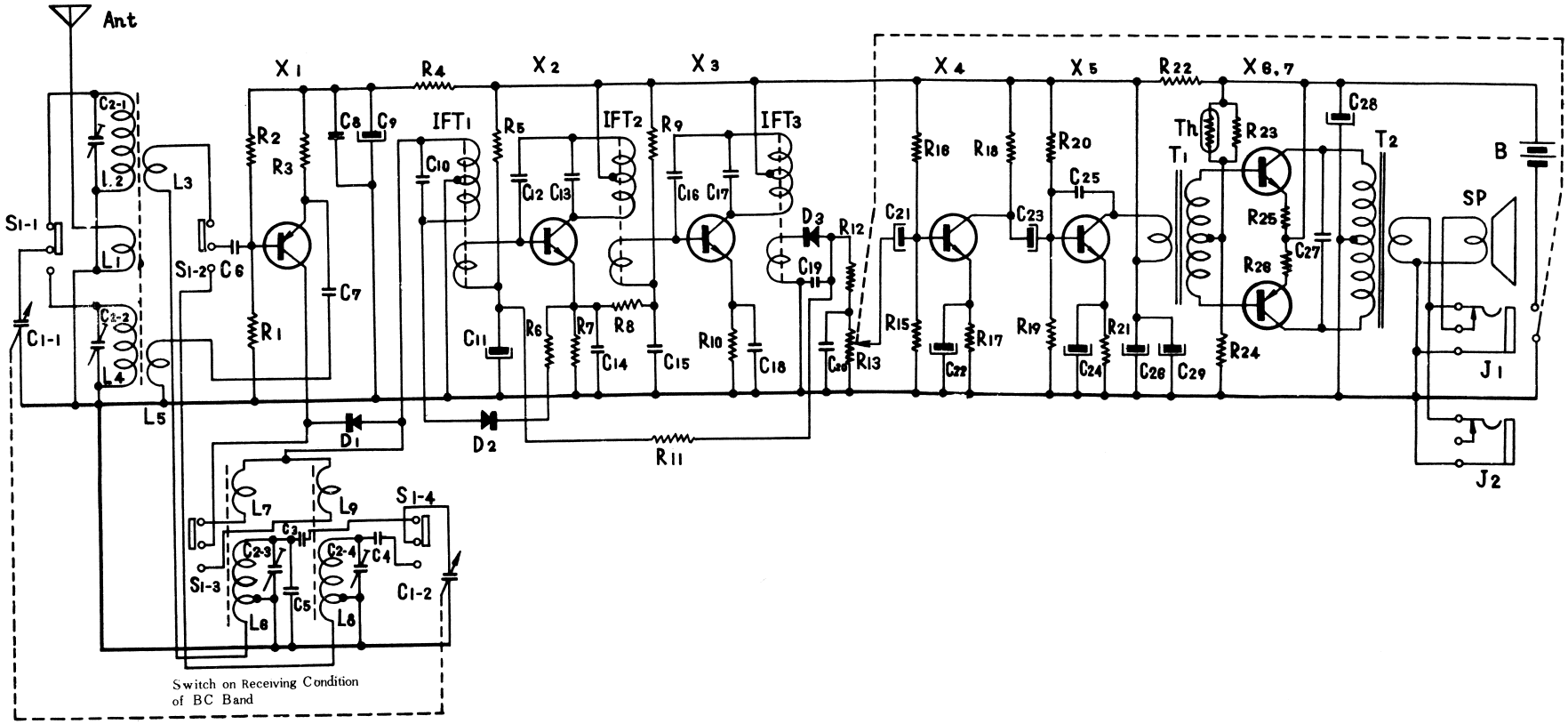

Ant	Rod Antenna	X_1	2T20	R_2	2.2K	R_{17}	330	C_5	10 μμF 〃 〃	C_{20}	〃 〃
L_1	Ext. Ant. Coil At-130/6A5	X_2	2T76	R_3	1.5K	R_{18}	560	C_6	0.01 μF Ceramic Condenser	C_{21}	10 μF 3V Electrolytic Condenser
$L_2 L_3$	BC Tuning Coil At 130/6A5	X_3	2T76	R_4	33K	R_{19}	2.2K	C_7	0.05 μF 〃 〃	C_{22}	30 μF 3V Electrolytic Condenser
$L_4 L_5$	SW Tuning Coil At 130/6A5	X_4	2T66	R_5	33K Adjustable	R_{20}	5.6K	C_8	0.01 μF 〃 〃	C_{23}	10 μF 3V 〃 〃
$L_6 L_7$	BC Oscillator Coil	X_5	2T66	R_6	1.2K	R_{21}	60	C_9	30 μF 3V Electrolytic Condenser	C_{24}	30 μF 3V 〃 〃
$L_8 L_9$	SW Oscillator Coil	X_6	2T32	R_7	220	R_{22}	33	C_{10}	IFT Built-in	C_{25}	0.01 μF MFL
IFT_1	LI-020-AP	X_7	2T32	R_8	560	R_{23}	220	C_{11}	10μF3V Electrolytic Condenser	C_{26}	30 μF 3V Electrolyic Condenser
IFT_2	LI-008-BP			R_9	6.2K	R_{24}	2.2K	C_{12}	2 μμF Adjustable Styrol Condenser	C_{27}	0.1 μF Dise Condenser
IFT_3	LI-008-CP	D_1	1T23G	R_{10}	220	R_{25}	3	C_{13}	IFT Built-in	C_{28}	30 μF 3V Electrolytic Condenser
T_1	TI-007	D_2	1T23G	R_{11}	4.2K	R_{26}	3	C_{14}	0.02 μF MFL	C_{29}	30 μF 3V 〃 〃
T_2	TX-008	D_3	1T23G	R_{12}	100			C_{15}	〃 〃		
SP	6cm PDS V.C 8Ω	Th	S-250	R_{13}	5K VR with Switch	C_1	PVC 2 J	C_{16}	2 μμF Adjustable Styrol Condenser		
J_1	Earphone Jack	S_1	Switch	R_{14}		C_2	4 Trimmers	C_{17}	IFT Built-in		
J_2	Earphone Jack			R_{15}	6.8K	C_3	370 μμF Styrol Condenser	C_{18}	0.02 μF MFL		
B	UM-2×2 3V	R_1	6.2K Adjustable	R_{16}	22K	C_4	2000 μμF 〃 〃	C_{19}	〃 〃		

SONY CORPORATION

Mounted circuit board of TR-710 B and TR-710 Y

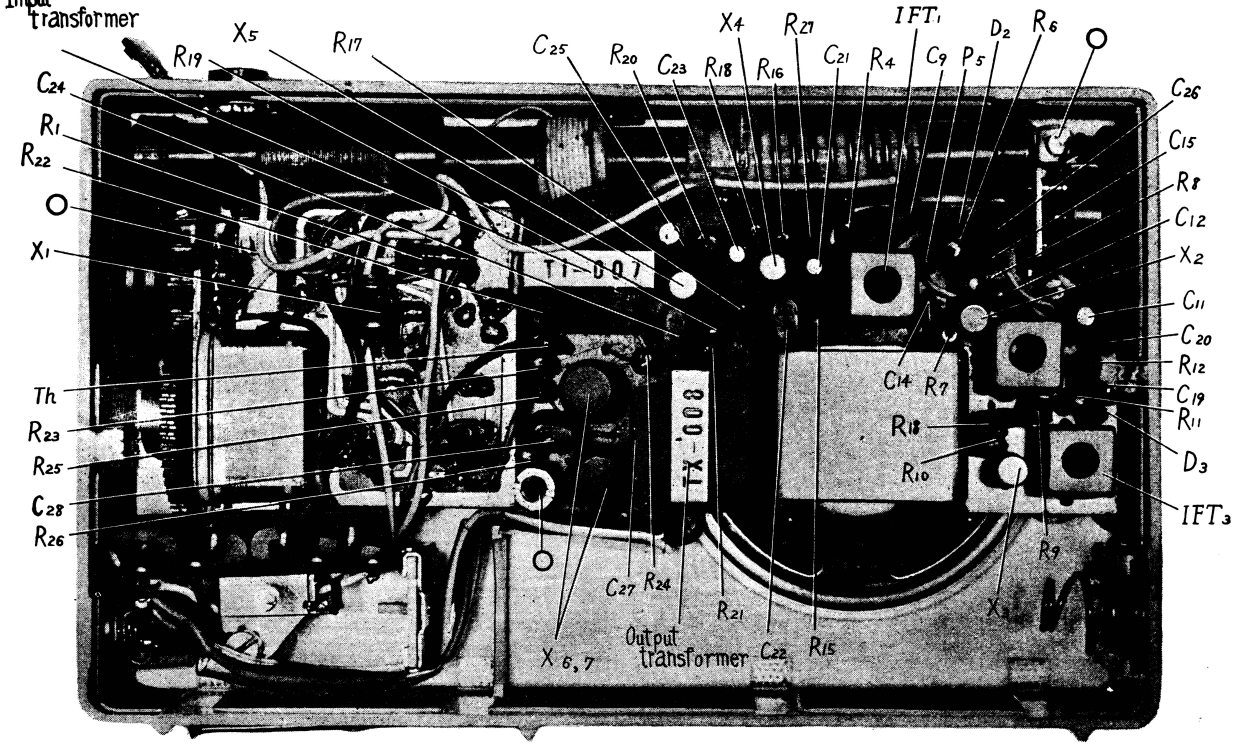

Lead connection of Type 2T3 transistor

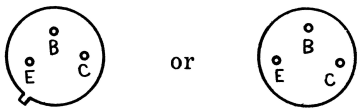

Bottom view

To take out the circuit board from the cabinet loosen and remove 4 screws shown by ○ in the pictute.
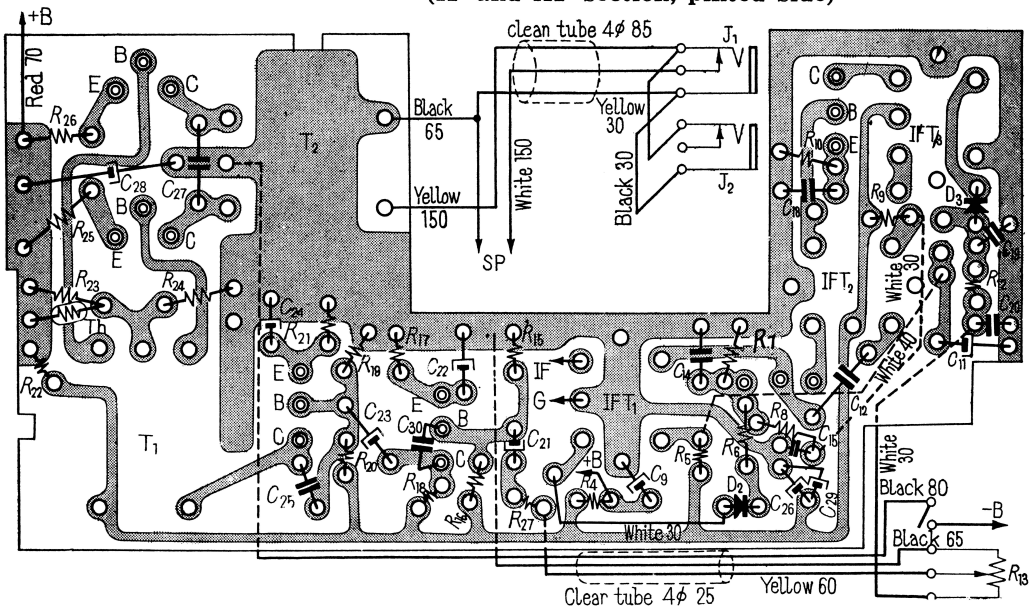
Mounting diagram of TR-710 B and TR-710 Y (IF and AF section, pinted side)