Service
Service
Service

Service Manual

12 V

SPECIFICATIONS

Number of Tracks	4 Track 2 Channels.
Tape/Cartridge	Stereo Monaural Compact Cassette.
Tape Speed	4.75 cm/sec.
Power Input	12 Volt D.C. Negative Earth
Current	Approx. 1 amp. (at 0.5 watt output).
Power Output	3.5 watts min. R.M.S. (at THD = 10%) per Channel.
Speaker Impedance	4 ohms per Channel.
Transistors & ICs	5 Transistors.
	3 ICs.
	11 Diodes.

CHECK POINTS ON PC BOARD

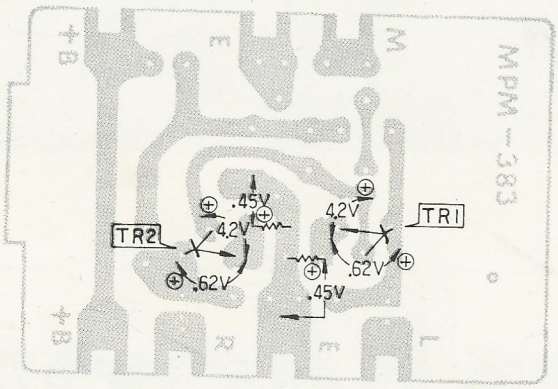

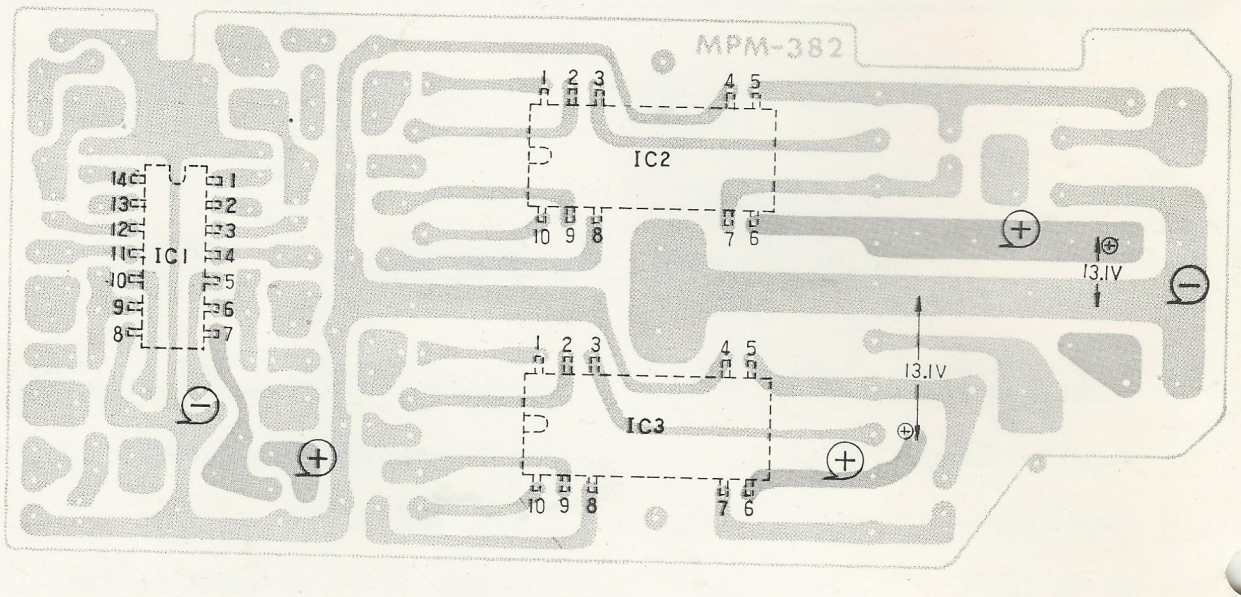

IC \ Pin No.	1	2	3	4	5	6	7	8	9	10	11	12	13	14
IC 1	8.4V	2.0V	.55V	—	.65V	4.2V	9.2V	—	4.2V	.65V	—	.55V	2.0V	8.4V
IC 2, IC 3	2.9V	3.4V	1.4V	—	6.8V	13.1V	12.2V	4.0V	8.2V	1.3V	—	—	—	—

NOTES: 1. DC voltages measured with 25,000 ohm per volt meter, power supply set at +13.2 VDC, no signal input.

2. ⊕ denotes positive polarity of the tester.

3. IC pin voltages measured with respect to chassis.

REF. NO	DESCRIPTION			SERVICE CODE
CAPACITORS				
C1,22	10uF	16V	Electro	4802 124 47044
C2,3	.022uF	50V	Mylar	4802 121 47163
C4,23	4.7uF	25V	Electro	4802 124 47034
C5,24	.015uF	50V	Mylar	4802 121 47161
C6,25	200pF	50V	Ceramic	4802 122 47077
C7,26	47uF	10V	Electro	4802 124 47016
C27	220uF	16V	Electro	4802 124 47018
C8,28	10uF	16V	Electro	4802 124 47044
C9,31	.0022uF	50V	Ceramic	4822 122 30114
C29	.1uF	12V	Ceramic	4802 122 47055
C30	10uF	16V	Electro	4802 124 47044
C10,32	4.7uF	25V	Electro	4802 124 47034
C11,33	1uF	50V	Electro	4802 124 47037
C34	10uF	16V	Electro	4802 124 47044
C35	.022uF	50V	Mylar	4802 121 47163
C36	220uF	16V	Electro	4802 124 47018
C12,37	47uF	10V	Electro	4802 104 47016
C13,38	220uF	10V	Electro	4802 124 47006
C14,39	40pF	50V	Ceramic	4822 122 31069
C15,40	.068uF	50V	Mylar	4802 121 47169
C16,41	100uF	10V	Electro	4802 124 47002
C17,42	200pF	50V	Ceramic	4822 122 30094
C18,43	470uF	16V	Electro	4802 124 47024
C19,20	470uF	16V	Electro	4802 124 47024
C21,44	.068uF	50V	Mylar	4802 121 47169
C27	220uF	16V	Electro	4802 124 47018
C47,48	10uF	16V	Electro	4802 124 47044
C49	100uF	10V	Electro	4802 124 47002
C50	10uF	16V	Electro	4802 124 47044
C51	220uF	16V	Electro	4802 124 47018

RESISTORS AND CONTROLS

NOTE: All Resistors are standard values and tolerances unless specified otherwise.

R8. R20	10k ohm Variable (Vol. Control)	4802 102 37105

MISCELLANEOUS ELECTRICAL

A1	Playback Head (EHM-C44-21)	4802 249 37005
E1	Solenoid (EEM-15)	4802 281 37001
M1	Motor (EDM-23)	4802 361 27033
P1	Connector 20P (S20V227)	4802 265 57001
PL1,PL2	Lamp 14V (EPL-54-3)	4802 434 47059
RY1	Relay + S10 (EED-30)	4802 280 87003
S1,S2,S3,S4	Slide Switch (ESS-42-115)	4802 277 67012
S5,S6	Leaf Switch Auto Reverse(ESL-153A)	4802 278 97031
S7,S8	Micro Switch (ESM-105A)	4802 271 37008
S9	Push Switch (ESB,2N2-140)	4802 277 67014

REF. NO	DESCRIPTION	SERVICE CODE
TRANSISTORS, IC'S & DIODES		
TR1,TR2	Mix. Amp. 2SC828-Q5(Use BC547)	4822 130 40965
TR3	Auto Eject (2SA 564-PQ)	5322 130 44315
TR4	Relay Control (2SC1247A-VS)	4802 130 47175
TR5	Subsidiary Relay Cont.(Use BC547)	4822 130 40965

NOTE: When using alternative Transistors check Base Connections before fitting to PC Board.

IC1	Pre Amp (TA7108P)	4802 209 87036
IC2,IC3	Audio Power Output(TA7201P-BC)	4802 209 87059
D1,D2	Electronic Tone (1S1555)	4802 130 37033
D5,6,7,8	Compensator Rect. Wave(1S1555)	4802 130 37033
D9	Relay Spark Suppression(SR1K2)	4802 130 37022
D10,11	Back Current Suppression (1S1555)	4802 130 37033
D12	Back Current Suppression(SR1K2)	4802 130 37022
D13	Spark Suppression (SR1K2)	4802 130 37022

STYLING

5	Escutcheon(Inc. Flap,Shaft & Spring)	4802 459 47067
6	Knob, Volume	4802 413 47126
7	Button, Programme	4802 410 27053
8	Supporter, Lamprubber	4802 325 87015
9	Button, F.F. (Left)	4802 410 27054
10	Button, Stop Eject	4802 410 27055
11	Button, F.F. (Right)	4802 410 27056
12	Cover (Push Buttons)	4802 404 27061
15	Flap (Cassette Slot)	
16	Shaft for item 15	4802 443 67042
17	Spring for item 16	

REF. NO	DESCRIPTION	SERVICE CODE
CASSETTE DECK		
26	Spring	4802 492 37145
27	Spring	4802 492 37146
28	Pinchroller Assy. (Right)	4802 403 47013
29	Pinchroller Assy. (Left)	4802 403 47014
33	Spring	4802 492 67179
34	Spring	4802 492 67181
35	Cam. FF/RW Selector	4802 403 37019
36	Spring	4802 492 37147
37	Lever, F.F.	4802 403 37021
38	Lever, F.F. Release	4802 403 37022
39	Lever, Solenoid	4802 403 37023
40	Shaft, for items 38 & 39	4802 533 97088
41	Spring	4802 492 37148
42	Stopper, for item 25	4802 403 57092
43	Shaft, for item 42	4802 535 77066
44	Spring	4802 492 67182
45	Spring, Slip Mechanism	4802 492 67183
47	Lever, F.F.(Left)	4802 403 37024
48	Lever, F.F.(Right)	4802 403 37025
49	Spring	4802 492 37149
50	Lever, Stop & Eject	4802 403 37026
51	Spring	4802 492 37151
53	Lever, S1 to S4 changing	4802 403 37027
54	Lever	4802 403 27013
55	Lever	4802 403 27014
56	Lever, Pinchroller changing	4802 403 27015
57	Spring	4802 492 67184
58	Housing, for item 60	4802 520 17018
59	Roller, for item 60	4802 535 27002
60	Flywheel	4802 528 67024
61	Belt	4802 358 37041
62	Pulley	4802 528 87064
63	Roller	4802 528 87065
64	Supporter	4802 403 27016
65	Lever, Left Fwd Idler	4802 403 27017
66	Lever, Right Fwd Idler	4802 403 27018
67	Roller	4802 528 77034
68	Spring	4802 492 37152
69	Lever, Left F.F. Idler	4802 403 27019
70	Lever, Right F.F. Idler	4802 403 27021
71	Roller	4802 528 77035
72	Spring	4802 492 37153
73	Brake, Slip Mechanism	4802 403 17013
74	Spring	4802 492 37154
77	Slip Mechanism Assy.(Items 80 to 89 inclusive)	4802 528 17065
79	Cap, for item 77	4802 462 77153
91	Lever, Fan shaped	4802 403 57093

REF. NO	DESCRIPTION	SERVICE CODE
CASSETTE DECK cont.		
92	Spring	4802 492 37155
93	Bar, Coupling	4802 535 87013
94	T, Lever left	4802 403 57094
95	T, Lever right	4802 403 57095
96	L, Lever right	4802 403 57096
97	L, Lever left	4802 403 57097
98	Bar, item 94 & 95 Coupling	4802 535 87014
99	Lever	4802 404 27063
100	Lever	4802 403 57099
101	Spring	4802 492 37156
102	Runner, left	4802 403 57101
103	Runner, right	4802 403 57102
104	Roller	4802 532 67046
106	Spring	4802 492 67185
110	Runner, for item 39	4802 404 27064
PRINTED CIRCUIT BOARD		
115	PC Board Assy., Auto Reverse	4802 214 57042
116	PC Board Assy., Mix. Amp.	4802 214 57043
117	PC Board Assy., Main	4802 214 57044
118	PC Board S1 to S4	4802 214 57045
MISCELLANEOUS		
129	Rivet	4802 535 37011
130	E Ring, Snap (for 4mm shaft)	4822 530 70124
131	E Ring, Snap (for 3mm shaft)	4822 530 70123
132	E Ring, Sanp (for 2mm shaft)	4822 530 70122
133	E Ring, Snap (for 1.5mm shaft)	4822 530 70121
134	E Ring, Snap (for 1.2mm shaft)	4822 530 70119
135	Washer, 4mm	4822 532 10333
136	Washer, 3mm spring	4822 530 80075
137	Washer	4802 532 57075
139	Screw 2 x 3mm	4802 502 17038
140	Screw 2 x 3mm	4822 502 10908
	Screw 2.3 x 10mm	4802 502 17039
	Screw 2.6 x 4mm	4822 502 11084
	Screw 2.6 x 6mm	4802 502 10034
	Screw 3 x 4mm	4822 502 11189
	Screw 3 x 5mm	4822 502 10558
	Screw 3 x 6mm	4822 502 11064
	Screw 2 x 4mm	4822 502 11059
	Speaker 4 ohm	4802 240 27048

ADJUSTMENT FOR PINCHROLLER PRESSURE

Hold a tension gauge to the pinchroller as shown in Fig. 1(a), and move it in the direction of the arrow noting the tension at which the pinchroller moves.
If the gauge shows less than 300 gram, set the spring to "A" in Fig. 1(b) or if it is more than 400 gram, set the spring to "B".
The tension for both left and right pinchrollers should always be between 300 and 400 gram.

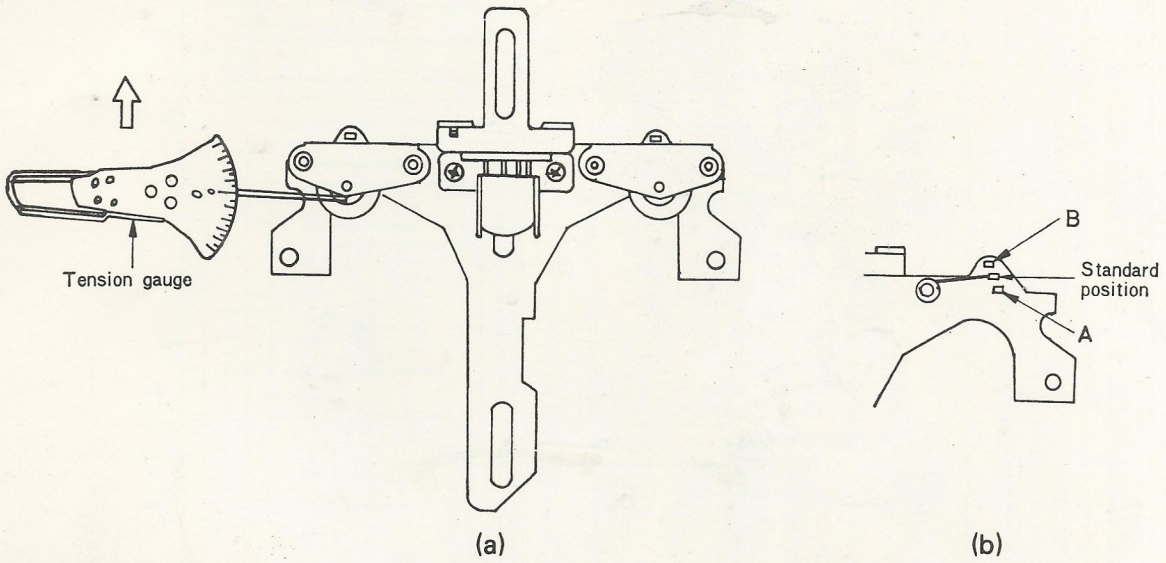

Fig. 1

ADJUSTMENT FOR TAKE-UP TORQUE

With the motor rotating, measure the torque as shown in Fig. 2(a).
If the gauge shows less than 40 gram-cm, set the spacer to the "A" position, and if it shows more than 50 gram-cm set the spacer to the "B" position.
The torque should always be between 40 and 50 gram-cm with a 13.2V power supply.

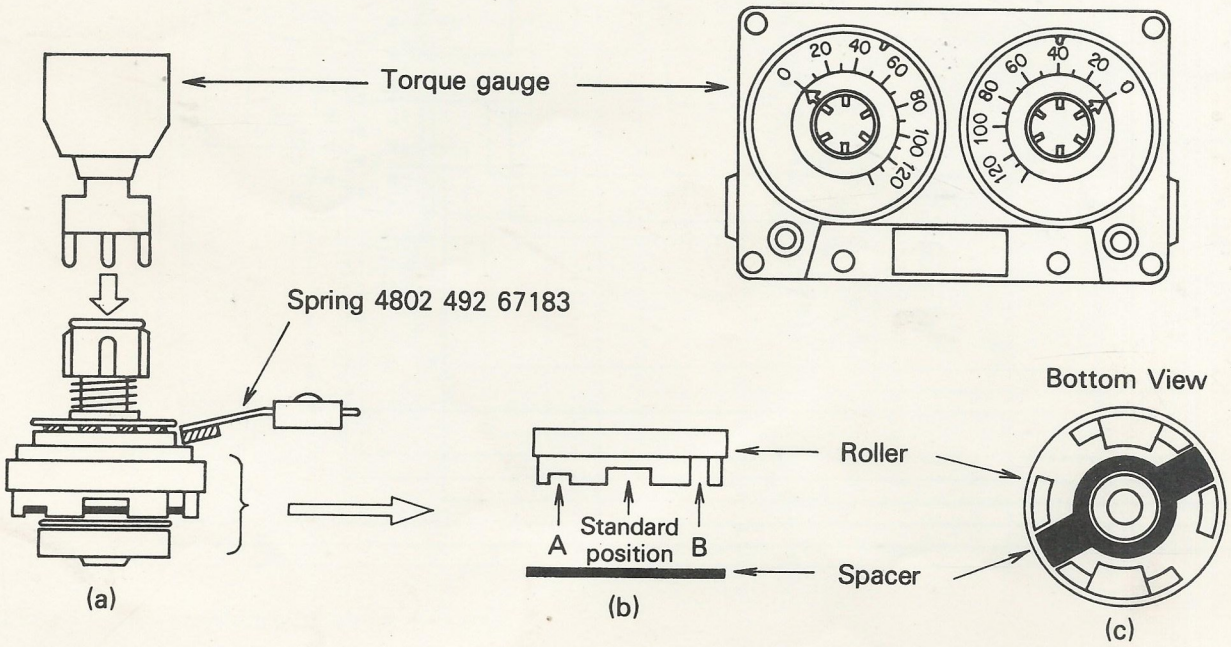

Fig. 2

BLOCK DIAGRAM

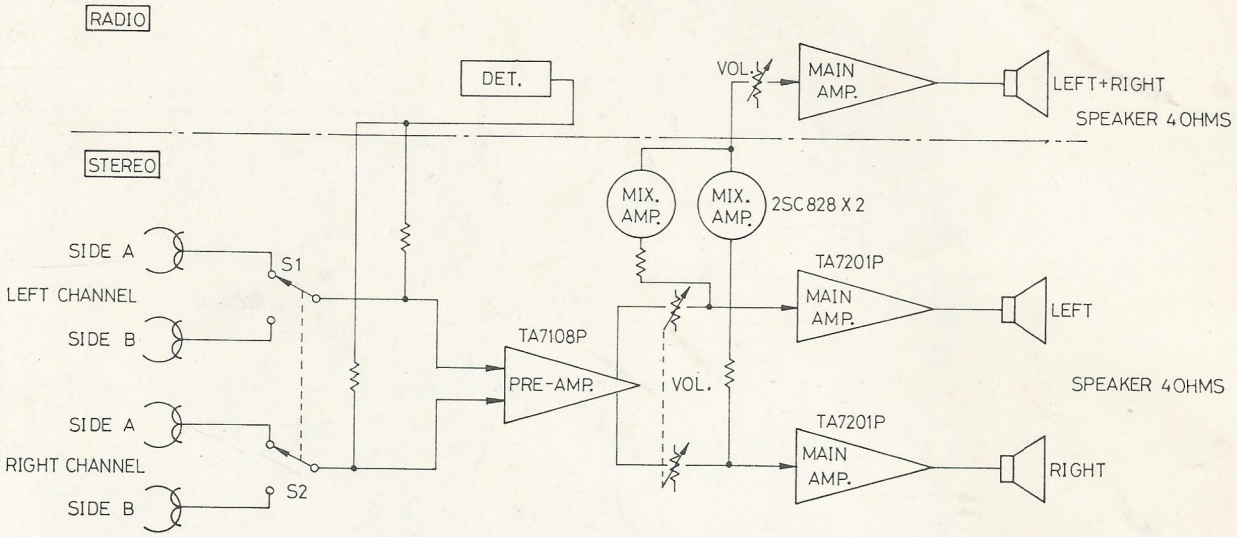

PARTS LOCATION ON PC BOARD

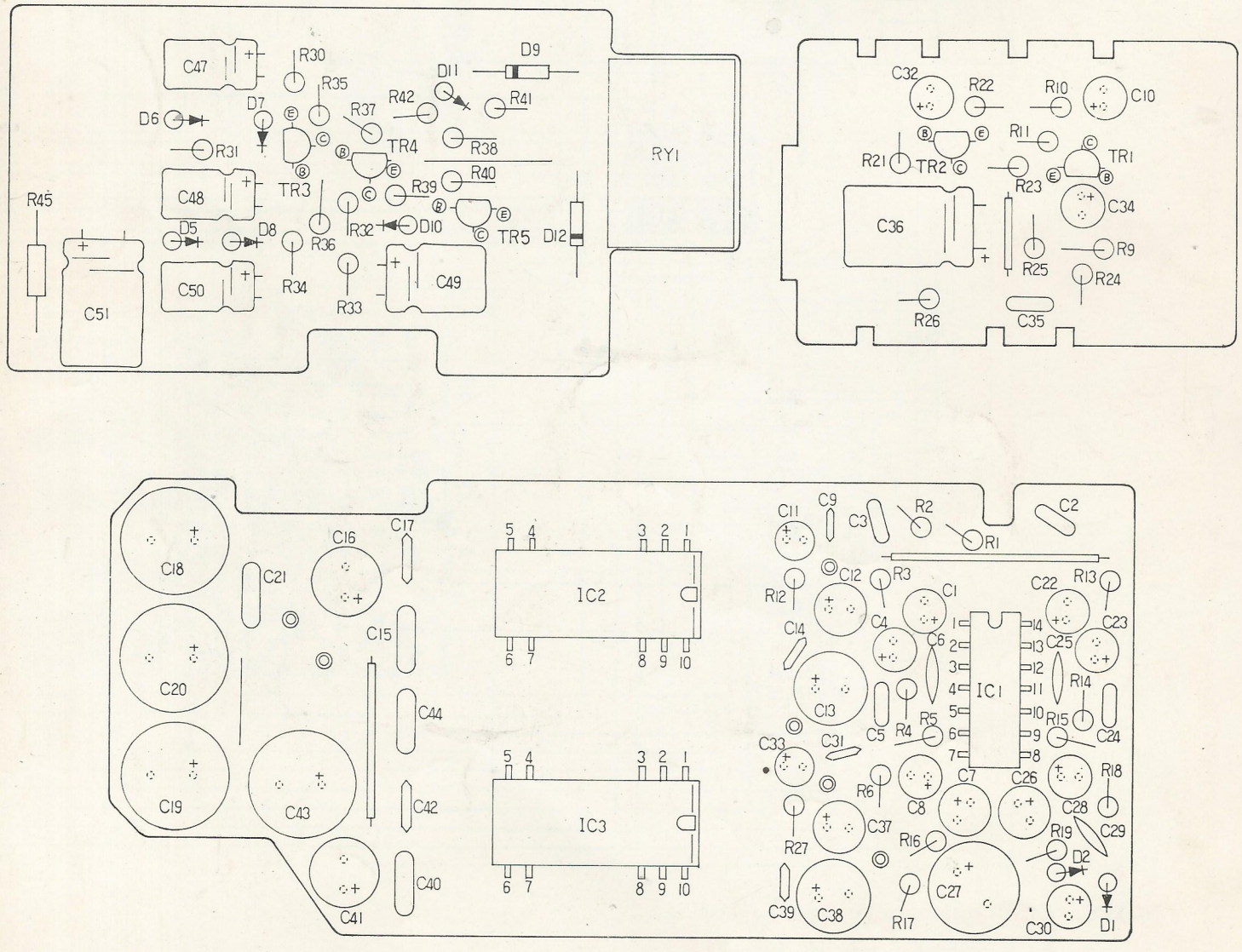

EXPLODED VIEW

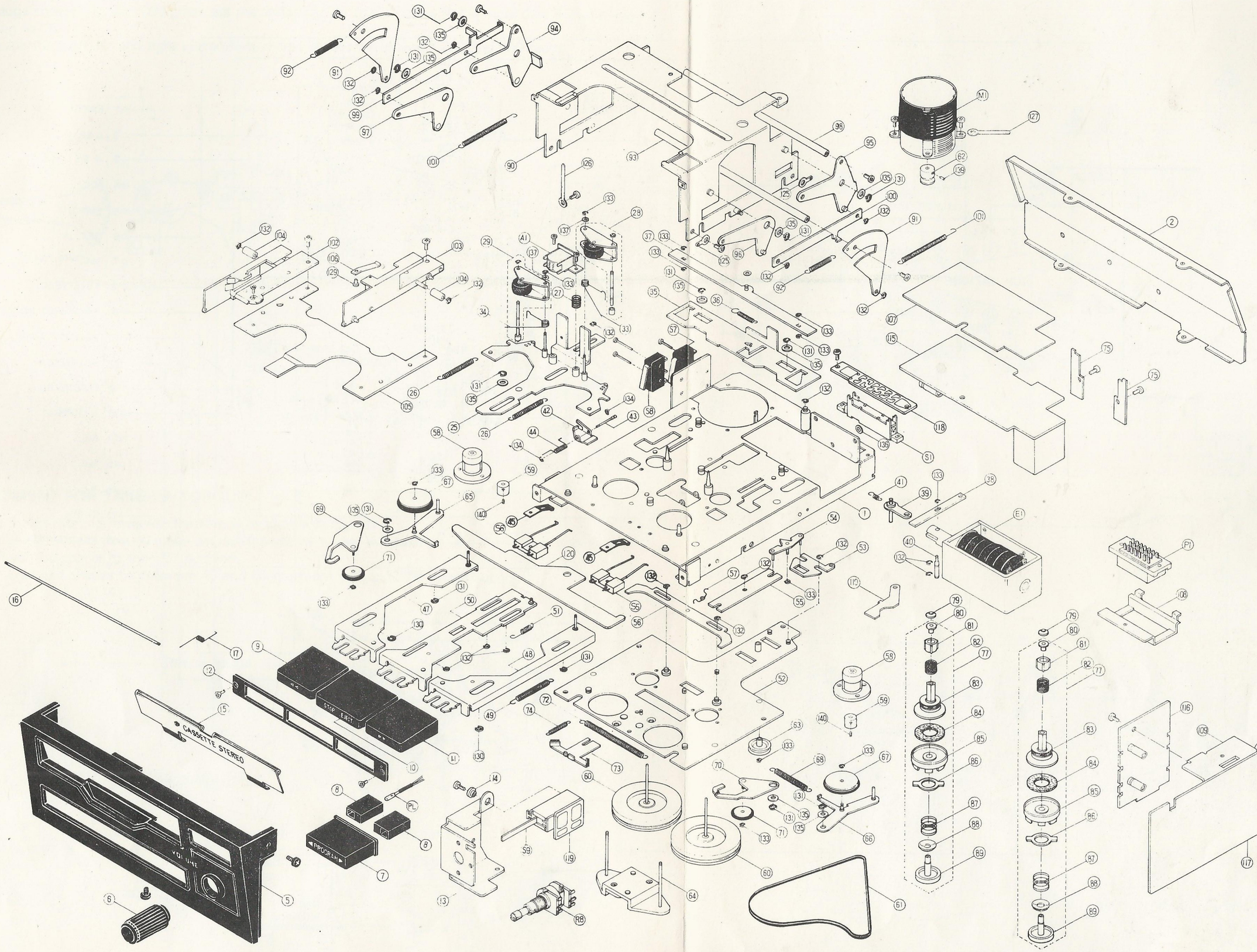

SCHEMATIC

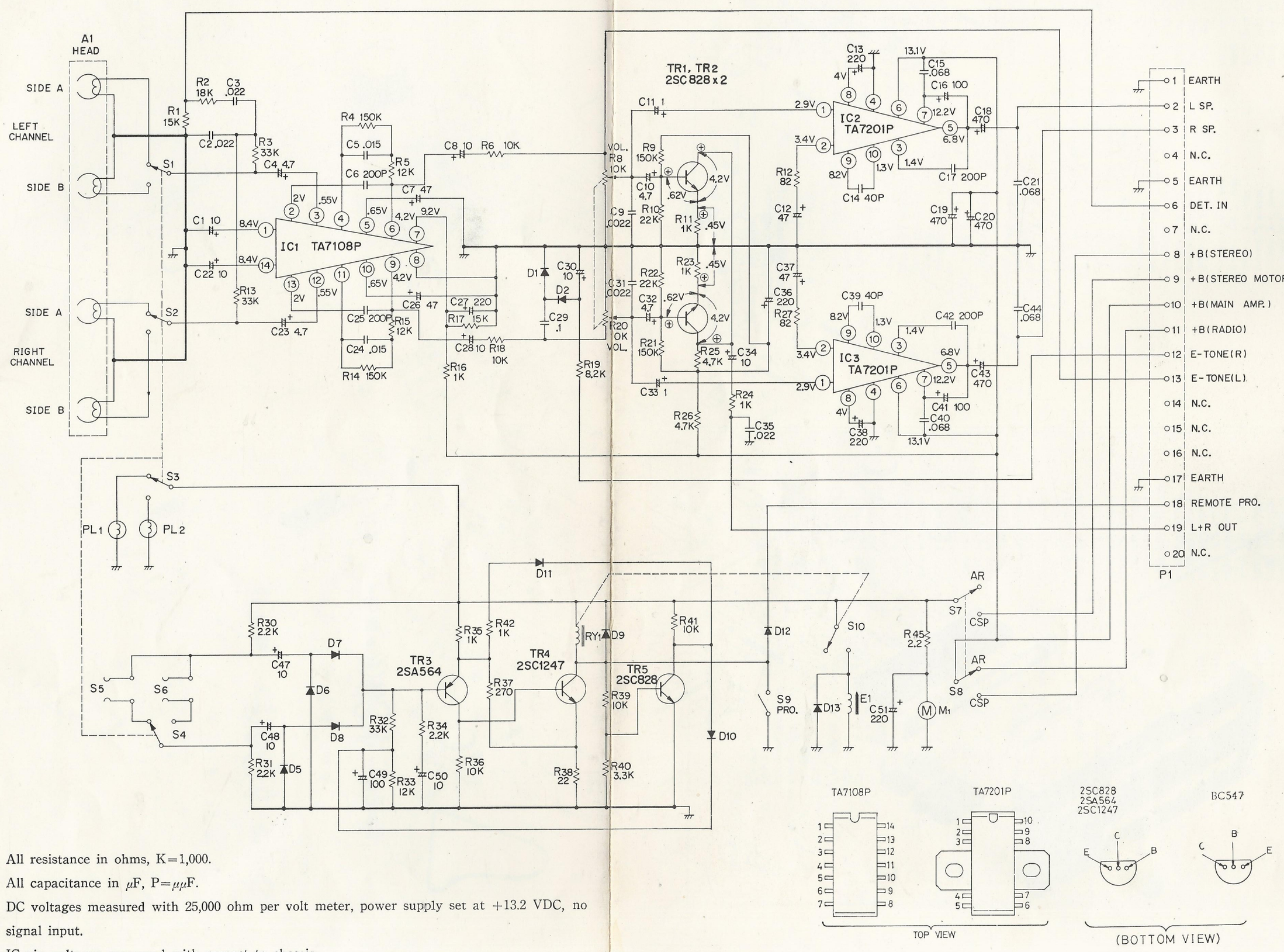

NOTES:

1. All resistance in ohms, K=1,000.
2. All capacitance in μF, P=$\mu\mu$F.
3. DC voltages measured with 25,000 ohm per volt meter, power supply set at +13.2 VDC, no signal input.
4. IC pin voltages measured with respect to chassis.

WIRING ON PC BOARD

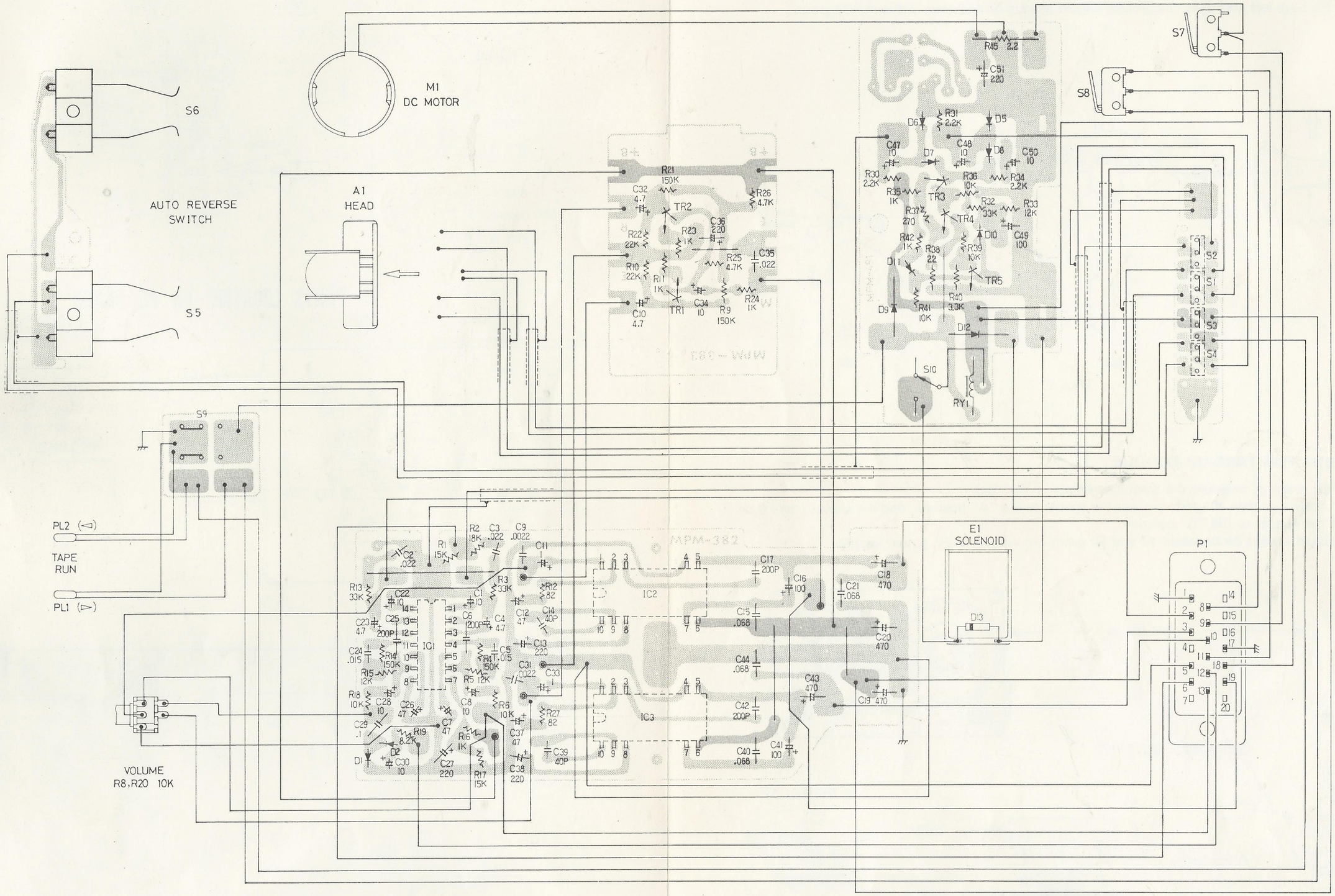

NOTES: 1. All resistance in ohms, K=1,000.

2. All capacitance in μF, P=$\mu\mu$F.

3. S_5 and S_6 contact points are included in roller. (SEE ITEM 77)