SERVICE DATA

E.I.L. MODEL STD-1

STEREO CASSETTE TAPE RECORDER

PART NUMBER: 4064-006-01

POWER SOURCE: Motor - 100 Volts 50Hz
Pre-amps - 12 Volts D.C.

REMOVAL OF TAPE UNIT:
Unplug lead from unit at the chassis
Remove two control knobs
Remove four screws securing front escutcheon and lift escutcheon clear of main unit.
Remove five screws securing main unit to cabinet and lift clear.
Disconnect leads from tape power transformer and remove tape unit from cabinet.

Information contained herein must not be reproduced without prior written permission from Astor Electronics Pty. Ltd.

HEAD ADJUSTMENT

The Record/Play head is adjustable in its azimuth position only.
The Erase head is not adjustable in any of its positions.
The azimuth position of the Record/Play head is adjusted by using a pre-recorded azimuth adjustment cassette Part No. 4121-031-01 (Philips type 4822-218-001-99).

1. Connect a 470K ohm dummy load to pin 3 of output plug and a VTVM across dummy load.

2. Place a pre-recorded azimuth adjustment cassette in the unit.

3. Turn Record/Play head adjustment screw as shown to obtain the maximum reading on the VTVM.

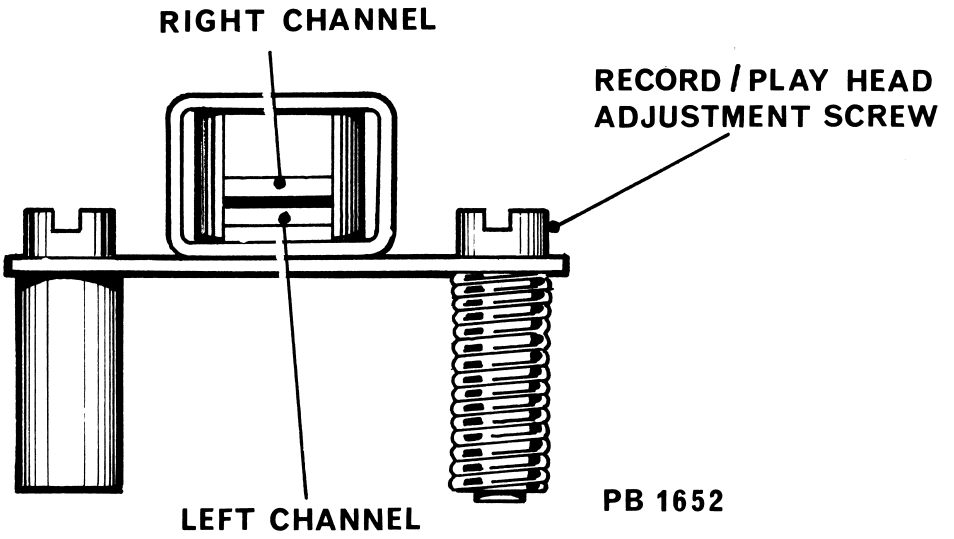

LUBRICATION

Surfaces must be cleaned before relubrication to remove all traces of dirt, grit and old oil. Use small quantities of oil and wipe off any excess to prevent the lubricant from spreading and to prevent an accumulation of dust and grit. Lubricate slide and pivot points with record changer oil. It is important that the rubber surface of the pressure roller and the surface of the capstan shaft be kept clean and free of any traces of oil.

PINCH ROLLER ADJUSTMENT

The pinch roller may be adjusted as shown. Hook spring in hole required.

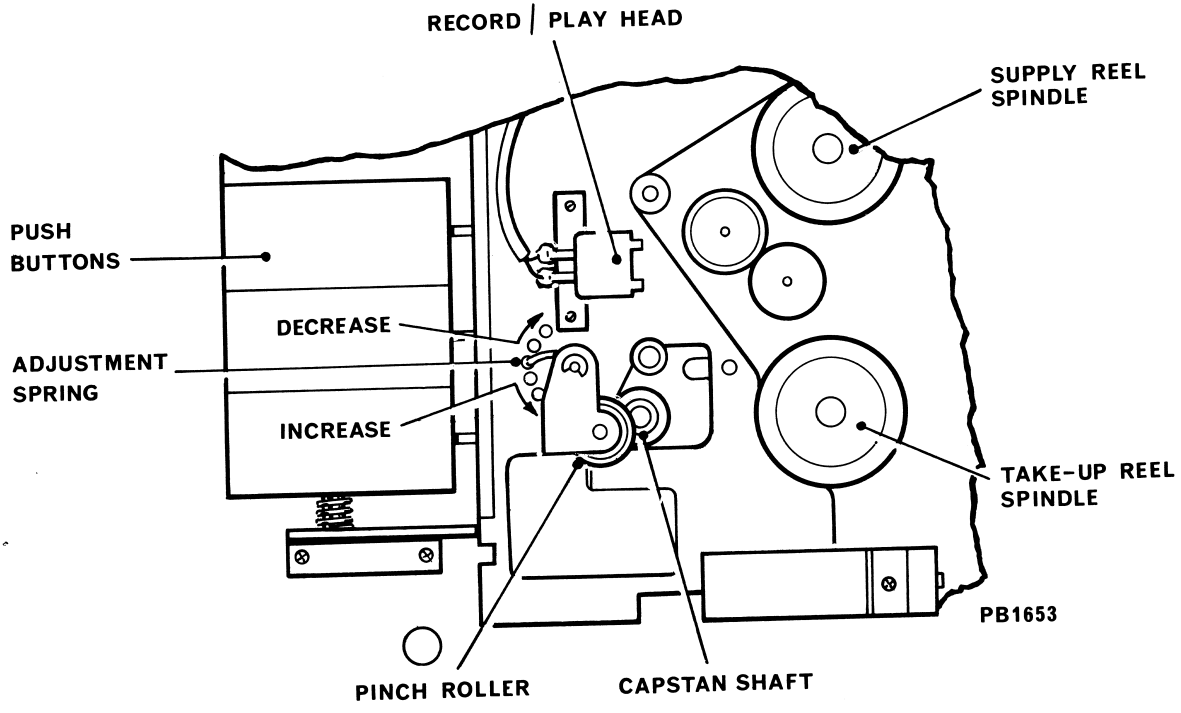

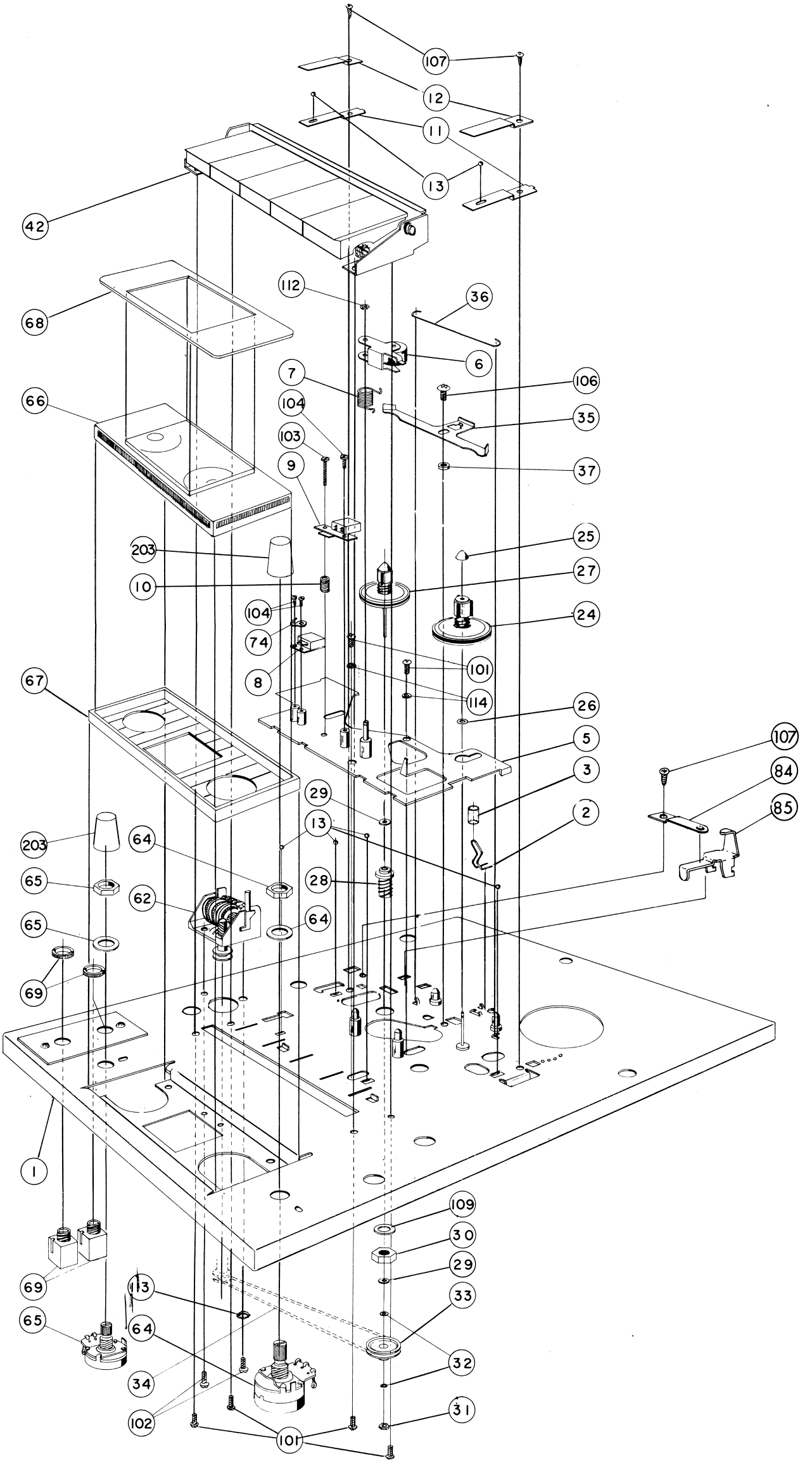
107
12
11
13
42
68
112
36
6
7
106
66
104
35
103
9
37
203
25
10
27
104
24
74
101
8
114
67
26
5
107
3
84
29
2
85
203
13
64
65
28
62
64
65
69
1
109
30
29
69
113
33
65
64
32
34
102
31
101

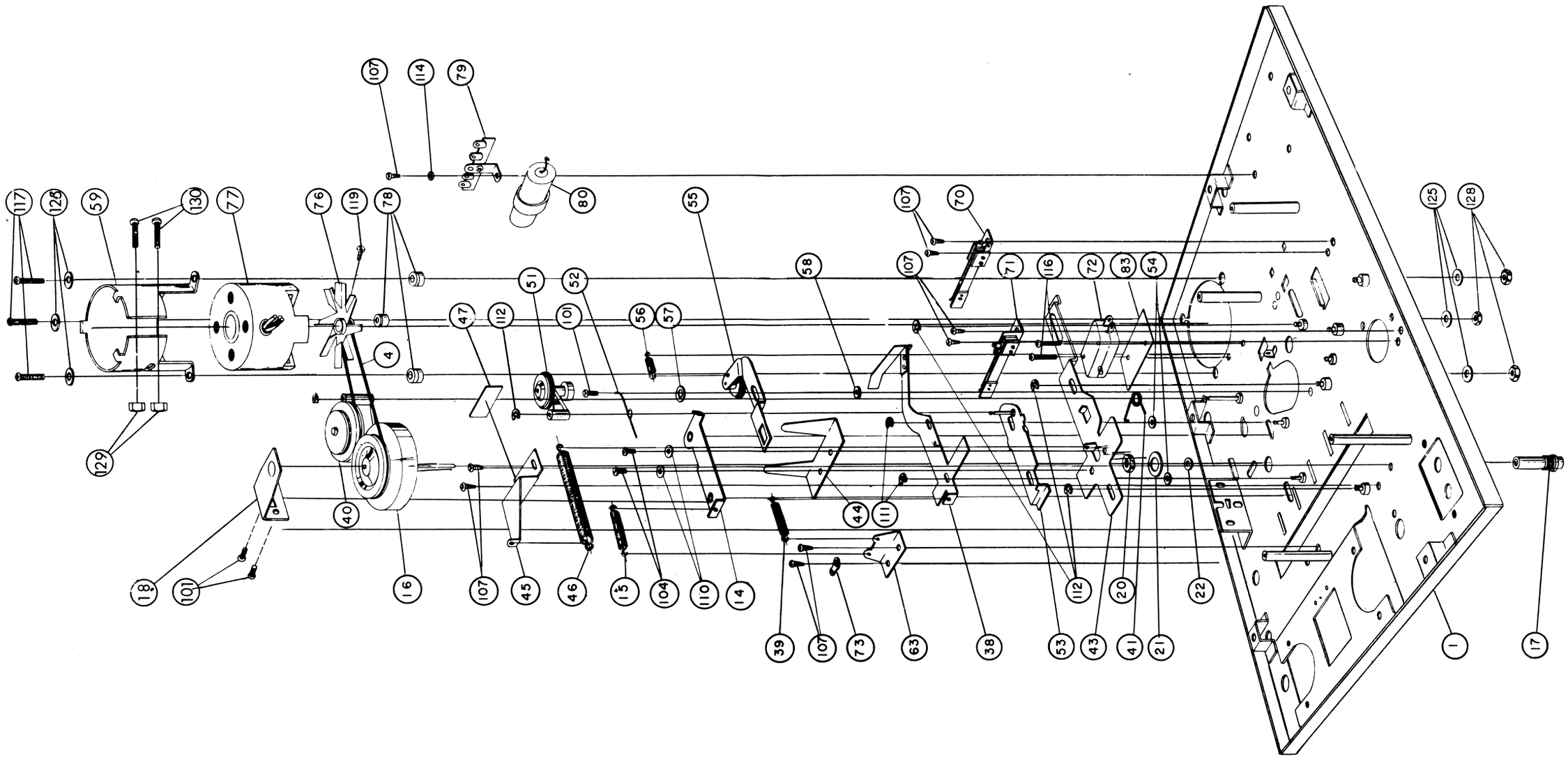

COMPONENTS AVAILABLE FROM

SPARE PARTS DIVISION

Component Ident.	Description	Part Number
2	Spring fix cassette	7225-297-01
4	Square driving belt	7017-013-01
6	Pinch roller assy.	7189-023-01
8	Erase head	4066-004-01
9	Record/Play head	4066-005-01
16	Flywheel	7272-041-01
17	Capstan bush assy.	7031-164-01
19	Screw-flywheel adjust	7303-052-01
24	Reel plate assy.	7410-004-01
25	Cap-reel plate	7308-028-01
27	Reel plate assy.	7410-003-01
28	Bush holder assy.	7031-163-01
34	Belt-counter	7017-014-01
40	Take-up pulley assy.	7174-070-01
42	Select button assy.	7032-023-01
49	Interlock lever assy.	7131-055-01
51	Idler Assy.	7174-071-01
55	Rewind roller and arm assy.	7174-072-01

Component Ident.	Description	Part Number
59	Motor	4054-025-01
64	Volume Control - 10K ohm with switch	4032-007-22
65	Volume Control - 10K ohm	4032-007-23
66	V.U. Meter	4069-002-01
69	Jack Socket	7222-160-01
72	Micro Switch	4059-220-01
81	Tape Counter	7412-001-01
103	Screw 2 x 12mm flat head	7309-077-01
104	Screw 2 x 4mm flat head	7309-077-02
203	Knob - volume	7124-476-01
-	Front escutcheon	7084-317-01
C30	Capacitor .1uF 250V Motor Start	4009-012-11
-	Slide Switch on Circuit Board	4059-221-01
T1	Driver Transformer	4042-154-01
OSC-T	Bias osc. coil	4036-091-01
L2	Bias rejection coil	4036-092-01
L1	Choke	4048-062-01

TAKE-UP REEL SPINDLE

If additional tension is needed on the take-up reel spindle the spring may be hooked in a different hole as shown.

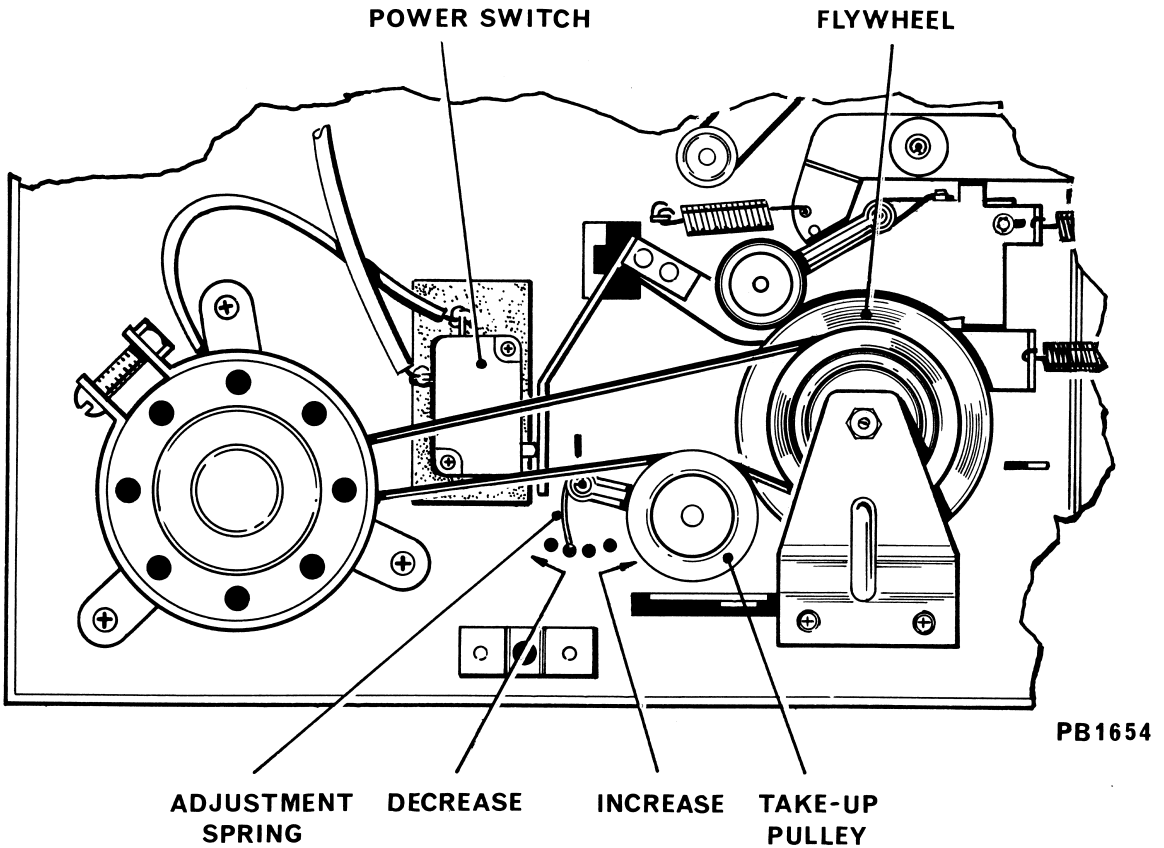

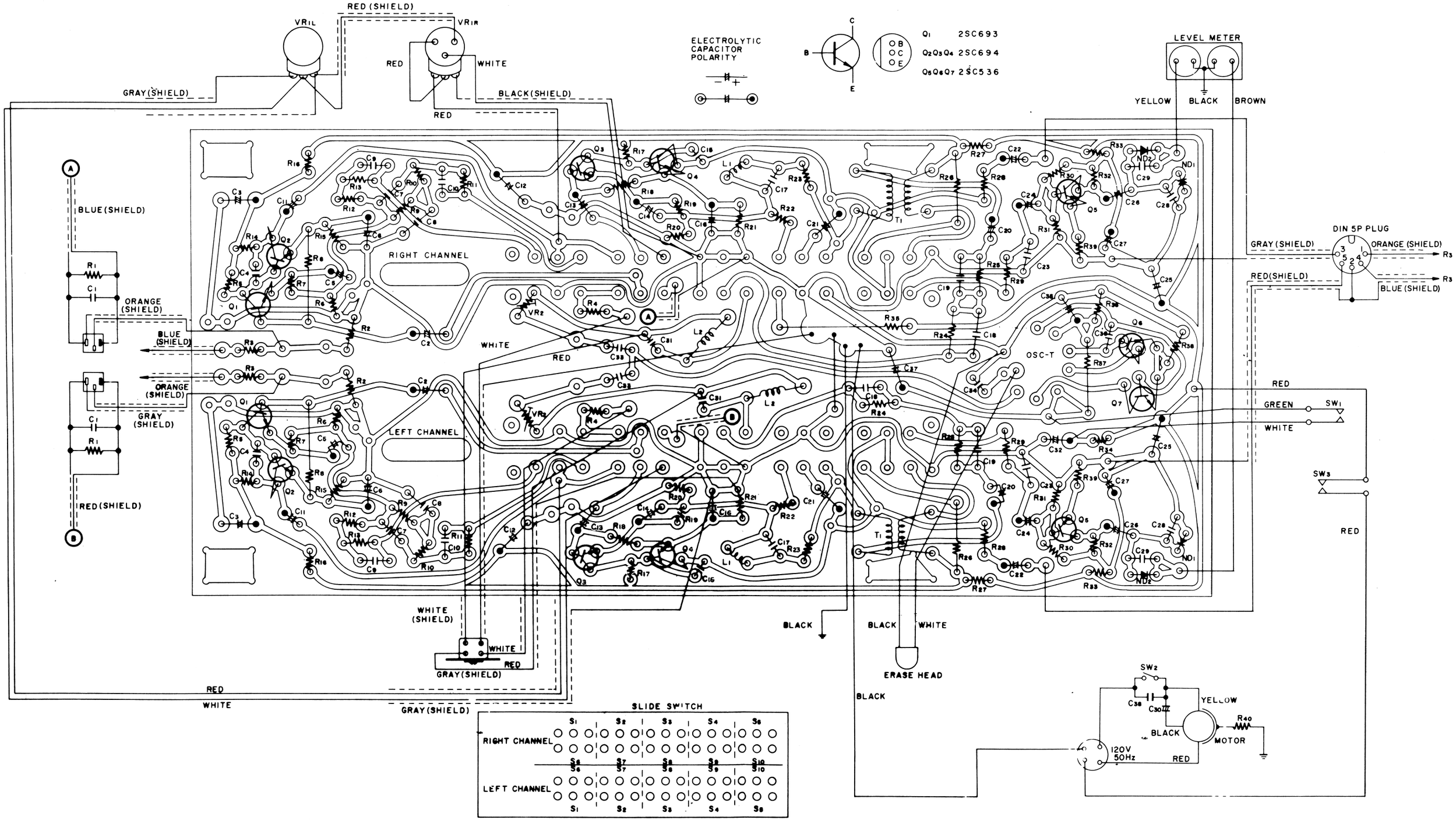
RED (SHIELD)
VR1L
VR1R
RED
WHITE
GRAY (SHIELD)
BLACK (SHIELD)
RED
ELECTROLYTIC CAPACITOR POLARITY
C
B
E
Q1 2SC693
Q2Q3Q4 2SC694
Q5Q6Q7 2SC536
LEVEL METER
YELLOW
BLACK
BROWN
BLUE (SHIELD)
ORANGE (SHIELD)
BLUE (SHIELD)
ORANGE (SHIELD)
GRAY (SHIELD)
RED (SHIELD)
RIGHT CHANNEL
LEFT CHANNEL
WHITE
RED
OSC-T
DIN 5P PLUG
GRAY (SHIELD)
ORANGE (SHIELD)
RED (SHIELD)
BLUE (SHIELD)
RED
GREEN
WHITE
SW1
SW3
RED
WHITE (SHIELD)
WHITE
RED
GRAY (SHIELD)
BLACK
BLACK
WHITE
ERASE HEAD
BLACK
RED
WHITE
GRAY (SHIELD)
SLIDE SWITCH
RIGHT CHANNEL
LEFT CHANNEL
SW2
YELLOW
BLACK
MOTOR
120V 50Hz
RED

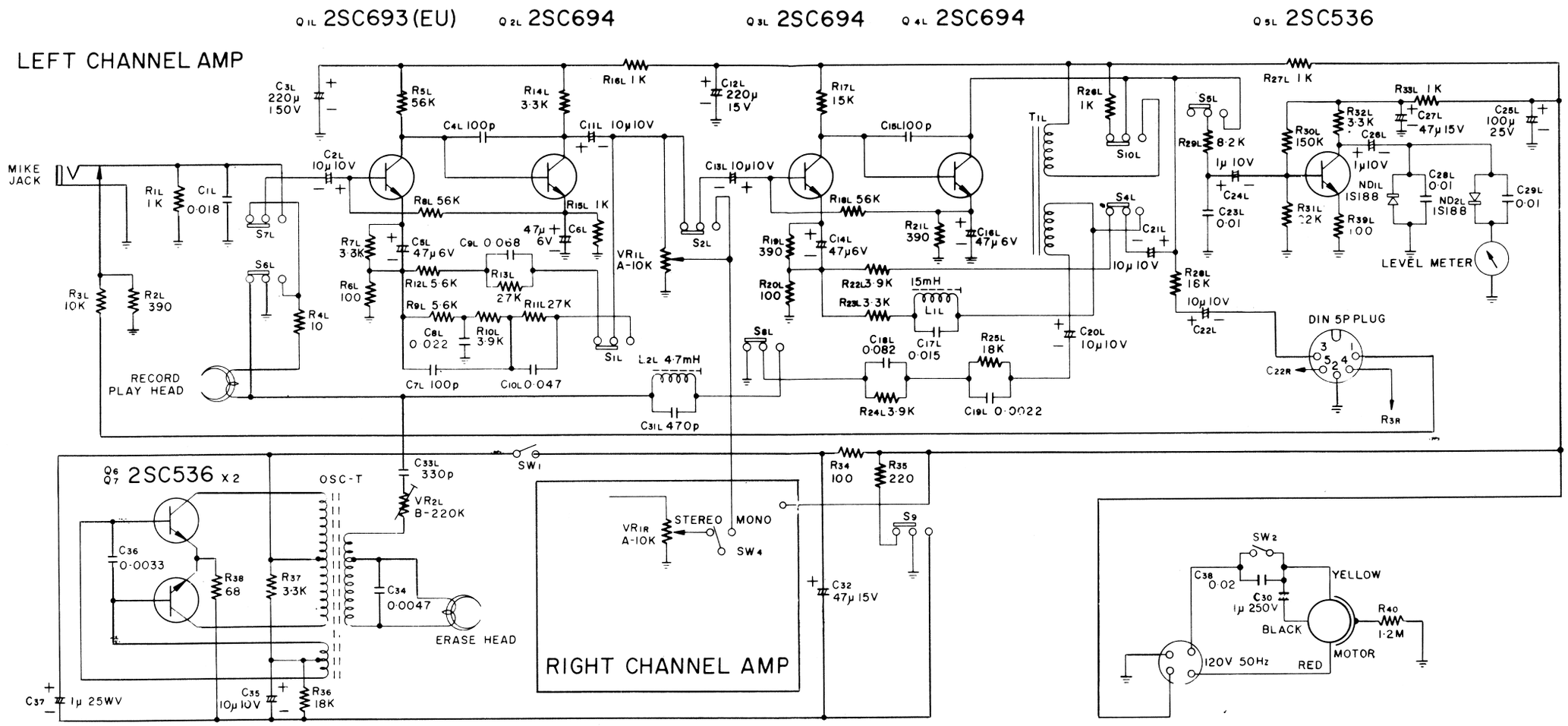

BIAS TRAP ALIGNMENT

1. Connect a 470K ohm dummy load to pin 3 of output plug and a VTVM across dummy load.

2. Place unit in record position and adjust L2 Left with a non-metallic aligning tool for minimum reading on VTVM.

3. Repeat steps 1 and 2 for Right channel using pin 5 of output plug and L2 Right.

RECORD BIAS ALIGNMENT

1. Connect VTVM across R4 Left.

2. Place unit in record position and adjust VR2 Left for 3.5 millivolts across R4 Left.

3. Repeat steps 1 and 2 for Right channel using VR2 Right and R4 Right.