SP-401-1 SP-530-1

SM-206

CAR STEREO SERVICE MANUAL

4-TRACK CASSETTE CAR STEREO TAPE PLAYER
CUSTOM MADE FOR TOYOTA CROWN

TOYOTA PART NO. 86260-30070-D (SP-401-1)

TOYOTA PART NO. 86260-30081 (SP-530-1)

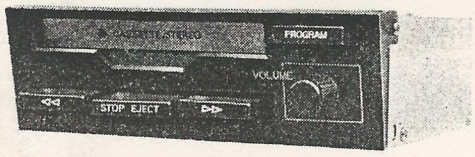

86260-30070-D (SP-401-1)

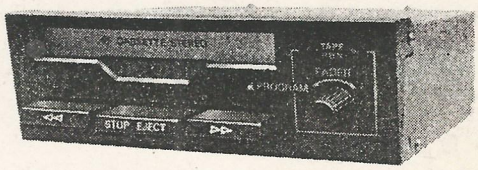

86260-30081 (SP-530-1)

GENERAL

TOYOTA Part Nos. 86260-30070-D (SP-401-1) and 86260-30081 (SP-530-1) are cassette tape players provided with automatic reversing device and designed specifically for TOYOTA CROWN manufactured after November 1976, and combined with custom-made auto radios as follows:

CASSETTE CAR STEREO	AUTO RADIO	SPEAKER SYSTEM	REMOTE CONTROL
86260-30070-D (SP-401-1)	86260-30222-A (AT-2125-1)	3-speaker system	Not provided
	86120-30272-A (AT-254-2)		Not provided
86260-30081 (SP-530-1)	86120-30232-A (AT-334-1)	4-spaeker system	Provided
	86120-30300-A (AT-3610-1)		Provided

NOTE: 1. The above units do not operate independently.

2. As for auto-reverse circuitry and mechanism, refer to the service manual (SM-207).

TOYOTA MOTOR SALES CO., LTD.

COMPOSITIONS

◎ SP-401S1

TAPE PLAYER AND SETTING PARTS SET 86012-30100-A (SP-401S1)
- —Tape player assembly 86260-30070-D (SP-401-1) 1
- —Bracket, tape player, rear 86266-30051 (RN-MBL-408) 1
- —Screw with washer 93310-15008 (RN-MCW-B5×8S) 4

SPEAKER ASSEMBLY 86160-39025 (SSB-4G8)
- —Speaker assembly, radio 86160-30100 (SB-280A) 2
- —Grille, speaker 64383-22011 (RN-MSD-96A) 2
- —Wiring sub assembly, speaker (RN-EWJ-373) 1
- —Nut, case 90950-03062 (RN-MEN-3) 4
- —Screw with washer 91656-40616 (RN-MET-138) 4
- —Nut, spring 90183-04046 (RN-MSQ-A4S) 12
- —Clamp 90463-04133 (RN-MCE-21) 3

◎ SP-530S_1

TAPE PLAYER ASSEMBLY 86260-30081 (SP-530S1)
- —Tape player assembly 86260-30081 (SP-530-1) 1
- —Bracket, tape player, rear 86260-30081 (RN-MBL-408) 1

NOTE: 1. Speaker assembly 86160-39025 (SSB-4G8) can be used only in combination with TOYOTA Part No. 86120-30222-A (AT-2125-1) radio receiver.

2. Above numbers in parenthesis denote FUJITSU TEN's numbers.

SPECIFICATIONS

	86260-30070-D (SP-401-1)	86260-30081 (SP-530-1)
NUMBER OF TRACKS	4-track 2 channels	
TAPE CARTRIDGE	Stereo/Monaural compact cassette	
TAPE SPEED	4.75cm/sec. (1⅞ i.p.s.)	
FREQUENCY RESPONSE	125Hz to 6,300Hz	
CROSSTALK	40 dB or better between adjacent tracks	
	25 dB or better between left and right channels	
WOW & FLUTTER	0.4% or less (WRMS)	
POWER OUTPUT	3.5 watts min. RMS (at T.H.D. 10%) per channel	
SPEAKER IMPEDANCE	4 ohms per channel	
POWER INPUT	12-volt battery, negative terminal to ground	
Voltage	13.2 VDC	
Current	Approx. 1 ampere (at 0.5watt output)	Approx. 0.7 ampere (at 0.5 watt output)
	Approx. 5 amperes (at solenoid action)	Approx. 4.5 amperes (at solenoid action)
TRANSISTORS & ICs.	5 transistors 3 ICs & 11 diodes	3 transistors 1 IC & 13 diodes
DIMENSIONS	165(W)×57(H)×172(D)mm (6½″, 2¼″, 6$^{25}/_{32}$″)	
WEIGHT	Player—1.95 kg (4.3 lbs.)	

NOTE: The above shows the specifications and performance for the combination with the custom-made radio receiver.

EXPLODED VIEW

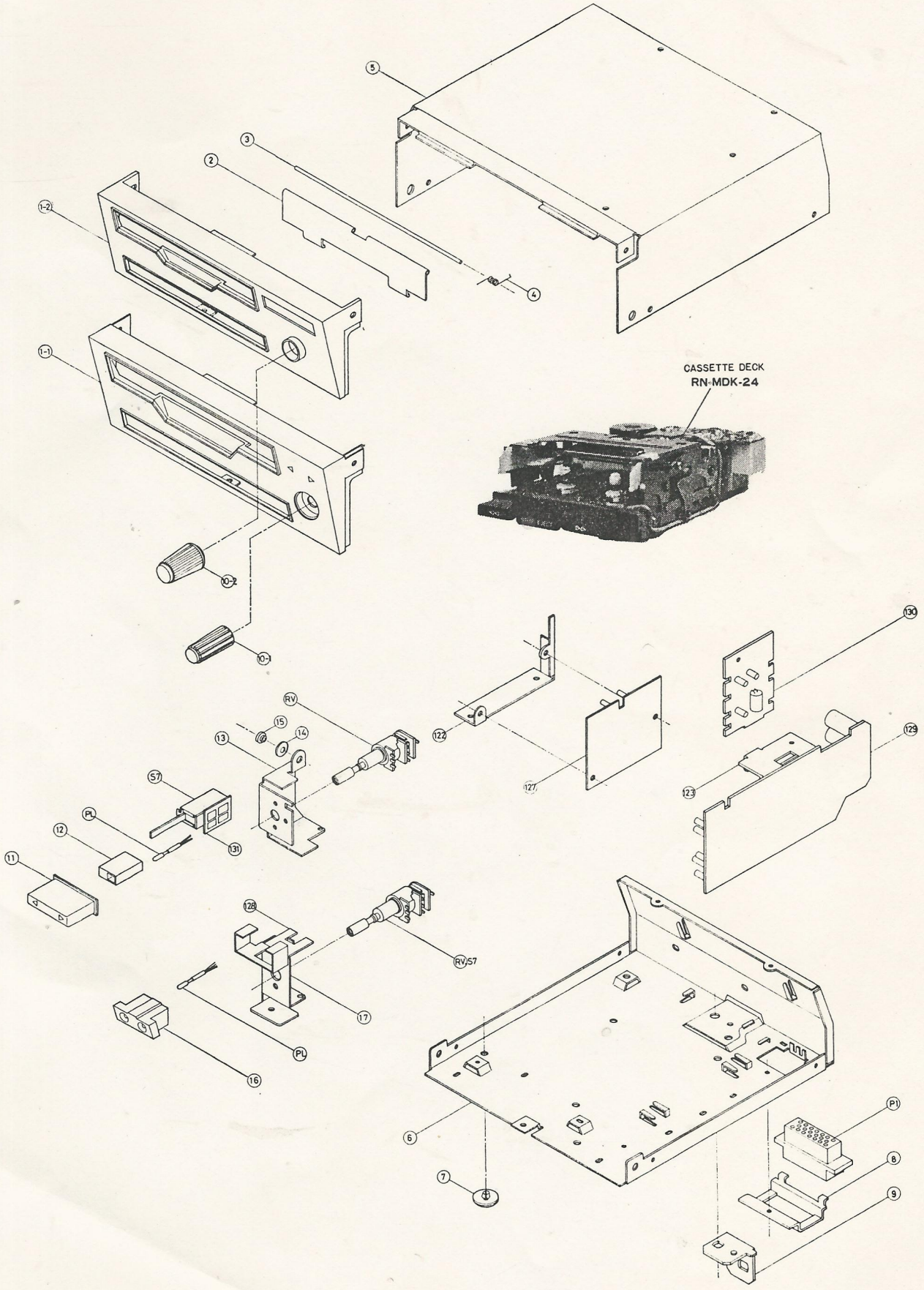

Fig. 5 (A)

REFERENCE

Alignment procedures in the factory are described below.

◎ Adjustment for pinchroller pressure

Hold a tension gauge to the pinchroller as shown in Fig. 6 (a), move the gauge as an arrow and measure the gauge at the point the pinchroller moves.

When the gauge shows under 300 gr., set the spring to A in Fig. 6 (b), and when it is more than 400 gr., set the spring to B.

Always these pressure should be between 300 and 400 gr. for both of left and right pinchrollers.

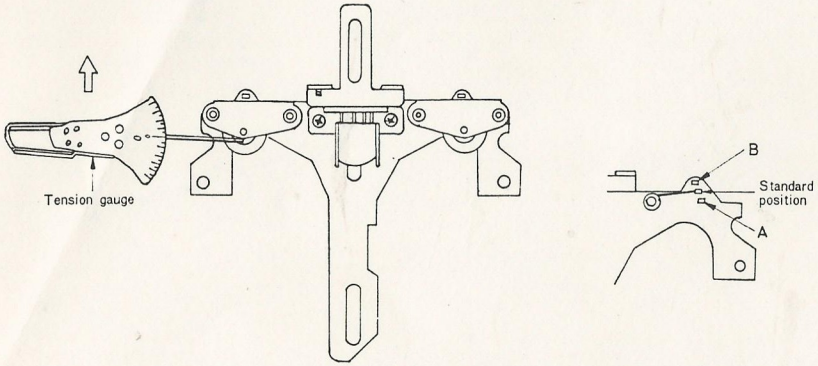

Fig. 6

◎ Adjustment for take-up torque

Measure the torque as shown in Fig. 7 (a) with motor rotated. When the torque gauge shows less than 40 gr-cm, set the spacer to the A position, and for more than 80 gr-cm, set the spacer to the B. Always the torque should be between 40 and 80 gr-cm at 13.2-volt power supply.

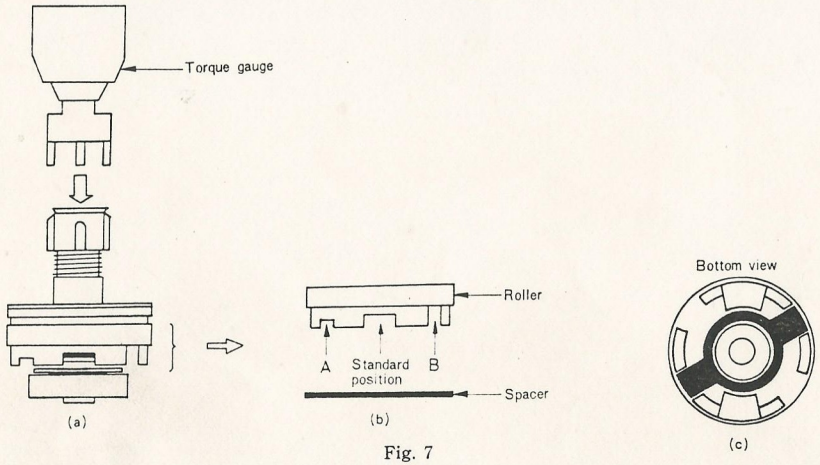

Fig. 7

PLAYBACK HEAD ADJUSTMENT (Azimuth)

Normally the adjustment is precisely set at the factory and not be required unless the playback head or its mounting components are replaced. Beware of excessive adjustment because inadequate adjustment results in inferior performance. In case the azimuth is unnecessarily varied, the angle gets out of order, which causes lowering of tonal quality. Carefully adjust the azimuth adjust screw as shown in Fig. 8.

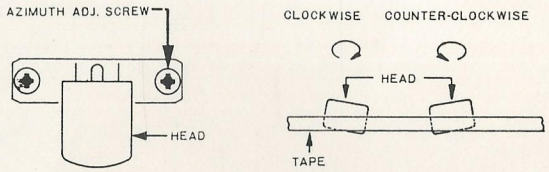

Fig. 8

* IN CASE OF USING TEST TAPE FOR AZIMUTH ADJUSTMENT

Insert a test tape for the azimuth adjustment and set the control knobs to a proper level:

VOLUME CONTROL KNOB (VOL) ..... In a proper level

BALANCE CONTROL KNOB (BAL) ..... In a center position

TONE CONTROL KNOB (TONE) ..... Treble tone (turn fully clockwise)

Carefully adjust the azimuth adjust screw for maximum volume and treble tone. It is recommended to connect a VTVM or circuit tester with the speaker terminals for obtaining the maximum value because test tape for azimuth adjustment is recorded high treble tones (6,300 Hz ordinary), and it is difficult to find the maximum volume without using test instrument. If test tape is not available, use a stereo tape with some high treble tones (piano or violin music is good for this) and follow the same procedure as outlined above.

CLEANING

After extended use the tape playback head and the drive capstan will build up a layer of iron oxide from the tape. The oxide layer in the case of the tape head prevents the tape from making full contact with the head and the result is a gradual loss of high frequency response and an increased noise level.

The oxide deposit on the capstan can cause slippage (wow) which might be mistaken for more serious mechanical drive problems.

A cleaner pen or similar object like the alcohol moistened swab is used.

First, using the end of a pencil, press the rod in the cassette door back until it gives a click sound. Rub the parts such as playback head, capstan and pinchroller thoroughly to remove all traces of dirt and grime.

After cleaning, always remember to press the eject button to return the rod to its former position.

Do not use a solvent such as lighter fuel or lacquer thinner, which may cause damag eto plastic parts or to instrument finish.

DEMAGNETIZATION

The head may become magnetized over a period of time. A magnetized head will record noise on a tape even when it is being used for playback. It is important that the head be demagnetized periodically.

The head can be demagnetized with a commercial demagnetizer (or degausser, as it is sometimes called).

Such an instrument is not expensive, and represents a good investment for the owner who wants to keep his equipment in the best possible condition.

REPLACEMENT PARTS LIST

SP-401-1	SP-530-1	Symbol No.	Stock No.	Description			
CAPACITORS							
○	○	C 1, 8, 20, 26, 43, 44, 46	RN-ECE-M100V16-1	10 μf	16V		electrolytic
○		C 2, 3, 42	RN-ECF-R223V50	.022 μf	50V		mylar
○	○	C 4, 21	RN-ECE-M4R7V25-1	4.7 μf	25V		electrolytic
○		C 5, 22	RN-ECF-R153V50	.015 μf	50V		mylar
	○	C 5, 22	RN-ECF-R223V50	.022 μf	50V		mylar
○	○	C 6, 23	RN-ECK-DYW201K	200 pf	50V		ceramic
○	○	C 7, 24	RN-ECE-M470V10-1	47 μf	10V		electrolytic
○		C 9, 29	RN-ECK-DB222K-1	.0022 μf	50V		ceramic
○		C10, 30	RN-ECE-M1R0V50	1 μf	50V		electrolytic
○		C11, 31	RN-ECE-M470V10-1	47 μf	10V		electrolytic
○		C12, 32	RN-ECE-M221V10-1	220 μf	10V		electrolytic
○		C13, 33	RN-ECC-DSL201K-1	200 pf	50V		ceramic
○		C15, 35, 48, 49	RN-ECF-R683V50	.068 μf	50V		mylar
○		C16, 36	RN-ECE-M101V10-1	100 μf	10V		electrolytic
○		C17, 18, 19, 37	RN-ECE-M471V16-1	470 μf	16V		electrolytic
○	○	C25, 47	RN-ECE-M221V16-1	220 μf	16V		electrolytic
○		C27	RN-ECB-DBC104B	.1 μf	12V		ceramic
○		C28, 41	RN-ECE-M100V16-1	10 μf	16V		electrolytic
○		C38, 40	RN-ECE-M4R7V25	4.7 μf	25V		electrolytic
○		C39	RN-ECE-M221V16-1	220 μf	16V		electrolytic
○	○	C45	RN-ECE-M101V10-1	100 μf	10V		electrolytic
RESISTORS & CONTROLS							
○		R 1	RN-ERD-AE153J	15k ohm	¼W	5%	carbon
○		R 2	RN-ERD-AE183J	18k ohm	¼W	5%	carbon
○		R 3, 8	RN-ERD-AE333J	33k ohm	¼W	5%	carbon
○		R 4, 9	RN-ERD-AE123J	12k ohm	¼W	5%	carbon
	○	R 4, 9	RN-ERD-AE822J	8.2k ohm	¼W	5%	carbon
○		R 5, 10, 16, 21	RN-ERD-AE154J	150k ohm	¼W	5%	carbon
	○	R 5, 10	RN-ERD-AE104J	100k ohm	¼W	5%	carbon
○		R 6, 13	RN-ERD-AE103J	10k ohm	¼W	5%	carbon
	○	R 6, 13	RN-ERD-AE472J	4.7k ohm	¼W	5%	carbon
○		R 7, 15	RN-ERD-AE101J	100 ohm	¼W	5%	carbon
○	○	R11	RN-ERD-AE153J	15k ohm	¼W	5%	carbon
○	○	R12, 30, 32	RN-ERD-AE102J	1k ohm	¼W	5%	carbon
○		R14	RN-ERD-AE822J	8.2k ohm	¼W	5%	carbon
○		R17	RN-ERD-AE223J	22k ohm	¼W	5%	carbon
○		R18, 19	RN-ERD-AE472J	4.7k ohm	¼W	5%	carbon
○		R20, 23, 24	RN-ERD-AE102J	1k ohm	¼W	5%	carbon
○	○	R25, 26, 29	RN-ERD-AE222J	2.2k ohm	¼W	5%	carbon
○	○	R27	RN-ERD-AE333J	33k ohm	¼W	5%	carbon
○	○	R28	RN-ERD-AE123J	12k ohm	¼W	5%	carbon
○	○	R31, 35, 37	RN-ERD-AE103J	10k ohm	¼W	5%	carbon
○	○	R33	RN-ERD-AE271J	270 ohm	¼W	5%	carbon
○	○	R34	RN-ERD-AE220J	22 ohm	¼W	5%	carbon
○	○	R36	RN-ERD-AE332J	3.3k ohm	¼W	5%	carbon
○	○	R38	RN-ERC-AF2R2K	2.2 ohm	½W	10%	solid
○		RV 1, 2	RN-ERV-1N2-128	Control, volume 10k ohm			variable resistor
○	○	RV 1, 2	RN-ERK-1P2-10	Control, fader 22 ohm			variable resistor

SP-401-1	SP-530-1	Symbol No.	Stock No.	Description
TRANSISTORS, IC's & DIODES				
○	○	Q 1, 2, 3	RN-EVS-2SC828-QR	Mix. amp., subsidiary, relay control, silicon
○	○	Q 3	RN-EVS-2SA495-OY	Auto eject, silicon
○	○	Q 4	2SC1247A-VS	Relay control, silicon
○	○	IC 1	RN-EIC-TA7108P	Pre-amp. linear-monolithic
○		IC 2, 3	RN-EIC-TA7201P-BCD	Audio, power output, linear-monolithic
○	○	D 1, 2, 3, 4, 5, 6, 7, 9	RN-EDS-ITT73N	Tone, compensator, silicon
○	○	D 8, 10, 11	RN-EDS-1S1885	Relay, spark suppression, silicon
MISCELLANEOUS ELECTRICAL				
○	○	A 1	RN-EHM-C44-26	Playback head
○	○	E 1	RN-EEM-15	Solenoid
	○	PL 1	RN-EPL-67-2	Lamp
○		PL 1	RN-EPL-67-3	Lamp
○	○	PL 2	RN-EPL-67-4	Lamp
○	○	M 1	RN-EDM-23	DC motor
○	○	PY 1	RN-EED-30/AA	DC relay, includes S_{10}
○		P 1	RN-EWJ-657	Cable, 20P, connecting
	○	P 1	RN-EWJ-658	Cable, 20P, connecting
○	○	S 1~4	RN-ESS-42-115	Slide switch, program selector
○	○	S 5, 6	RN-ESL-153A	Leaf switch, auto reverse
	○	S 7	RN-ESB-2N2-140	Push switch, program selector
	○	S 8, 9	RN-ESM-105A	Micro switch, radio and tape changing
○	○		RN-EWJ-349	Cable, playback head, gray
○	○		RN-EWJ-348	Cable, playback head, red
○	○		RN-EWJ-350A	Cable, wiring
○	○		RN-EWJ-407A	Cable, S_5 and S_6

SP-401-1	SP-530-1	Illus. No.	Stock No.	Description
CHASSIS & STYLING				
	○	1 — 1	RN-MDP-159	Escutcheon
○		1 — 2	RN-MDP-160	Escutcheon
○	○	2	RN-MCV-45	Door, cartridge slot
○	○	3	RN-MSI-162	Shaft, for ill. ②
○	○	4	RN-MSC-157A	Spring, for ill. ②
○	○	5	RN-MAD-189A	Cover, top
	○	6	RN-MAD-187A	Cover, bottom
○		6	RN-MAD-188A	Cover, bottom
○	○	7	RN-MSS-41A	Spacer
○	○	8	RN-MHE-289	Supporter, P_1
○	○	9	RN-MBL-408	Bracket, radio and tape mounting
	○	10— 1	RN-MYB-156	Knob, fader control
○		10— 2	RN-MYN-145	Knob, volume control
○		11	RN-MYB-118	Button, program
○		12	RN-MST-107	Spacer, lamp
○		13	RN-MHE-295	Supporter, volume control
○		14	RN-MWP-61	Washer, for ill. S_7
○		15	RN-MSH-34	Spacer, for ill. S_1
	○	16	RN-MST-107	Supporter, lamp
	○	17	RN-MHE-456	Supporter, volume control
○	○	18	RN-MHG-30	Cover, for ill. ⑲, ⑳ and ㉑
○	○	19	RN-MYB-158	Button, fast forward (right)
○	○	20	RN-MYB-159	Button, stop and eject
○	○	21	RN-MYB-160	Button, fast forward (left)
○	○	22	RN-MIP-69	Insulator
CASSETTE DECK				
○	○	23	RN-MAS-63A	Chassis, tape deck
○	○	24	RN-MSI-156	Spring, for ill. ㉕
○	○	25	RN-MUL-99	Lever, stop and eject
○	○	26	RN-MSC-141	Spring, for ill. ㉕
○	○	27	F6-ER-1.2	E type ring, snap (for 1.2mm shaft)
○	○	28	RN-MHL-152	Supporter
○	○	29	F6-ER-2	E type ring, snap (for 2mm shaft)
○	○	30	RN-MSI-155B	Shaft
○	○	31	RN-MUL-97	Lever
○	○	32	RN-MUL-98B	Lever, solenoid
○	○	33	RN-MSC-205	Spring, for ill. ㉜
○	○	34	F6-ER-1.2	E type ring, snap (for 1.2mm shaft)
○	○	35	F6-ER-1.5	E type ring, snap (for 1.5mm shaft)
○	○	36	F6-ER-2	E type ring, snap (for 2mm shaft)
○	○	37	RN-MHF-62	Supporter, for ill. ㉞
○	○	38	RN-MUC-13A	Cam, fast forward/rewind selector
○	○	39	RN-MWS-87	Washer, 4mm
○	○	40	F6-ER-3	E type ring, snap (for 3mm shaft)
○	○	41	RN-MSC-139	Spring, for ill. ㊳
○	○	42	RN-MUL-96	Lever, fast forward
○	○	43	F6-ER-1.5	E type ring, snap (for 1.5mm shaft)
○	○	44	RN-MSP-99	Spring, slip mechanism
○	○	45	RN-MYT-13A	Slide plate, head and pinchroller mounting

SP-401-1	SP-530-1	Illus. No.	Stock No.	Description
○	○	46	RN-MSC-215	Spring, for ill. ㊺
○	○	47	RN-MWS-111	Washer, for ill. ㊺
○	○	48	RN-MWS-87	Washer, for ill. ㊺
○	○	49	F6-ER-3	E type ring, snap (for 3mm shaft)
○	○	50	RN-MSC-138	Spring, for ill. ㊽
○	○	51	RN-MSC-137	Spring, for ill. ㊻
○	○	52	RN-MSC-136	Spring, azimuth adjusting
○	○	53	RN-MWS-102	Washer
○	○	54	F6-ER-2	E type ring, snap (for 2mm shaft)
○	○	55	RN-MKR-2A	Pinchroller assy., right
○	○	56	RN-MKR-3A	Pinchroller assy., left
○	○	57	RN-MWP-35	Washer
○	○	58	F6-ER-1.5	E type ring, snap (for 1.5mm shaft)
○	○	59	RN-MHF-61A	Supporter
○	○	60	RN-MKI-3	Cassette loading mechanism, right
○	○	61	RN-MKI-4	Cassette loading mechanism, left
○	○	62	RN-MRP-126	Cap
○	○	63	F6-ER-2	E type ring, snap (for 2mm shaft)
○	○	64	F6-ER-2	E type ring, snap (for 2mm shaft)
○	○	65	RN-MUL-112	Lever
○	○	66	RN-MUL-117	Lever, for ill. ㊶ and ㊸ coupling
○	○	67	RN-MSC-164	Spring, for ill. ㊺
○	○	68	F6-ER-2	E type ring, snap (for 2mm shaft)
○	○	69	RN-MSC-151	Spring
○	○	70	F6-ER-3	E type ring, snap (for 3mm shaft)
○	○	71	RN-MUL-115	L-shaped lever, right
○	○	72	RN-MUL-114	T-shaped lever, right
○	○	73	RN-MSE-83	Spacer, for ill. ㊺ coupling
○	○	74	RN-MSE-84A	Spacer, for ill. ㊷ coupling
○	○	75	RN-MYT-15A	Sub chassis, cassette loading
○	○	76	RN-MUL-118	L-shaped lever, left
○	○	77	RN-MUL-113	T shaped lever, left
○	○	78	RN-MUL-125	Lever, for ill. ㊻ and ㊼ coupling
○	○	79	RN-MUL-100	Lever, left forward
○	○	80	RN-MUL-102A	Lever, stop and eject
○	○	81	RN-MUL-101	Lever, right fast forward
○	○	82	F6-ER-2	E type ring, snap (for 2mm shaft)
○	○	83	RN-MWS-110	Washer
○	○	84	RN-MSC-143	Spring, for ill. ㊹
○	○	85	F6-ER-3	E type ring, snap (for 3mm shaft)
○	○	86	F6-ER-4	E type ring, snap (for 4mm shaft)
○	○	87	RN-MSC-142A	Spring, for ill. ㊸ and ㊵
○	○	88	RN-MUL-104	Lever
○	○	89	RN-MUL-103A	Lever
○	○	90	RN-MUL-105	Lever
○	○	91	RN-MUL-106A	Lever
○	○	92	RN-MSC-144	Spring
○	○	93	F6-ER-2	E type ring, snap (for 2mm shaft)
○	○	94	RN-MUL-107	Lever, left forward idler
○	○	95	RN-MRP-120	Roller, for ill. ㊾ and ㊿
○	○	96	RN-MWS-87	Washer

SP-401-1	SP-530-1	Illus. No.	Stock No.	Description
○	○	97	F6-ER-3	E type ring, snap (for 3mm shaft)
○	○	98	F6-ER-1.5	E type ring, 1.5mm
○	○	99	RN-MUL-108	Lever, right forward idler
○	○	100	RN-MSC-145	Spring, for ill. ⑭ and ⑲
○	○	101	RN-MYT-46	Sub chassis, slip mechanism and idler mounting
○	○	102	RN-MRP-119	Roller, belt
○	○	103	F6-ER-1.5	E type ring, snap (for 1.5mm shaft)
○	○	104	RN-MWP-35	Washer
○	○	105	RN-MWP-117	Roller, for ill. ⑯
○	○	106	F6-SHT-2×3	Screw, 2×3mm
○	○	107	RN-MUL-109	Lever, left fast forward idler
○	○	108	RN-MRP-121	Roller, for ill. ⑰ and ⑲
○	○	109	RN-MUL-110	Lever, right fast forward idler
○	○	110	RN-MWS-87	Washer
○	○	111	F6-ER-3	E type ring, snap (for 3mm shaft)
○	○	112	F6-ER-1.5	E type ring, snap (for 1.5mm shaft)
○	○	113	RN-MSC-146	Spring, for ill. ⑰ and ⑲
○	○	114	RN-MSC-147	Spring, for ill. ⑮
○	○	115	RN-MUL-111	Brake, slip mechanism
○	○	116	RN-MUF-19	Flywheel
○	○	117	RN-MUB-21	Belt, drive
○	○	118	RN-MRP-132	Cap, for ill. ⑲
○	○	119	RN-MKS-5	Slip mechanism
○	○	120	RN-MSH-33	Supporter, for ill. ⑱
○	○	121	RN-MRP-152	Pulley, motor

SP-401-1	SP-530-1	Illus. No.	Stock No.	Description	Q'ty
MISCELLANEOUS PARTS					
	○	122	RN-MHE-296	Supporter, PC board mounting	1
○		123	RN-MRE-75A	Radiator, IC_2 and IC_3	1
○	○	124	RN-MPM-491A	PC board, auto reverse	1
○	○	125	RN-MPM-467	PC board, S_1—S_4	1
○	○	126	RN-MPM-536	PC board, S_5 and S_6	1
	○	127	RN-MPM-381A	PC board, pre. amp.	1
	○	128	RN-MPM-591	PC board, PL_1 and PL_2	1
○		129	RN-MPM-382A	PC board, pre. amp. and main	1
○		130	RN-MPM-383A	PC board, mix. amp.	1
○		131	RN-MPM-385	PC board, PL_1 and PL_2	1
○	○	132	RN-MCC-44	Clamp, wiring	2
	○		RN-MCF-6	Clamp, head cord	2
○			RN-MCF-6	Clamp, head cord	1
○	○		RN-MCF-10	Clamp	1
	○		F6-WB-3S	Washer, IC_2 and IC_3 mounting 3mm	1
○	○		F6-WB-2S	Washer, 2mm	1
○	○		F6-SBD-2.3×10BS	Screw, micro switch mounting, 2.3×10mm	4
○	○		F6-SBD-2.6×4S	Screw, for ill. ⑧	5
○	○		F6-SBD-2.6×3S	Screw, 2.6×3mm	4
○	○		F6-SBD-2×4S	Screw, 2×4mm	8
○			F6-SBD-2.6×6S	Screw, 2.6×6mm	1

SP-401-1	SP-530-1	Illus. No.	Stock No.	Description	Q'ty
○	○		F6-SBD-3×4S	Screw, RN-MDK-24 mounting	4
	○		F6-SBD-3×6S	Screw, 3×6mm	19
○			F6-SBD-3×6S	Screw, 3×6mm	18
○	○		F6-SAKT-2×3	Screw, for ill. ㉑ 2×3mm	1
○	○		F6-SBD-3×5S-M-N1	Screw, 3×5mm	2
○	○		F6-SSA-2×4S	Screw, 2×4mm	8
○	○		F6-SSA-2.6×5S	Screw, 2.6×5mm	5
○	○		F6-SSA-3×6S	Screw, 3×6mm	2
○	○		F6-SNA-3×4S	Screw, 3×4mm	1
○	○		F6-WH-2S	Washer, 2mm	1
○	○		RN-MCW-B3×8S	Screw with washer, IC_2 and IC_3 mounting, 3×8mm	4
○			F6-N1-3BS	Nut, IC_2 and IC_3 mounting, 3mm	4
SPEAKER UNIT					
○			RN-ESP-18EA-44	Speaker, 12×18cm, 4 ohm 5W	1
○			RN-MHW-17	Net, speaker	1

NOTE: Specifications subject to change without prior notice

SCHEMATIC (SP-401-1)

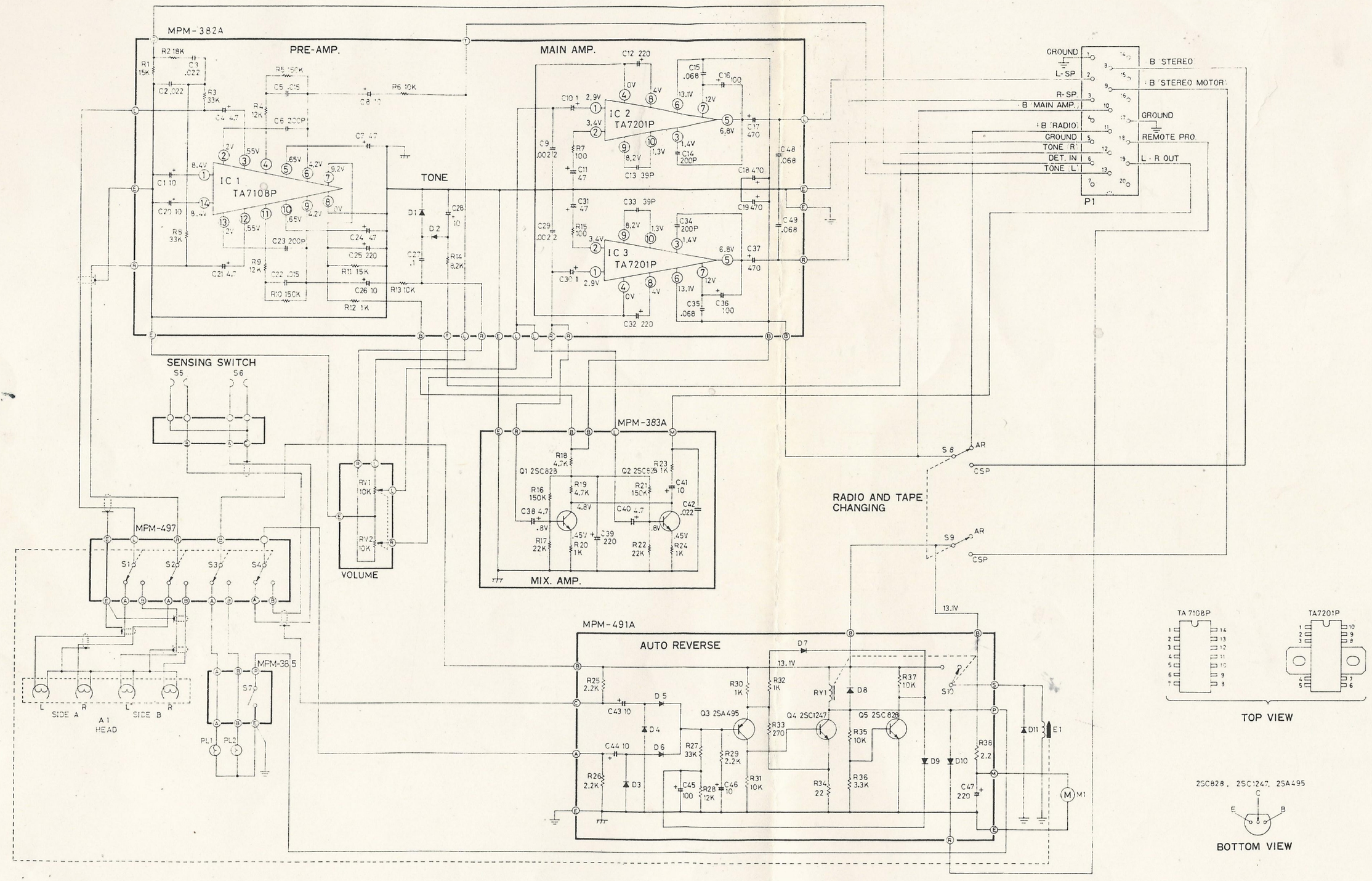

NOTE: 1. All resistance in ohms, K=1,000

2. All capacitance in μF, P=$\mu\mu$F

3. DC voltages against the chassis measured with 25,000 ohm per volt meter, power supply set at +13.2 VDC, no signal input.

Fig. 1

WIRING ON PC BOARD (SP-401-1)

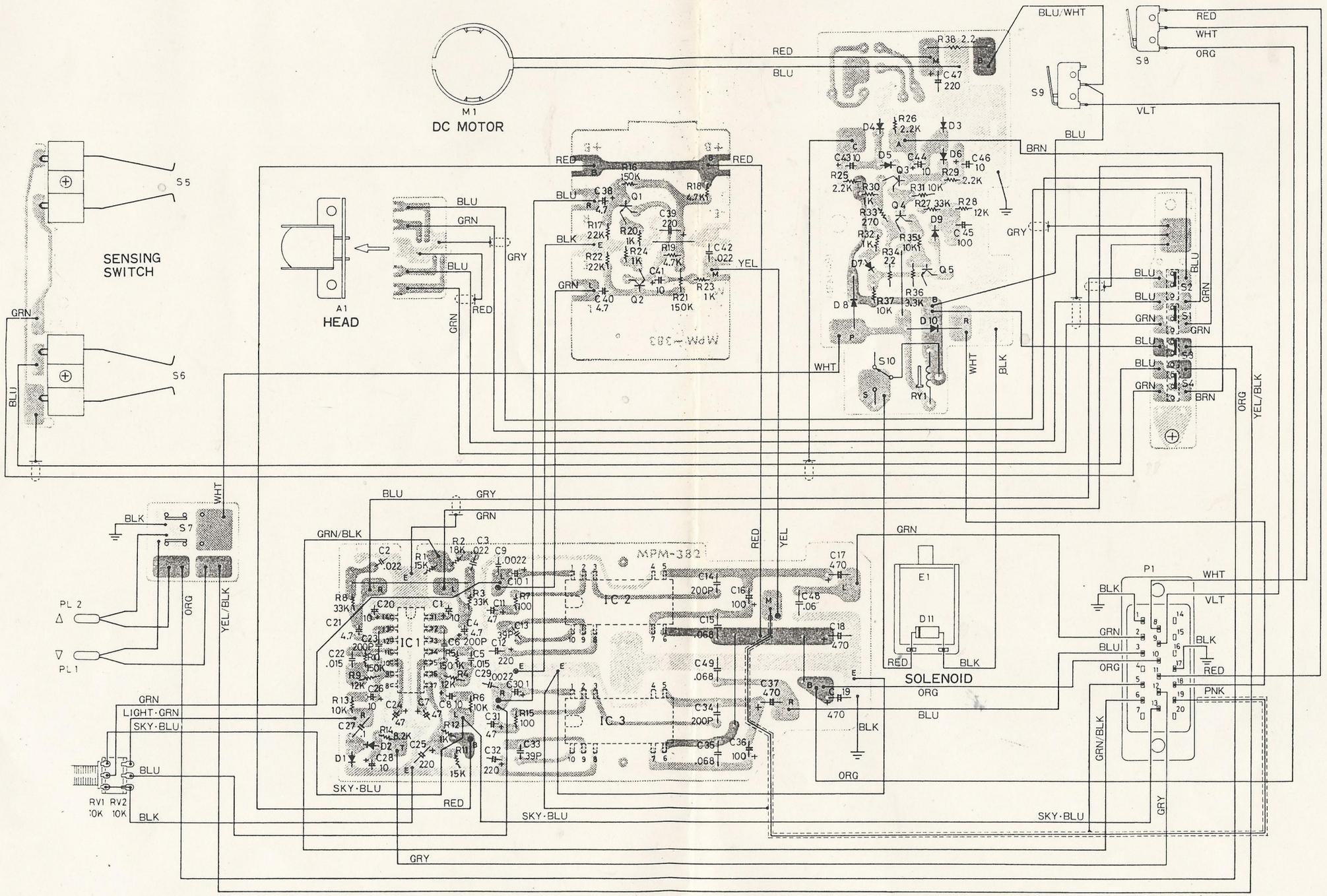

Fig. 2

NOTE:
1. All resistance in ohms, K=1,000
2. All capacitance in μF, P=$\mu\mu$F
3. DC voltages against the chassis measured with 25,000 ohm per volt meter, power supply set at +13.2 VDC, no signal input.

IC \ Pin No.	1	2	3	4	5	6	7	8	9	10	11	12	13	14
IC 1	8.4V	2V	.55V	0V	.65V	4.2V	9.2V	0V	4.2V	.65V	0V	.55V	2V	8.4V
IC 2, 3	2.9V	3.4V	1.4V	0V	6.8V	13.1V	12V	4V	8.2V	1.3V	/	/	/	/

TRANSISTOR	BASE	EMITTER	COLLECTOR
Q 1, 2	.8V	.45V	4.8V

SCHEMATIC (SP-530-1)

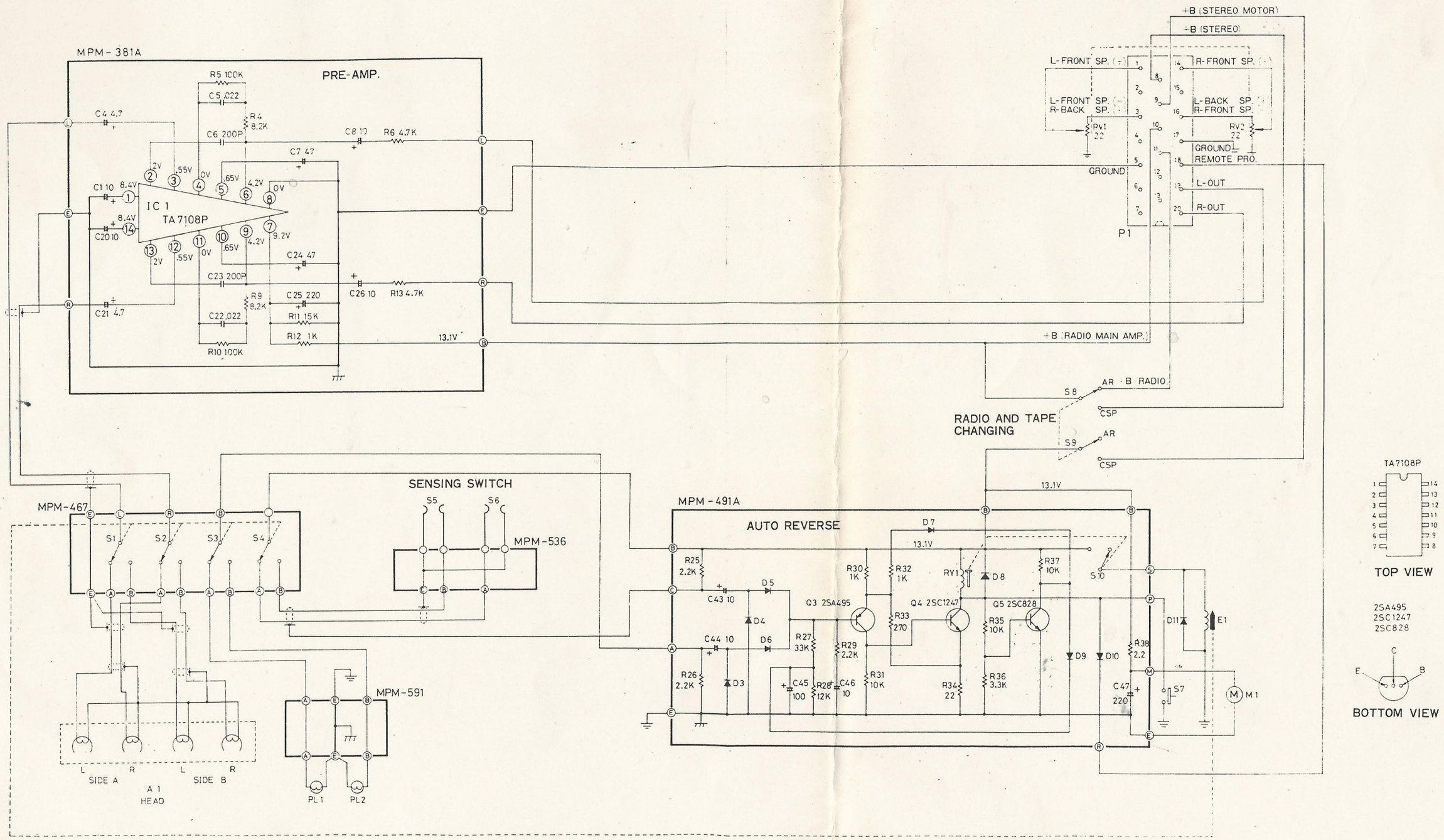

NOTE: 1. All resistance in ohms, K=1,000

2. All capacitance in μF, P=$\mu\mu$F

3. DC voltages against the chassis measured with 25,000 ohm per volt meter, power supply set at +13.2 VDC, no signal input.

Fig. 3

WIRING ON PC BOARD (SP-530-1)

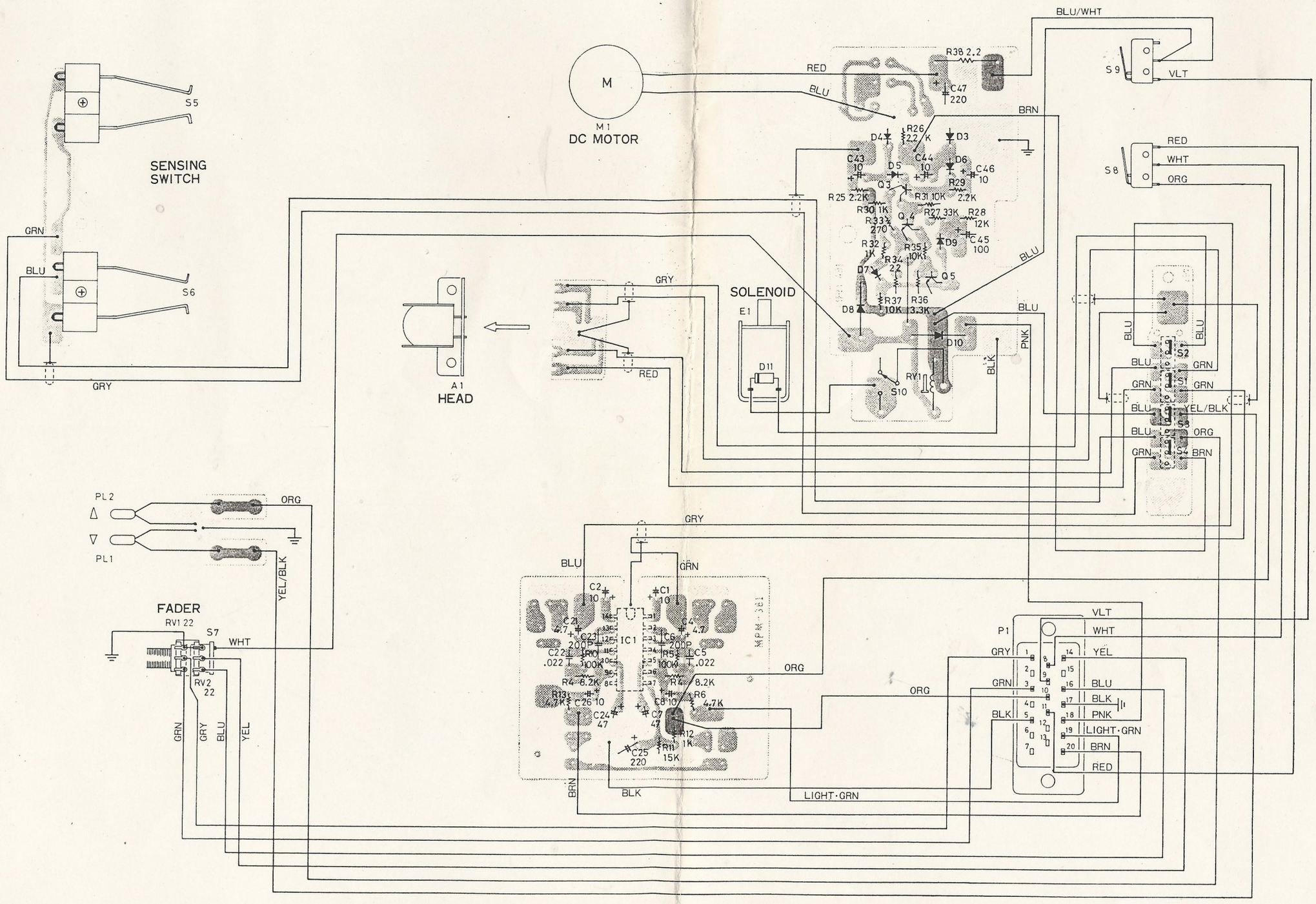

Fig. 4

NOTE:
1. All resistance in ohms, K=1,000
2. All capacitance in μF, P=$\mu\mu$F
3. DC voltages against the chassis measured with 25,000 ohm per volt meter, power supply set at +13.2 VDC, no signal input.

Pin No. / I C	1	2	3	4	5	6	7	8	9	10	11	12	13	14
I C 1	8.4V	2V	.55V	0V	.65V	4.2V	9.2V	0V	4.2V	.65V	0V	.55V	2V	8.4V

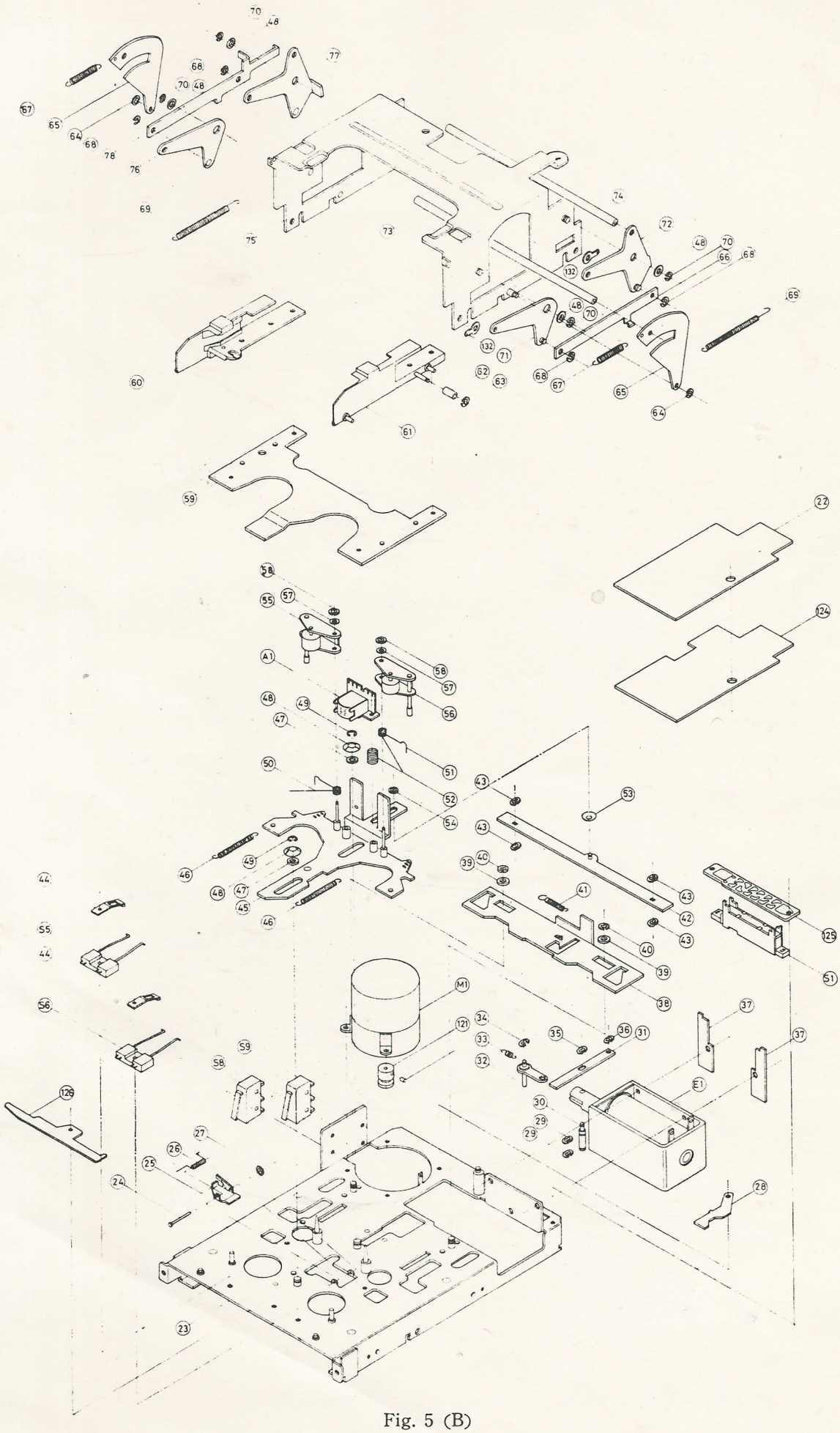

Fig. 5 (B)

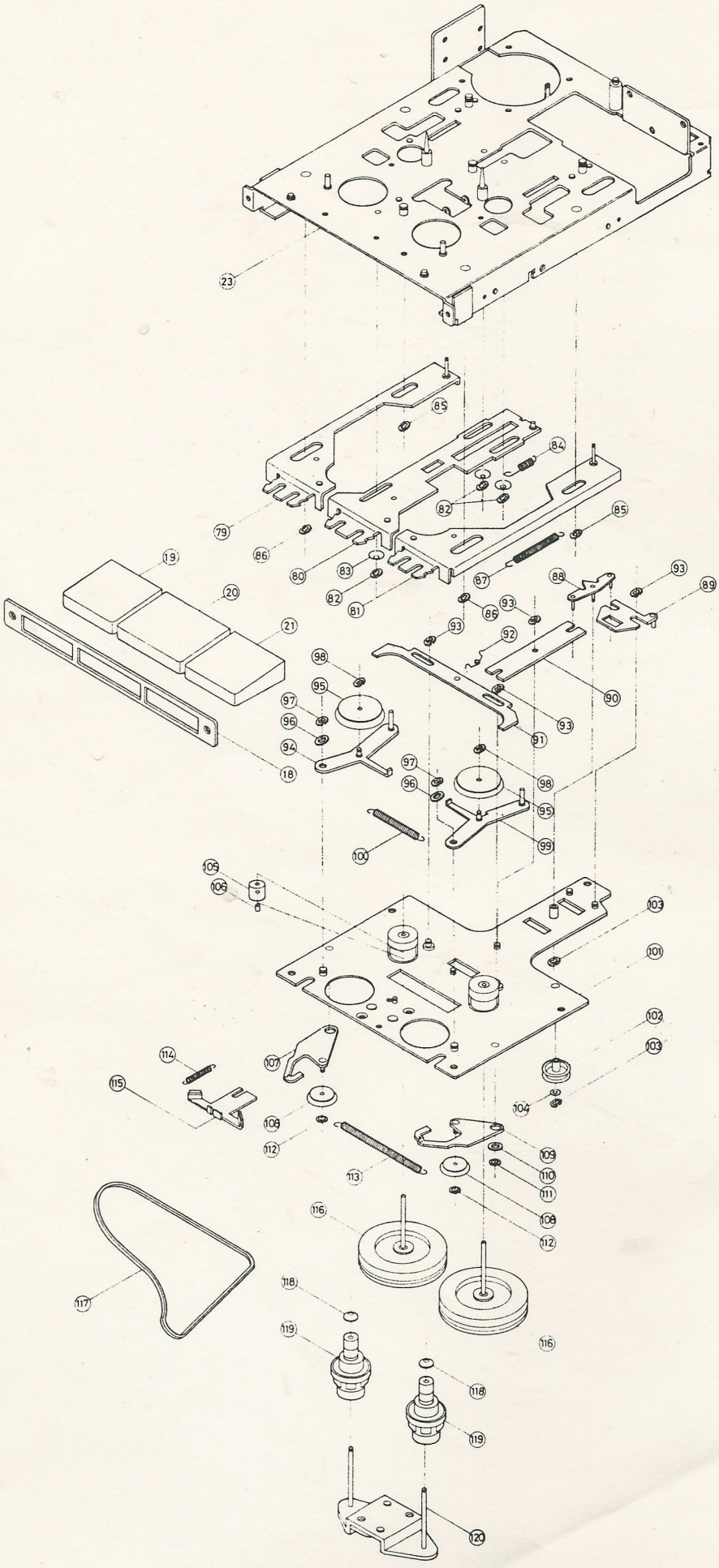
23
85
84
82
85
79
86
80
83
82
81
87
88
93
89
19
20
21
86
93
93
92
98
95
97
96
94
18
90
93
91
97
96
98
95
99
100
105
106
103
101
102
103
114
107
115
104
108
112
113
109
110
111
108
112
116
117
118
119
116
118
119
120

Fig. 5 (C)