SP-3910 EX1

"TEN" SERVICE MANUAL

CASSETTE TAPE PLAYER

SP-3910EX1

COMPOSITIONS

CASSETTE TAPE PLAYER (SP-3910EX1)	—Player unit	SP-3910	1
	—Bracket	RN-MBU-144	1
	—Bracket	RN-MBF-11	1
	—Wiring sub-assembly	RN-EWJ-416	1
	—Bolt with washer	RN-MBW-C5×8S-M-ZN2A	5
	—Bolt with washer	RN-MET-144	3
	—Tapping screw	RN-MTN-A6×16	1
	—Nut	F6-N1-6S	3
	—Washer	F6-WM-6S	3
	—Owner's Manual	RN-MXK-167	1

FUJITSU TEN LIMITED

SPECIFICATIONS

NUMBER OF TRACKS ····· 4-track 2-channel
TAPE CARTRIDGE ····· Stereo/Monaural compact cassette
TAPE SPEED ····· 4.76 cm/sec.
WOW & FLUTTER ····· 0.25% or less (WRMS)
CROSSTALK ····· 40 dB or better
SEPARATION ····· 30 dB or better
SIGNAL TO NOISE RATIO ····· 43 dB or better
FREQUENCY RESPONSE ····· 125 Hz: 0^{+3}_{-4} dB 8 kHz: 0^{+3}_{-8} dB (at 1 kHz)
SPEAKER IMPEDANCE ····· 4 ohm per channel
POWER OUTPUT ····· 4 watts min. RMS (at T.H.D.=10%) per channel
POWER INPUT ····· 12-volt car battery, negative terminal to ground
Voltage ····· 13.2 VDC
Current ····· Approx. 0.5A (0.5W×2 output) Max. 1.5A
SEMICONDUCTOR ····· 1 diodes, 2 transistors, 2 ICs, 2 LEDs
DIMENSIONS ····· 150(W)×50(H)×148(D)mm
WEIGHT ····· 0.92 kg

CONNECTIONS (REAR VIEW)

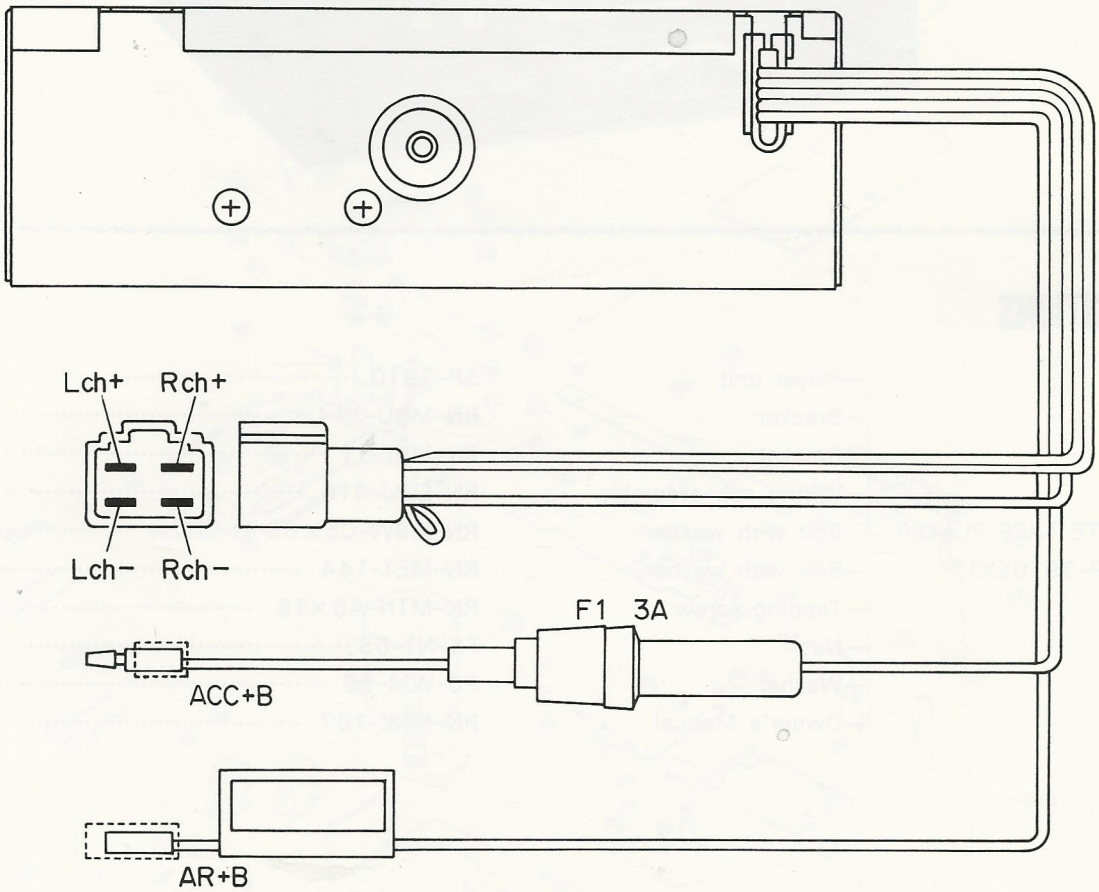

Fig. 1 (C23273900)

ADJUSTMENT FOR PLAYBACK HEAD (Azimuth)

Normally the playback head is precisely aligned at the factory and further adjustment should not be required unless the playback head or its mounting components are replaced. Beware of excessive adjustment, because improper adjustment results in inferior performance. If the azimuth is unnecessarily varied, the angle gets out of order, which cause lowering of tonal quality. Carefully adjust the azimuth sdjust screw as shown in Fig. 2.

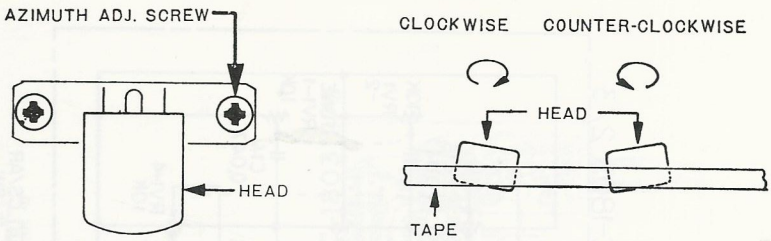

Fig. 2

* IN CASE OF USING TEST TAPE FOR AZIMUTH ADJUSTMENT

Insert a test tape for the azimuth adjustment and set the control knob to a proper level :

VOLUME CONTROL KNOB (VOL)..... In a proper level

BALANCE CONTROL KNOB (BAL) ..... In a center position

TONE CONTROL KNOB (TONE) ..... Treble tone

Carefully adjust the azimuth adjust screw for maximum volume and treble tone. It is recommended that you connect a VTVM or circuit tester with the speaker terminals for obtaining the maximum value because test tape for azimuth adjustment is recorded high treble tones (10 kHz ordinary), and it is difficult tofind the maximum volume without using test instrument. If test tape is not available, use a stereo tapewith some high treble tones (piano or violin music is good for this) and follow the same procedure as outlined above.

CLEANING

After extended use, the tape playback head and the drive capstan will build up a layer of iron oxide from the tape. The iron oxide layer on the tape head prevents the tape from making full contact with the head and the result is a gradual loss of high frequency response and an increased noise level.

The oxide deposit on the capstan can cause slippage (wow) which might be mistaken for more serious mechanical drive problems.

A cleaner pen or similar object like the alcohol moistened swab is used.

First, using the end of a pencil, press the rod in the cassette door back until it gives a click sound.

Rub the parts such as playback head, capstan and pinchroller thoroughly to remove all traces of dirt and grime.

After cleaning, always remenber to press the eject button to return the rod to former position.

Do not use a solvent such as lighter fuel or lacquer thinner, which may cause damage to plastic parts or to instrument finish.

DEMAGNETIZATION

The head may become magnetized over a period of time. A magnetized head will record noise on a tape even when it is being used for playback. It is important that the head be demagnetized periodically.

The head can be demagnetized with a commercial demagnetizer (or degausser, as it is sometimes called.)

Such an instrument is not expensive, and represents a good investment for the owner who wants to keep his equipment in the best possible condition.

SCHEMATIC

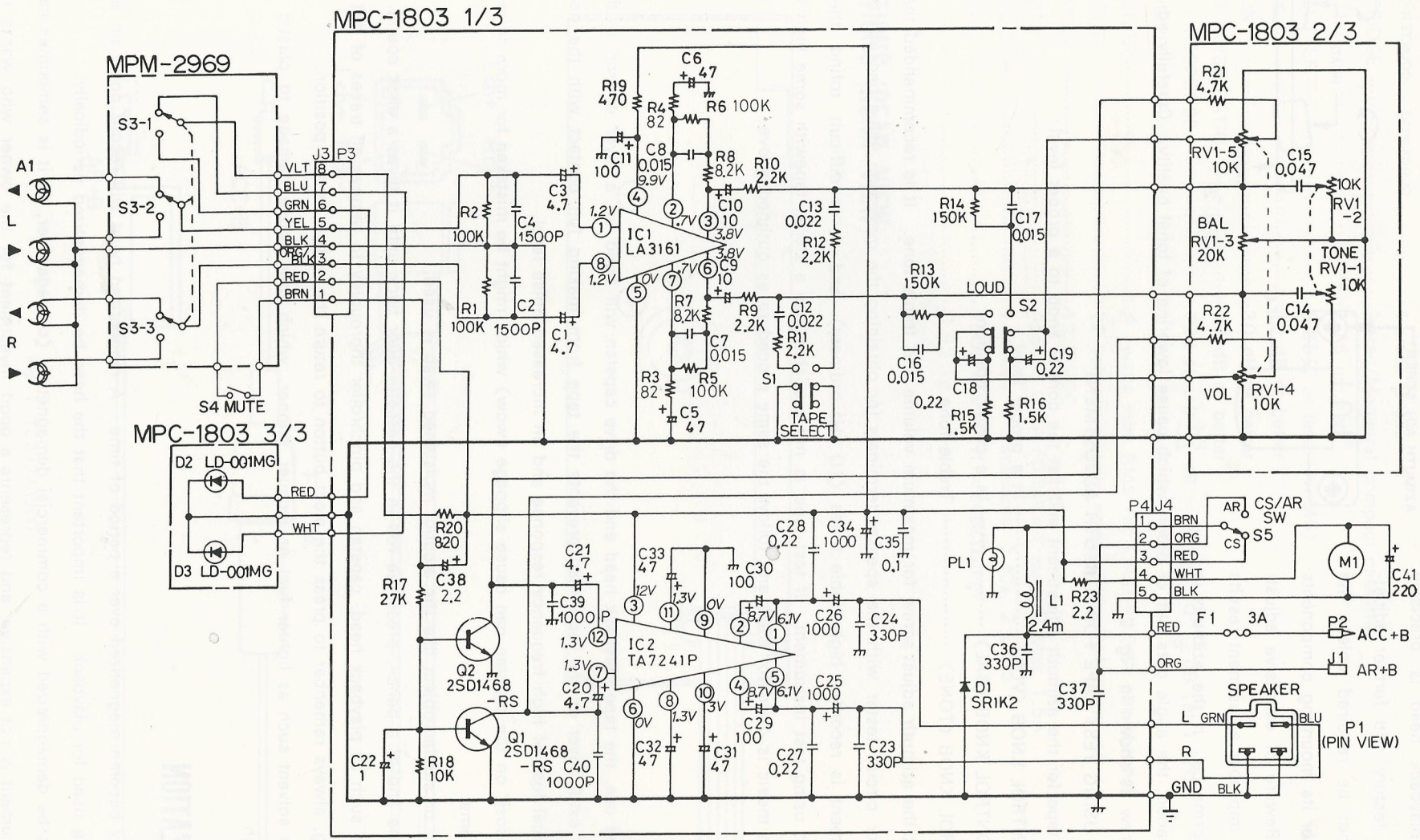

Fig. 3 (C24273910)

NOTES:
1. All capacitance in Micro farad, $P=10^{-12}$
2. All resistance in ohm, $K=10^{3}$
3. All inductance in henry, $m=10^{-3}$, $\mu=10^{-6}$
4. DC voltages against the chassis measured with 10M ohms digital volt meter, power supply set at +13.2 VDC, no signal input.

WIRING ON PC BOARDS

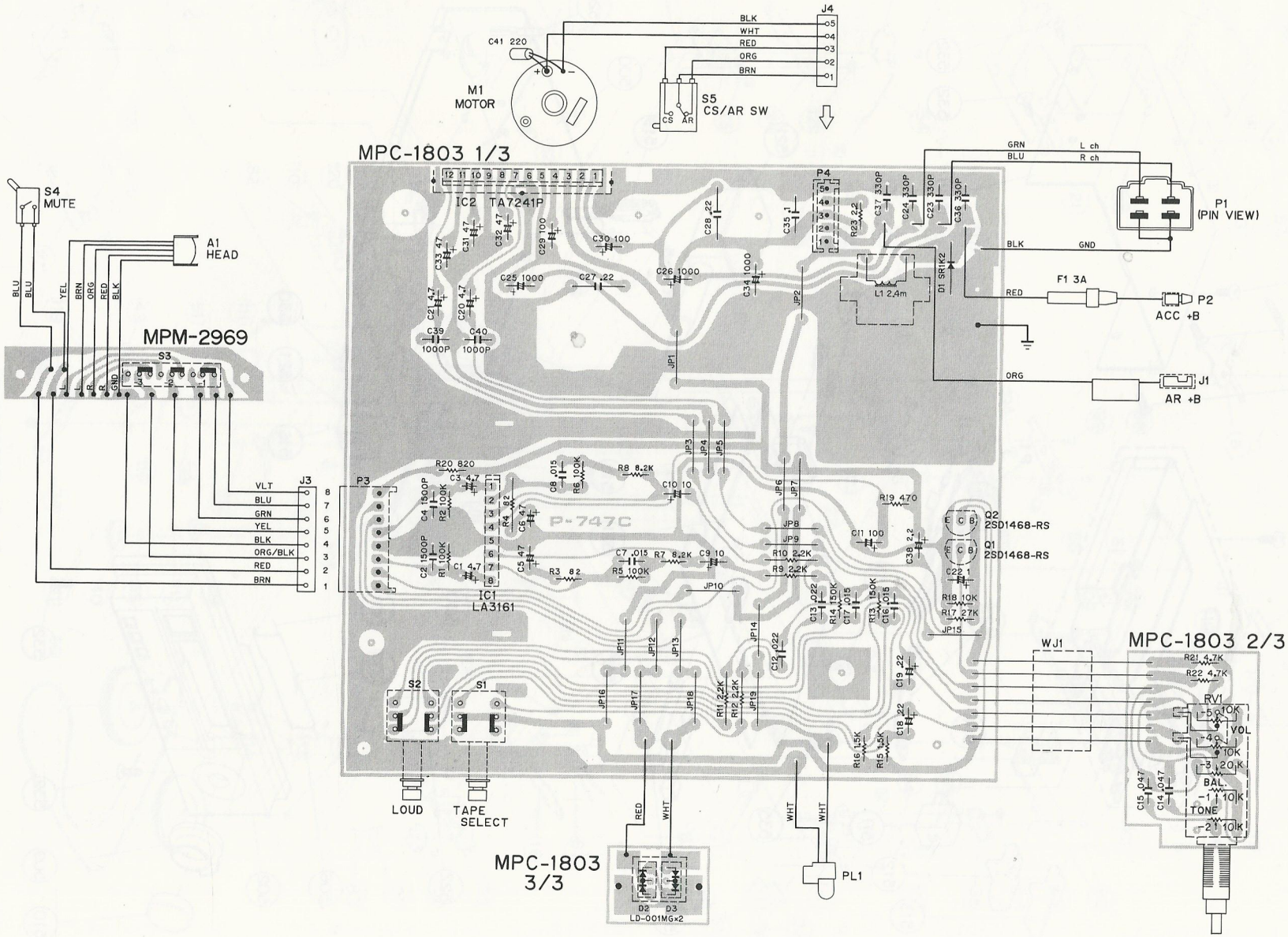

Fig. 4 (C29273910)

EXPLODED VIEW

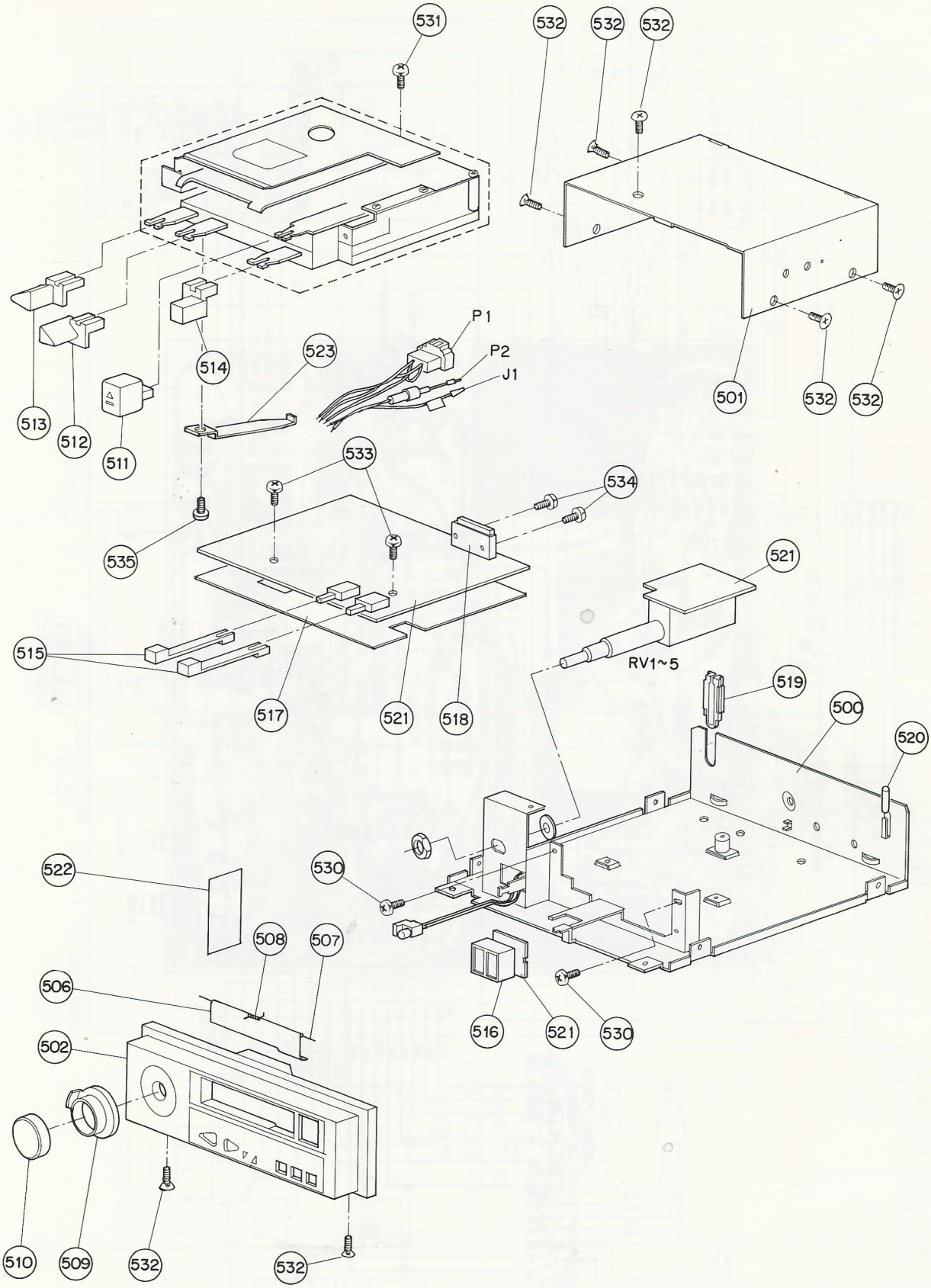

Fig. 5 (C28273910)

NOTE: Printed circuit board does not include component parts to be mounted.

EXPLODED VIEW (CASSETTE DECK MDK-67/1)

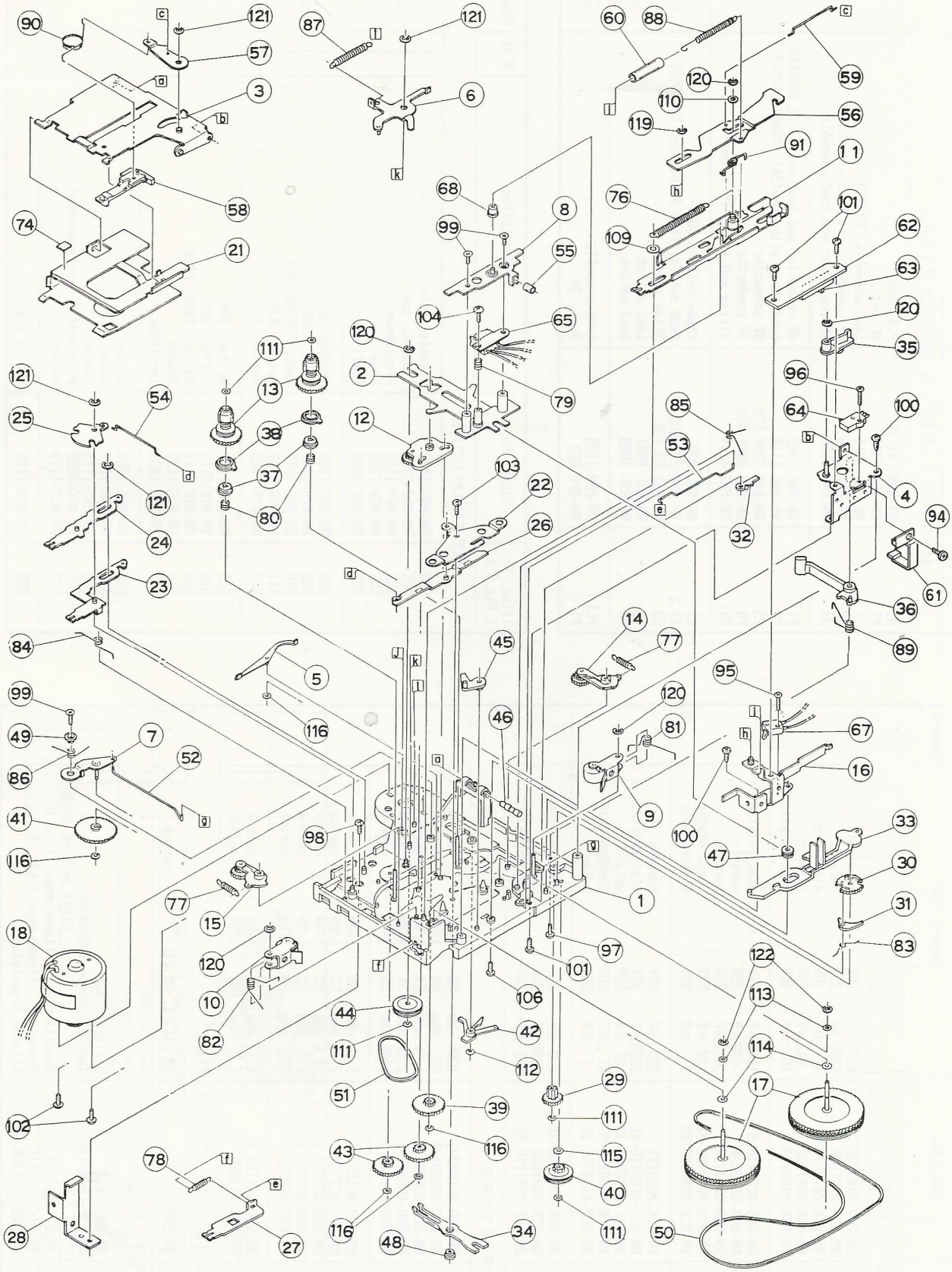

Fig. 6 (C28273910)

REPLACEMENT PARTS LIST

Note : Main replacement parts are marked ○ in the remarks column.

Symbol No. (Fig.3)	Stock No.	Description	Remark
CAPACITORS			
C1,3,20,21	RN-ECE-M4R7V50-32	4.7 μF 50V electrolytic	
C2,4	RN-ECB-DSR152E	1500 pF 25V ceramic	
C5,6	RN-ECE-M470V10-51	47 μF 10V electrolytic	
C7,8,16,17	RN-ECB-DSR153E	.015μF 25V ceramic	
C9,10	RN-ECE-M100V16-7	10 μF 16V electrolytic	
C11,29,30	RN-ECE-M101V16-9	100 μF 16V electrolytic	
C12,13	RN-ECB-DSR223E	.022μF 25V ceramic	
C14,15	RN-ECB-DSR473E	.047μF 25V ceramic	
C18,19	RN-ECE-MR22V50-32	.22 μF 50V electrolytic	
C22	RN-ECE-M1R0V50-32	1 μF 50V electrolytic	
C23,24,36,37	RN-ECK-DB331KY	330 pF 50V ceramic	
C25,26,34	RN-ECE-M102V16-41	1000μF 16V electrolytic	
C27,28	RM-ECF-R224V50-JZ	.22 μF 50V mylar	
C31~33	RN-ECE-M470V16-8	47 μF 16V electrolytic	
C35	RN-ECF-R104V50-JZ	.1 μF 50V mylar	
C38	RN-ECE-M2R2V50-32	2.2 μF 50V electrolytic	
C39,40	RN-ECB-DSR102E	1000 pF 25V ceramic	
C41	RN-ECE-M221V16-31	220 μF 16V electrolytic	
RESISTORS			
R1,2,5,6	RN-ERD-AC104J-1	100k ohm 5% 1/8W carbon	
R3,4	RN-ERD-AC820J-1	82 ohm 5% 1/8W carbon	
R7,8	RN-ERD-AC822J-1	8.2k ohm 5% 1/8W carbon	
R9~12	RN-ERD-AC222J-1	2.2k ohm 5% 1/8W carbon	
R13,14	RN-ERD-AC154J-1	150k ohm 5% 1/8W carbon	
R15,16	RN-ERD-AC152J-1	1.5k ohm 5% 1/8W carbon	
R17	RN-ERD-AC273J-1	27 k ohm 5% 1/8W carbon	
R18	RN-ERD-AC103J-1	10 k ohm 5% 1/8W carbon	
R19	RN-ERD-AC471J-1	470 ohm 5% 1/8W carbon	
R20	RN-ERD-AC821J-1	820 ohm 5% 1/8W carbon	
R21,22	RN-ERD-AC472J-1	4.7k ohm 5% 1/8W carbon	
R23	RN-ERC-AF2R2K	2.2 ohm 10% 1/2W solid	
VARIABLE RESISTORS			
RV1	RN-ERV-2N5-7	10 kΩ×4, 20 kΩ carbon	○
SEMICONDUCTORS			
D1	RN-EDS-SR1K2	Silicon diode	○
D2,3	RN-EDP-LD-001MG	Tape direction indicator, Light emiting diode	○
IC1	RN-EIC-LA3161	Equalizer-amp., linear-monolithic IC	○
IC2	RN-EIC-TA7241P	Powre-amp., linear-monolithic IC	○
Q1,2	RN-EVS-2SD1468-RS	Silicon transistor	○

Symbol No. (Fig.3)	Stock No.	Description	Remark
MISCELLANEOUS ELECTRICAL			
A1	RN-EHM-C44-75	P.B.head	○
M1	RN-EDM-1077	DC motor	○
J1	RN-EWJ-4211	Lead assembly, TO RADIO	
J3	RN-EWJ-4190	8P connector and lead assembly	
J4	RN-EWJ-4189	5P connector and lead assembly	
P1	RN-EWS-1042	4P connector and lead assy., TO SPEAKER	
P2	RN-EWP-1118	Lead assy. with fuse(3A), POWER SUPPLY	
P3	RN-EJU-S08V-579	8P connector	
P4	RN-EJU-S05V-564	5P connector	
WJ1	RN-EWJ-4191	Wiring sub-assy., PC joiner	
L1	RN-ELL-328	Choke coil, 2.4mH	
S1,2	RN-ESB-2L2-201	Push switch, TAPE SELECT and LOUDNESS	○
S3	RN-ESS-22-196	Slide switch	○
S4	RN-ESL-1041	Leaf switch	○
S5	RN-ESL-1040	Leaf switch	○
PL1	RN-EPM-1185	Lamp assembly	○
F1	RN-EFG-B03	Fuse, 3A	

Illus. No. (Fig.5)	Stock No.	Description	Q'ty	Remark
MECHANICAL				
500	RN-MAD-1282	Chassis, main	1	
501	RN-MAD-1345	Chassis, top	1	
502	RN-MFP-1152	Escutcheon	1	○
506	RN-MCV-1732	Door	1	
507	RN-MSI-1002	Shaft, door	1	
508	RN-MSC-1159	Spring, door	1	
509	RN-MYD-1097	Knob, TONE	1	○
510	RN-MYC-1075	Knob, VOLUME, BAL	1	○
511	RN-MYB-2102	Button, EJECT	1	○
512	RN-MYB-1855	Button, FF	1	○
513	RN-MYB-1856	Button, REW	1	○
514	RN-MYB-2113	Button, PRO	1	○
515	RN-MYB-2114	Button, TAPE, LOUD	2	○
516	RN-MLC-1180	Douser	1	
517	RN-MIP-1402	Insulator	1	
518	RN-MHU-1064	Holder	1	
519	RN-MCE-120	Clamp	1	
520	RN-MST-1116	Spacer	1	
521	RN-MPC-1803	PC board(No parts mounted)	1	
522	RN-MLC-1179	Douser	1	
523	RN-MSB-1165	Sheild plate		

Illus. No. (Fig.5)	Stock No.	Description	Q'ty	Remark
ASSEMBLY MATERIAL				
530	F6-SBD-2.6×6S	Screw, 2.6×6mm	2	
531	F6-SNA-2.6×10S	Screw, 2.6×10mm	1	
532	F6-SSA-3×6S-M-ZN2A	Screw, 3×6mm	7	
533	F6-SBD-3×4S	Screw, 3×4mm	2	
534	F6-SBD-3×10S	Screw, 3×10mm	2	
535	RN-MET-1384	Special screw, 2.6×4mm	1	
INSTALLATION SCREWS				
	RN-MBW-C5×8S-M-ZN2A	Bolt with washer, 5×8mm	5	
	RN-MTN-A6×16	Tapping screw, 6×16mm	1	
	RN-MET-144	Bolt with washer, 6×20mm	3	
	F6-N1-6S	Nut, 6mm	3	
	F6-WM-6S	Washer, 6mm	3	

CASSETTE DECK (RN-MDK-67/1)

Illus.No. (Fig. 6)	Stock No.	Description	Q'ty	Remark
MECHANICAL				
1	RN-MAS-1063	Chassis	1	
2	RN-MYT-1260	Sub-chassis	1	
3	RN-MHE-1660	Holder	1	
4	RN-MHE-1661	Holder	1	
5	RN-MUL-1351	Lever	1	
6	RN-MUL-1352	Lever	1	
7	RN-MUL-1353	Lever	1	
8	RN-MYT-1261	Sub-chassis	1	
9	RN-MKR-1213	Pinchroller assembly	1	
10	RN-MKR-1214	Pinchroller assembly	1	
11	RN-MUL-1354	Lever	1	
12	RN-MUG-1178	Gear	1	
13	RN-MKS-1025	Slip mechanism	2	○
14	RN-MUG-1179	Gear	1	
15	RN-MUG-1180	Gear	1	
16	RN-MHE-1662	Holder	1	
17	RN-MUF-1020	Flywheel	2	
M1(18)	RN-EDM-1077	DC Motor	1	○
21	RN-MKI-1023	Loading mechanism	1	
22	RN-MYT-1262	Sub-chassis	1	
23	RN-MUL-1355	Lever	1	
24	RN-MUL-1356	Lever	1	
25	RN-MUC-1031	Cam	1	
26	RN-MUL-1357	Lever	1	
27	RN-MUL-1358	Lever	1	
28	RN-MHE-1663	Holder	1	
29	RN-MUG-1181	Gear	1	
30	RN-MUG-1182	Gear	1	
31	RN-MUC-1032	Cam	1	
32	RN-MUC-1033	Cam	1	
33	RN-MUL-1359	Lever	1	
34	RN-MUL-1360	Lever	1	
35	RN-MUC-1034	Cam	1	
36	RN-MUL-1361	Lever	1	
37	RN-MRP-1122	Roller	2	
38	RN-MUC-1035	Cam	2	
39	RN-MUG-1183	Gear	1	
40	RN-MRP-1123	Roller	1	
41	RN-MUG-1184	Gear	1	
42	RN-MUL-1362	Lever	1	
43	RN-MUG-1185	Gear	2	
44	RN-MRP-1124	Roller	1	
45	RN-MUL-1363	Lever	1	
46	RN-MSI-1102	Shaft	1	
47	RN-MRP-1125	Roller	1	

Illus.No. (Fig. 6)	Stock No.	Description	Q'ty	Remark
48	RN-MSS-1036	Spacer	1	
49	RN-MSS-1037	Spacer	1	
50	RN-MUB-1037	Belt	1	○
51	RN-MUB-1038	Belt	1	○
52	RN-MSW-1009	Spring	1	
53	RN-MSW-1010	Spring	1	
54	RN-MSW-1011	Spring	1	
55	RN-MSE-1528	Spacer	1	
56	RN-MUL-1364	Lever	1	
57	RN-MUL-1365	Lever	1	
58	RN-MUL-1367	Lever	1	
59	RN-MSW-1012	Spring	1	
60	RN-MSE-1529	Spacer	1	
61	RN-MSB-1161	Sheild plate	1	
62	RN-MPM-2969	PC board(No parts mounted)	1	
S3(63)	RN-ESS-22-196	Slide switch	1	○
S5(64)	RN-ESL-1040	Leaf switch	1	○
A1(65)	RN-EHM-C44-75	P.B. Head	1	○
S4(67)	RN-ESL-1041	Leaf switch	1	○
68	RN-MRP-1126	Roller	1	
74	RN-MSE-1520	Spacer	1	
76	RN-MSC-1401	Spring	1	
77	RN-MSC-1402	Spring	2	
78	RN-MSC-1403	Spring	1	
79	RN-MSC-1404	Spring	1	
80	RN-MSC-1405	Spring	2	
81	RN-MSC-1406	Spring	1	
82	RN-MSC-1407	Spring	1	
83	RN-MSC-1408	Spring	1	
84	RN-MSC-1409	Spring	1	
85	RN-MSC-1410	Spring	1	
86	RN-MSC-1411	Spring	1	
87	RN-MSC-1412	Spring	1	
88	RN-MSC-1413	Spring	1	
89	RN-MSC-1414	Spring	1	
90	RN-MSC-1415	Spring	1	
91	RN-MSC-1416	Spring	1	
ASSEMBLY MATERIAL				
94	RN-MET-1335	Special screw, 2.6×4mm	1	
95	RN-MET-1306	Special screw, 1.7×5.5mm	1	
96	RN-MET-1307	Special screw, 1.7×6mm	1	
97	RN-MET-1308	Special screw, 2×4mm	1	
98	RN-MET-1309	Special screw, 2.6×3mm	1	
99	RN-MET-1310	Special screw, 2 ×5mm	3	
100	RN-MET-1311	Special screw, 2.6 ×8mm	2	
101	RN-MET-1312	Special screw, 2.6 ×5mm	3	
102	F6-SBD-2×4S	Screw, 2×4mm	2	
103	F6-SBD-2×5S	Screw, 2×5mm	1	

Illus.No. (Fig. 6)	Stock No.	Description	Q'ty	Remark
104	RN-MET-1313	Special screw, 2 ×5mm	1	
106	RN-MET-1314	Special screw, 2.6×10mm	1	
109	RN-MWP-1103	Washer, 2.6φ	1	
110	RN-MWP-1104	Washer, 2.6φ	1	
111	RN-MWP-1105	Washer, 1.2φ	5	
112	RN-MWP-1097	Washer, 1.6φ	1	
113	RN-MWP-1099	Washer, 2.1φ	2	
114	RN-MWP-1106	Washer, 2.1φ	2	
115	RN-MWP-1107	Washer, 1.7φ	1	
116	RN-MWP-1108	Washer, 1.6φ	5	
119	F6-ER-1.5	E-type ring, 1.5mm	1	
120	F6-ER-2	E-type ring, 2mm	5	
121	F6-ER-2.5	E-type ring, 2.5mm	4	
122	RN-MHJ-1004	E-type ring, 1.6mm	2	

Note : Specifications subject to change without prior notice.