6F-16WA

USA Model
Canada Model

ISO
Set using ISO screws

SPECIFICATIONS

Circuit System: 10-transistor, 6-diode, FM/AM 2-band superheterodyne

Frequency Coverage:
FM : 87.5 – 108 MHz (3.42 – 2.78 m)
AM : 530 – 1,605 kHz (566 – 187 m)

Intermediate Frequency:
FM : 10.7 MHz
AM : 455 kHz

Antenna System:
FM : built-in telescopic antenna
AM : built-in ferrite bar antenna

Maximum Sensitivity:
FM : 4.5 μV (13 dB)
AM : 66 μV/m (35 dB/m)

Selectivity
at ± 10 kHz off-resonance : 25 dB at 1,000 kHz

Power Output
at 10 % distortion: 240 mW
at maximum output: 400 mW

Current Drain at No Signal:
FM : 18.5 mA
AM : 17 mA

Speaker: 2 1/2" (6.6 cm) dia PM dynamic, 8 Ω

Power Requirement: 4.5 V DC, 3 "C" size flashlight batteries.
House current can be used with SONY AC-33W ac adaptor

Dimensions: 7 1/16" (W) x 4 7/8" (H) x 2 1/4" (D)
180 mm (W) x 123 mm (H) x 57 mm (D)

Weight: 1 lb 9 oz (700 g)

SONY®
SERVICE MANUAL

TABLE OF CONTENTS

Title	Page
Specifications	1
Hardware Nomenclature	2
SECTION 1. OUTLINE	
1-1. Block Diagram	3
1-2. Internal View	3
SECTION 2. DISASSEMBLY	
2-1. Rear Cover Removal	4
2-2. Printed Circuit Board Removal	4
2-3. Dial Cord Stringing	4
SECTION 3. CIRCUIT ADJUSTMENTS	
3-1. FM I-f Alignment	5
3-2. AM I-f Alignment	5
3-3. Frequency Coverage and Tracking Adjustment	6
SECTION 4. SCHEMATIC AND MOUNTING DIAGRAMS	
4-1. Schematic Diagram	7
4-2. Mounting Diagram – Conductor Side –	9
SECTION 5. EXPLODED VIEW AND PACKING	
5-1. Exploded View	11
5-2. Packing	13
SECTION 6. ELECTRICAL PARTS LIST	14

—— Hardware Nomenclature ——

P – Pan Head Screw

PS – Pan Head Screw with Spring Washer

K – Flat Countersunk Head Screw

B – Binding Head Screw

RK – Oval Countersunk Head Screw

T – Truss Head Screw

R – Round Head Screw

F – Flat Fillister Head Screw

SC – Set Screw

E – Retaining Ring (E Washer)

W – Washer
SW – Spring Washer
LW – Lock Washer
N – Nut

– Example –

⊕ P 3×10

- Type of Slot
- Length in mm (L)
- Diameter in mm (D)
- Type of Head

SECTION 1
OUTLINE

1-1. BLOCK DIAGRAM

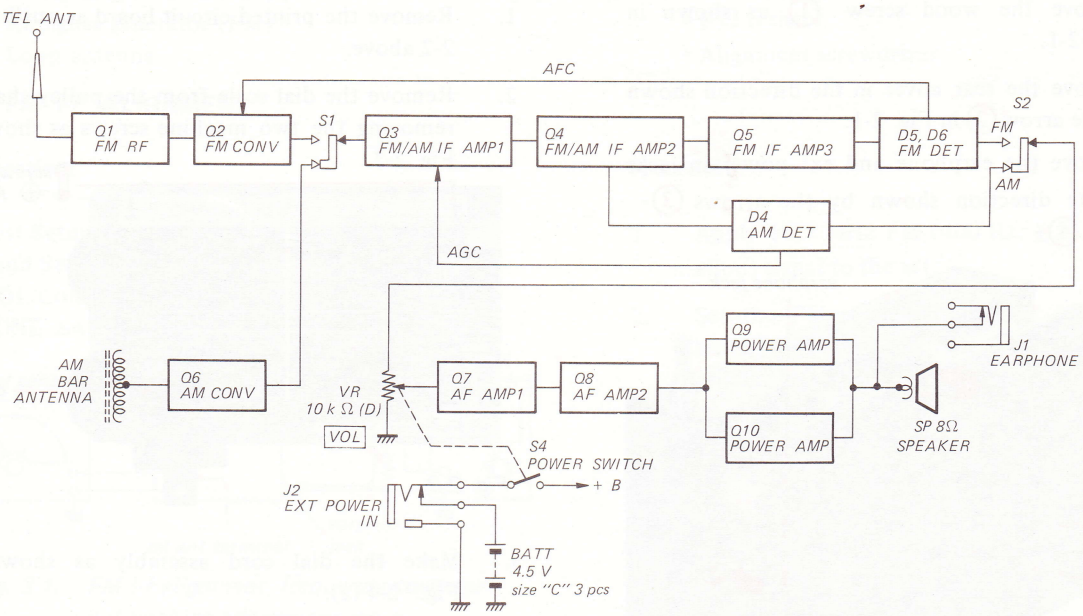

Fig. 1-1.

1-2. INTERNAL VIEW

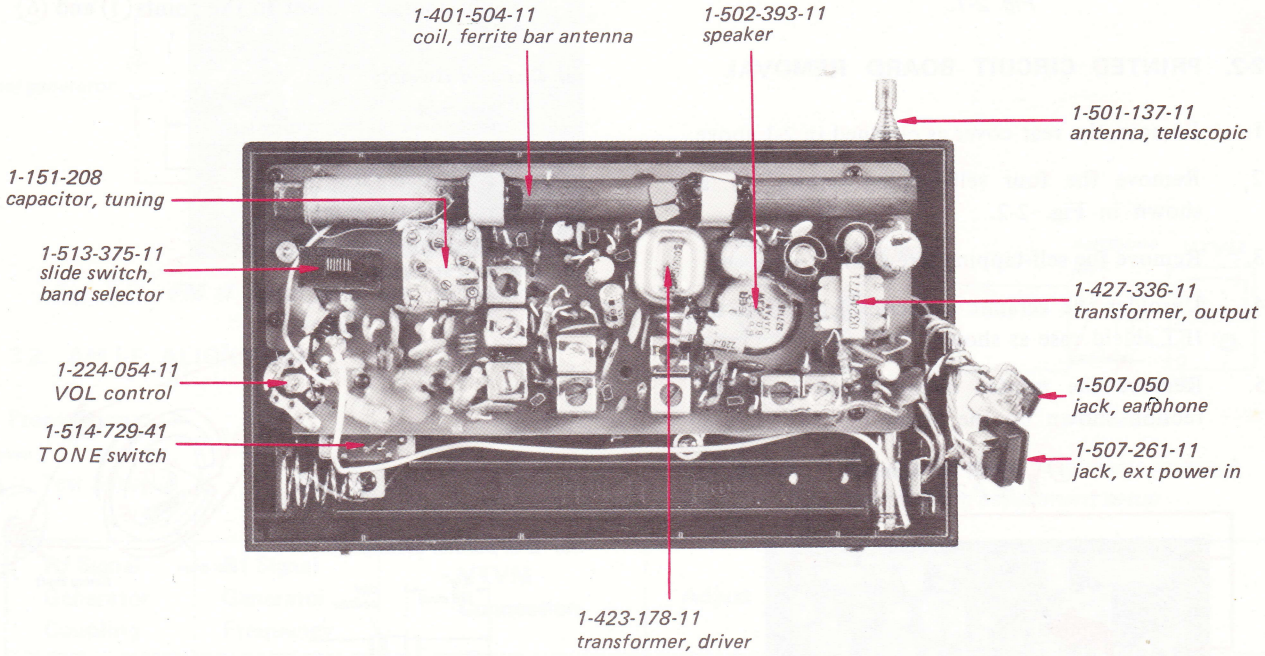

Fig. 1-2. Internal view, with rear cover removed

SECTION 2
DISASSEMBLY

2-1. REAR COVER REMOVAL

1. Remove the wood screw ① as shown in Fig. 2-1.
2. Remove the rear cover in the direction shown by the arrow ② in Fig. 2-1.
3. Remove the earphone and ext power in jacks in the direction shown by the arrows ③ and ④

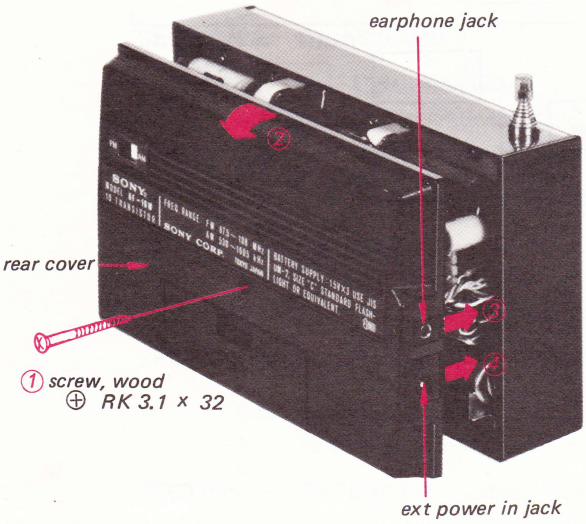

Fig. 2-1.

2-2. PRINTED CIRCUIT BOARD REMOVAL

1 Remove the rear cover as outlined in 2-1 above.

2 Remove the four self-tapping screws ① as shown in Fig. 2-2.

3. Remove the self-tapping screw ②
4. Unsolder the ceramic capacitor leg ③ at the IFT shield case as shown.
5. Remove the printed circuit board in the direction shown by the arrow ④

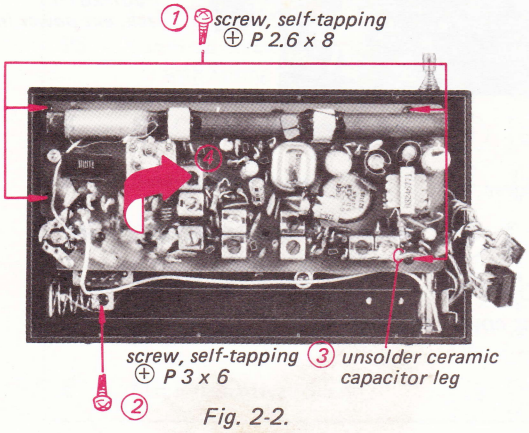

Fig. 2-2.

2-3. DIAL CORD STRINGING

1. Remove the printed circuit board as outlined in 2-2 above.
2. Remove the dial scale from the pulley shaft by removing the two machine screws as shown in Fig. 2-3.

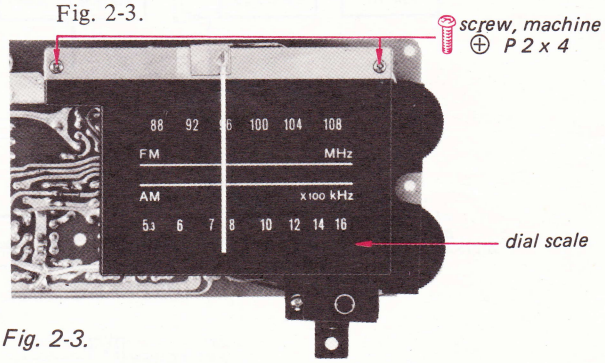

Fig. 2-3.

3. Make the dial cord assembly as shown in Fig. 2-4 (a).
4. Set the dial drum at fully counterclockwise position and string the dial cord in the numerical order as shown in Fig. 2-4 (b).
5. Set the dial pointer on the dial cord and fix the dial pointer at the position as illustrated and apply contact cement to the points ① and ⑥

(a) Dial cord assembly

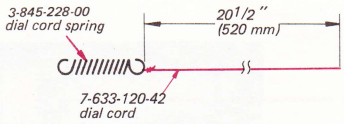

(b) Dial cord stringing

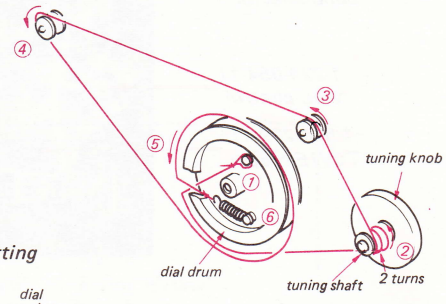

(c) Dial pointer setting

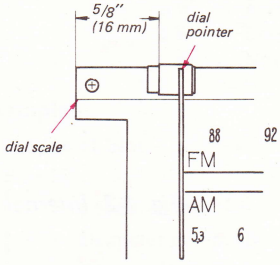

Fig. 2-4. Dial cord stringing

SECTION 3
CIRCUIT ADJUSTMENTS

Test Equipment/Tools Required:

* Rf signal generator (AM)
* Rf signal generator (FM)
* Loop antenna
* VTVM
* 8 Ω resistor
* Alignment screwdriver

3-1. FM I-F ALIGNMENT

Preparation:

Test Setup	:	See Fig. 3-1.
Band Selector	:	FM
VOL Control	:	Maximun
TONE Switch	:	H

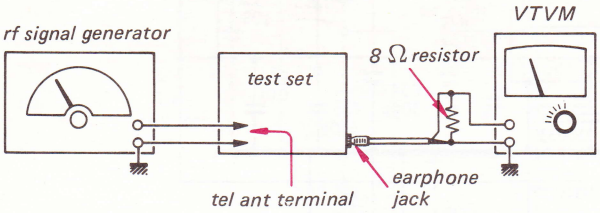

Fig. 3-1. FM I-f alignment, frequency coverage and tracking adjustment setup

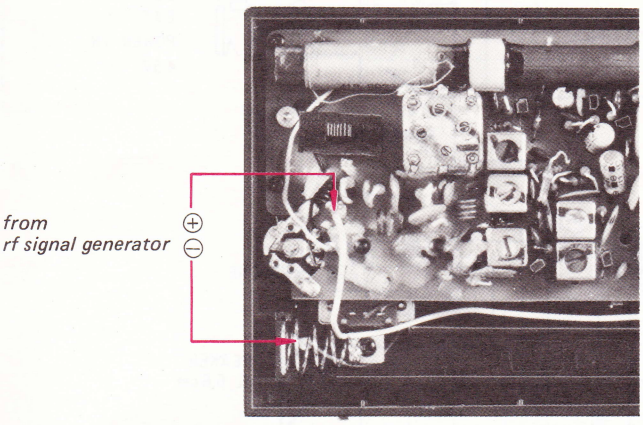

Fig. 3-2. FM rf signal generator connection

Procedure:

1. Apply 10.7 MHz FM (400 Hz, ± 22.5 kHz deviation) signal to the set.
2. Set the FM rf signal generator to AM modulation mode and turn the core of FM i-f discriminator transformer IFT F5 (see Fig. 3-4) to obtain the minimum voltage reading on the VTVM.
3. Set the FM rf signal generator back to FM modulation mode and turn the cores of FM IFT's IFT F1 through IFT F4 to obtain the maximum voltage reading on the VTVM.
4. Repeat the above adjustment two or three times to obtain the best condition.

3-2. AM I-F ALIGNMENT

Preparation:

Test Setup	:	See Fig. 3-3.

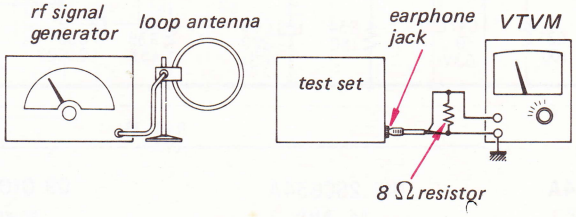

Fig. 3-3. AM i-f alignment, frequency coverage and tracking adjustment setup

Rf Signal Generator Coupling	Rf Signal Generator Frequency	VTVM Connection	Adjust	Remarks
Loop antenna (See Fig. 3-3)	455 kHz modulation: 1 kHz, 30%	Earphone jack with 8Ω load resistor in parallel.	Cores of IFT A1 IFT A2 IFT A3 See Fig. 3-4.	Band Selector: AM VOL Control: Maximum volume TUNE Knob: Fully downward position TONE Switch: H Adjust for maximum meter reading.

3-3. FREQUENCY COVERAGE AND TRACKING ADJUSTMENT

Adjustment	Rf Signal Generator Coupling	Rf Signal Generator Frequency	Receiver Tuning Knob Setting	Adjust	Remarks
FM Frequency Coverage	Direct connection to TEL ANT terminals See Fig. 3-2.	67.5 MHz	Fully upward	Pitch of FM osc coil L4	Test Setup: Fig. 3-1. Band Selector: FM VOL Control: Maximum TONE Switch: H FM Rf Signal Generator Modulation: 400 Hz, ± 22.5 kHz deviation Adjust for maximum meter reading.
		109.5 MHz	Fully downward	FM osc trimmer CT2	
FM Tracking		67.5 MHz	Tune in 87.5 MHz signal	Pitch of FM rf coil L2	
		109.5 MHz	Tune in 109.5 MHz signal	FM rf trimmer CT1	
AM Frequency Coverage	Loop antenna See Fig. 3-3.	520 kHz	Fully upward	Core of AM osc coil L6	Test Setup: Fig. 3-3. Band Selector: AM VOL Control: Maximum TONE Switch: H AM Rf Signal Generator Modulation: 1 kHz, 30% Adjust for maximum meter reading.
		1,680 kHz	Fully downward	AM osc trimmer CT4	
AM Tracking		620 kHz	Tune in 620 kHz signal	Position of AM and coil L5	
		1,400 kHz	Tune in 1,400 kHz signal	AM ant trimmer CT3	

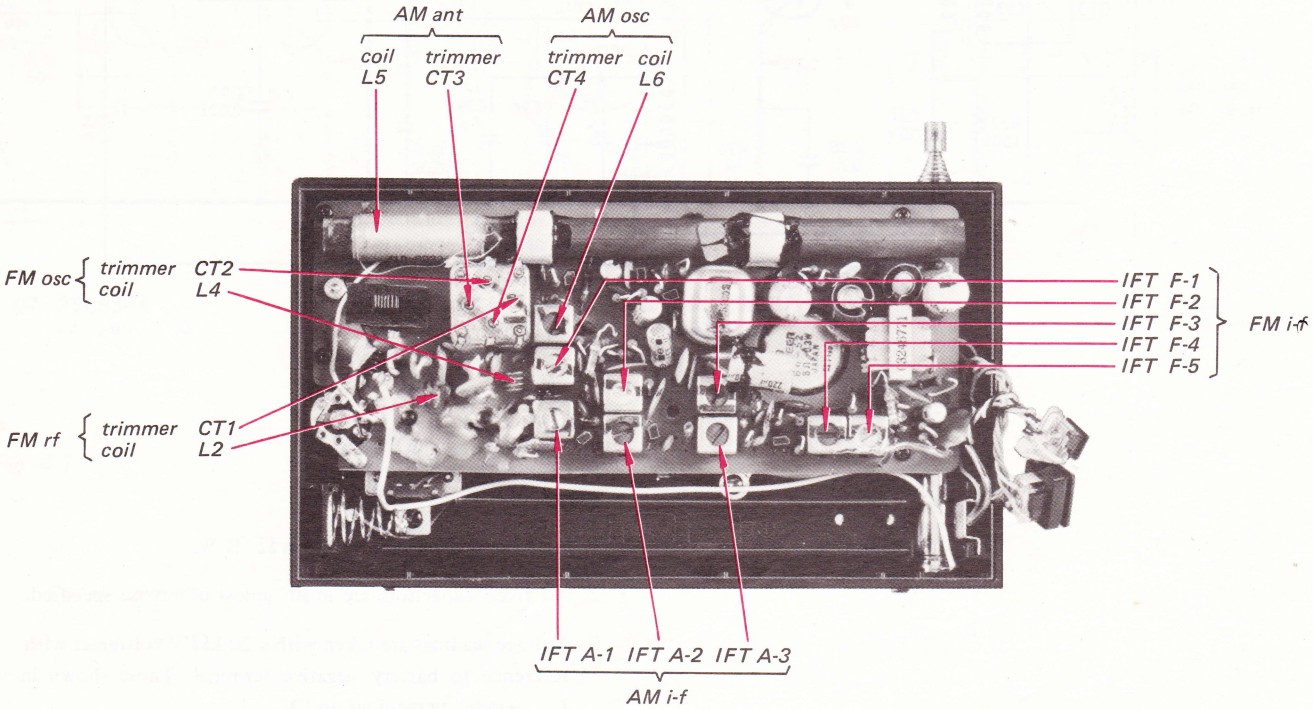

Fig. 3-4. Adjustment locations

SECTION 4
SCHEMATIC AND MOUNTING DIAGRAMS

4-1. SCHEMATIC DIAGRAM

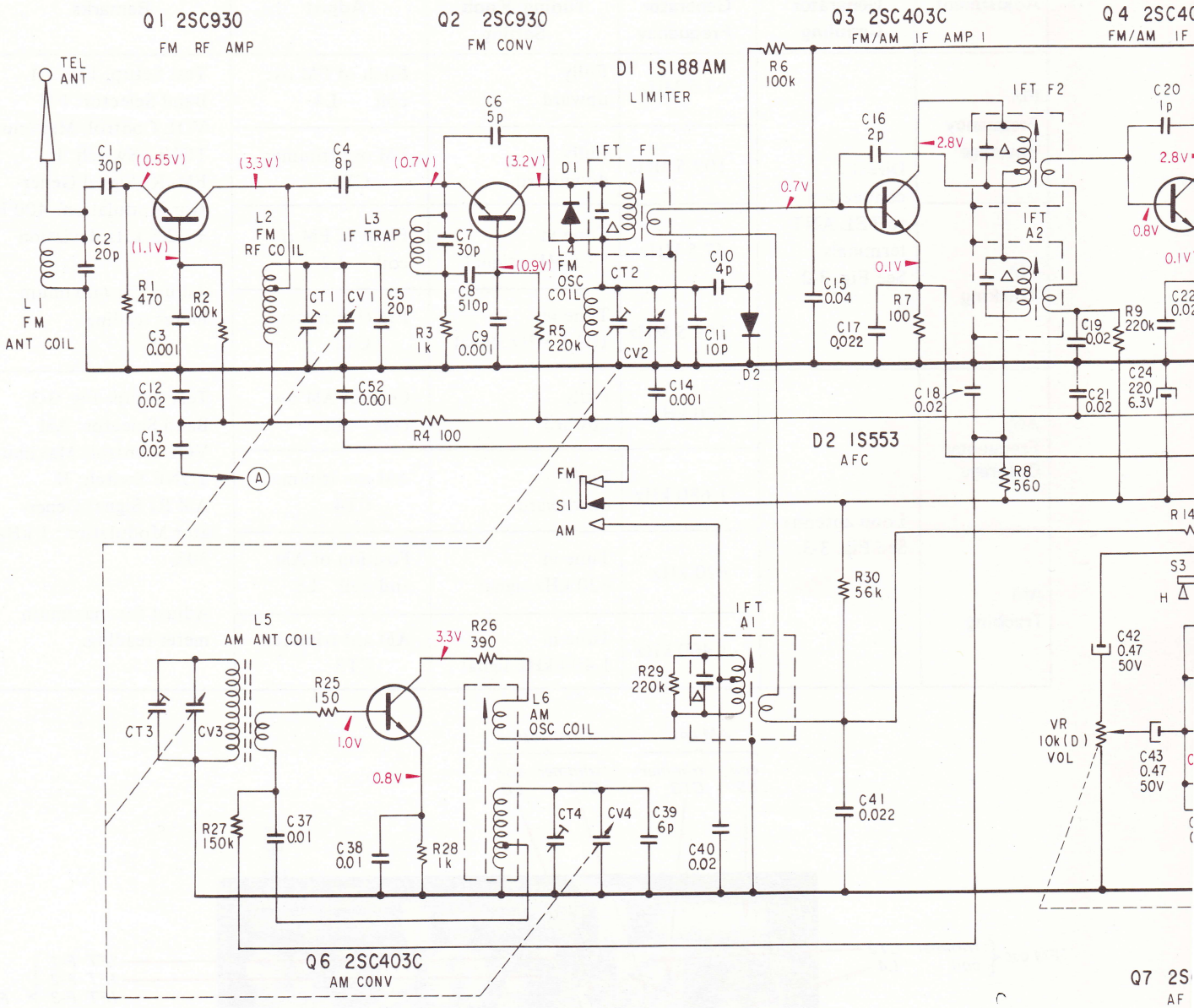

Fig. 4-1.

Note:

1. All fixed resistors are ± 5 %, in Ω, ¼ W.
2. All fixed capacitors are in μF unless otherwise specified.
3. Voltage readings are taken with a 20 kΩ/V voltmeter with reference to battery negative terminal. Those shown in ( ) indicate readings on FM.
4. Capacitors marked with △ are built in i-f transformers.

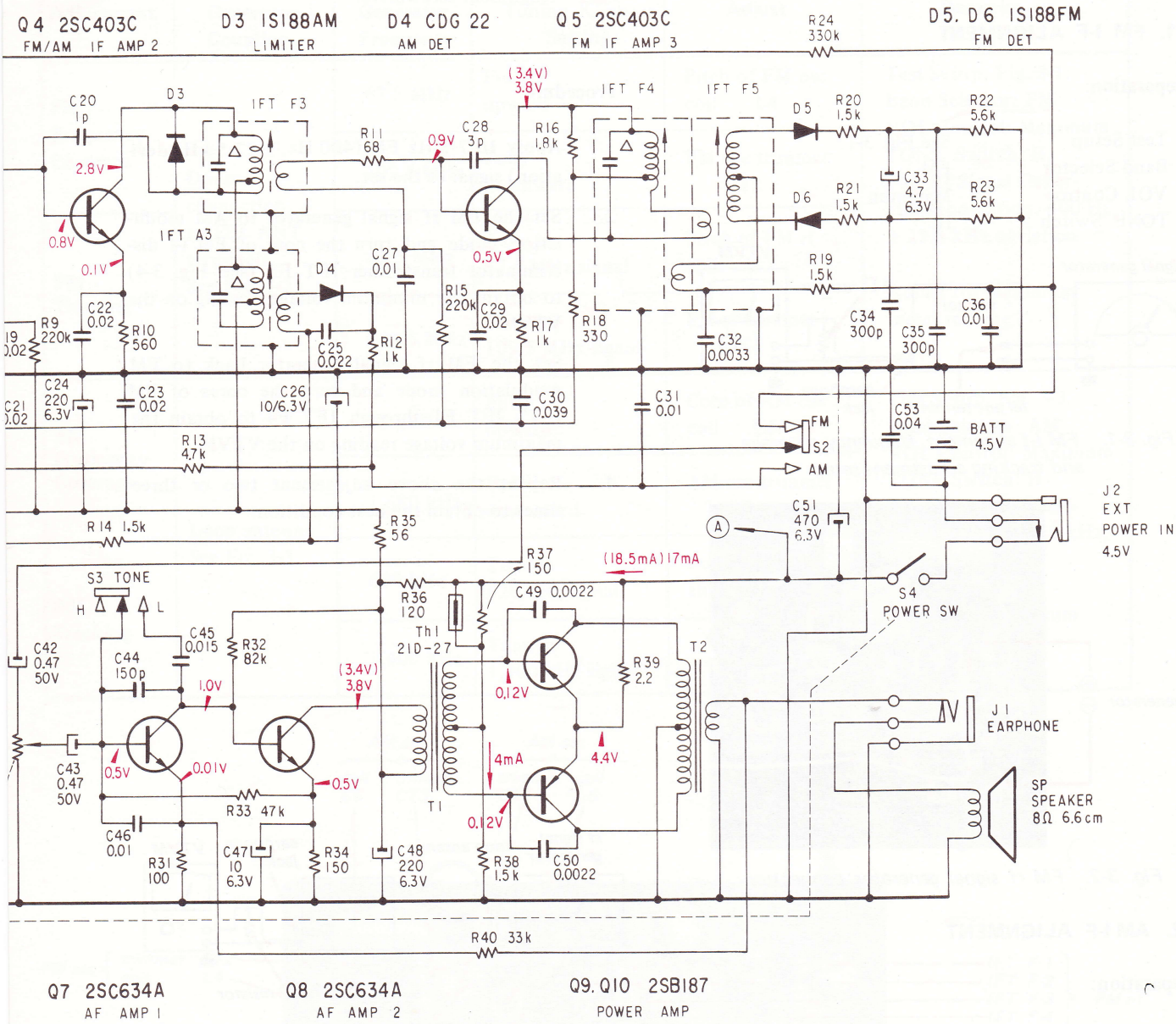
Q4 2SC403C
FM/AM IF AMP 2
D3 1S188AM
LIMITER
D4 CDG 22
AM DET
Q5 2SC403C
FM IF AMP 3
R24 330k
D5. D6 1S188FM
FM DET
C20 1p
D3
IFT F3
R11 68
0.9V
C28 3p
(3.4V) 3.8V
R16 1.8k
IFT F4
IFT F5
D5
R20 1.5k
R22 5.6k
C33 4.7 6.3V
D6
R21 1.5k
R23 5.6k
2.8V
0.8V
0.1V
IFT A3
C27 0.01
0.5V
R19 1.5k
D4
R15 220k
C29 0.02
R17 1k
R18 330
C34 300p
C35 300p
C36 0.01
R9 220k
R10 560
C22 0.02
C25 0.022
R12 1k
C32 0.0033
C24 220 6.3V
C23 0.02
C26 10/6.3V
C30 0.039
C31 0.01
C53 0.04
BATT 4.5V
FM
S2
AM
R13 4.7k
R14 1.5k
R35 56
C51 470 6.3V
J2 EXT POWER IN 4.5V
R37 150
(18.5mA) 17mA
S3 TONE
H
L
R36 120
C49 0.0022
S4 POWER SW
C42 0.47 50V
C45 0.015
R32 82k
Th1 21D-27
T2
C44 150p
1.0V
(3.4V) 3.8V
0.12V
R39 2.2
J1 EARPHONE
C43 0.47 50V
0.5V
0.01V
0.5V
4mA
4.4V
T1
SP SPEAKER 8Ω 6.6cm
R33 47k
C46 0.01
0.12V
R31 100
C47 10 6.3V
R34 150
C48 220 6.3V
R38 1.5k
C50 0.0022
R40 33k
Q7 2SC634A
AF AMP 1
Q8 2SC634A
AF AMP 2
Q9. Q10 2SB187
POWER AMP

Fig. 4-1.

4-2. MOUNTING DIAGRAM

– Conductor Side –

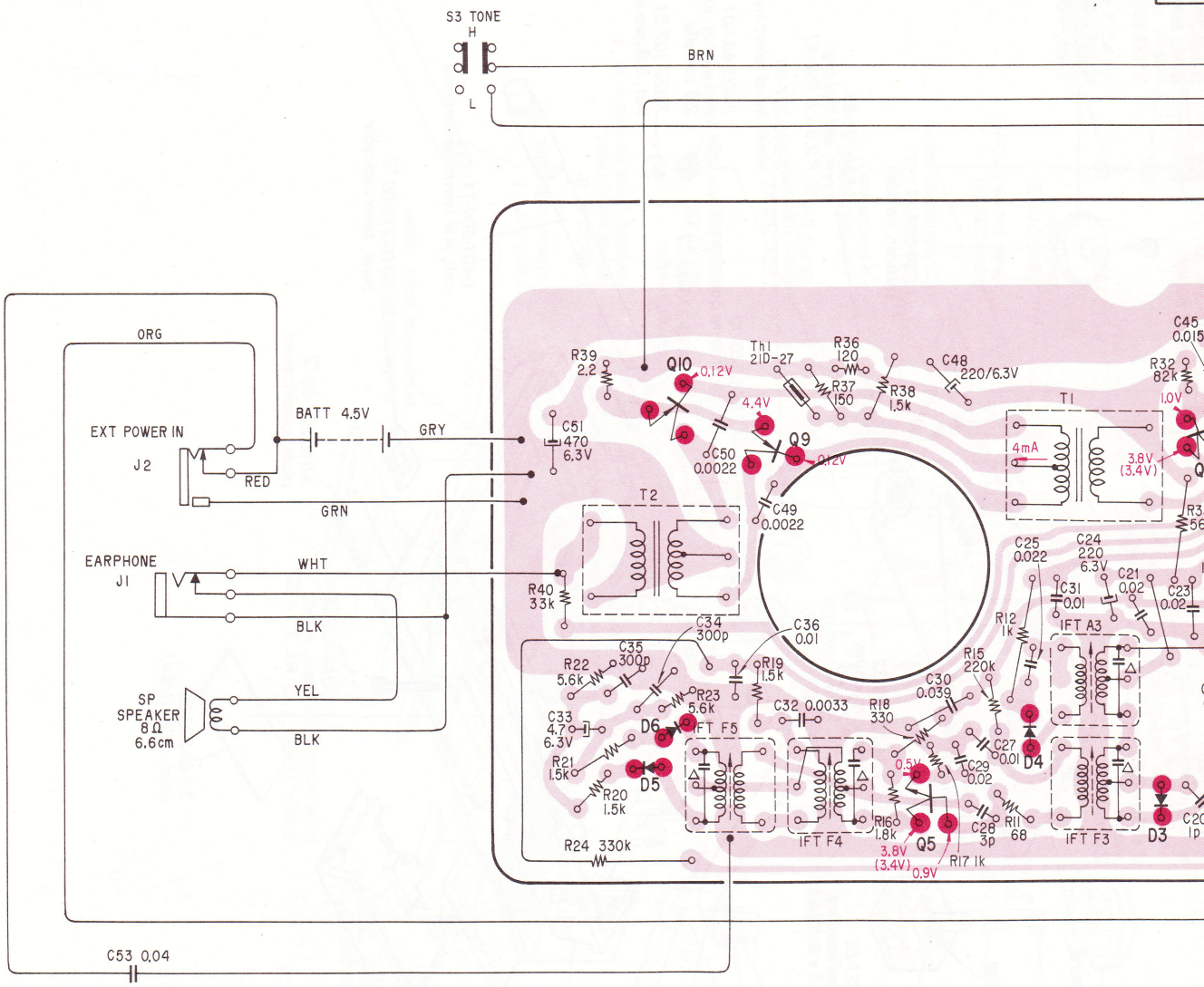

Fig. 4

Q1, Q2 : 2SC930

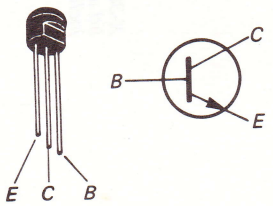

Q3 thru Q6 : 2SC403C
Q7, Q8 : 2SC634A

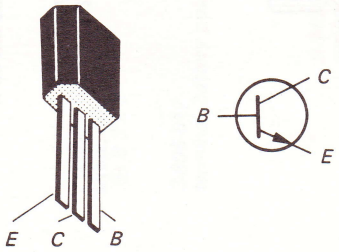

Q9, Q10

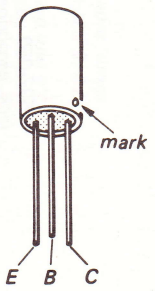

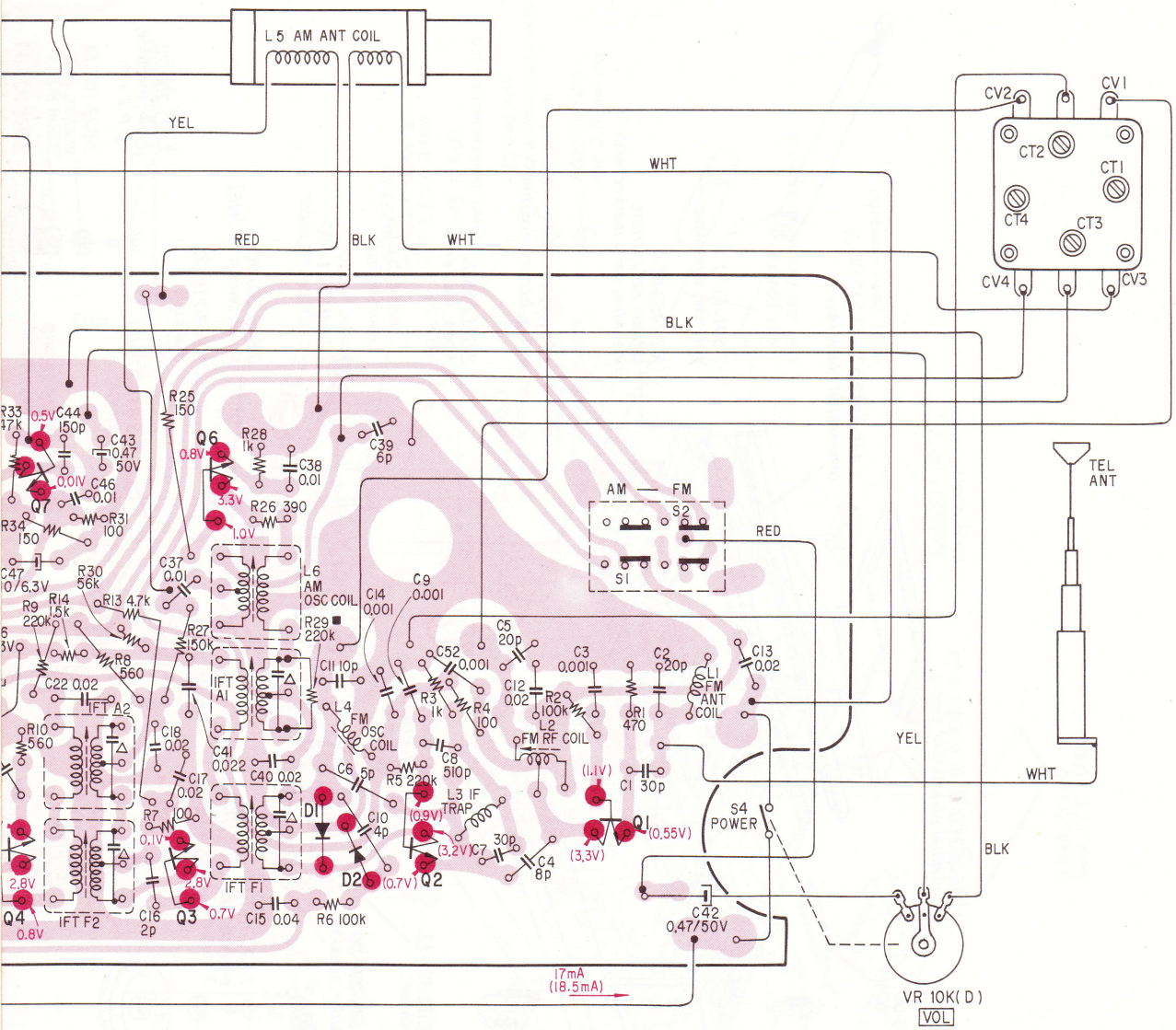

B187

D1, D3 : 1S188AM
D5, D6 : 1S188FM

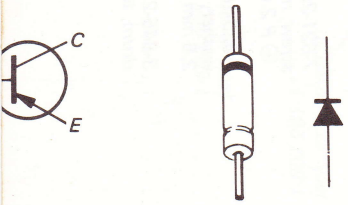

D2 : 1S553

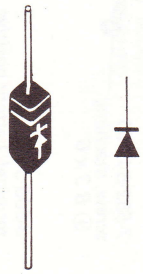

D4 : CDG-22

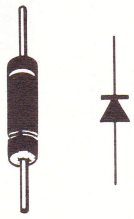

SECTION 5
EXPLODED VIEW AND PACKING

5-1. EXPLODED VIEW

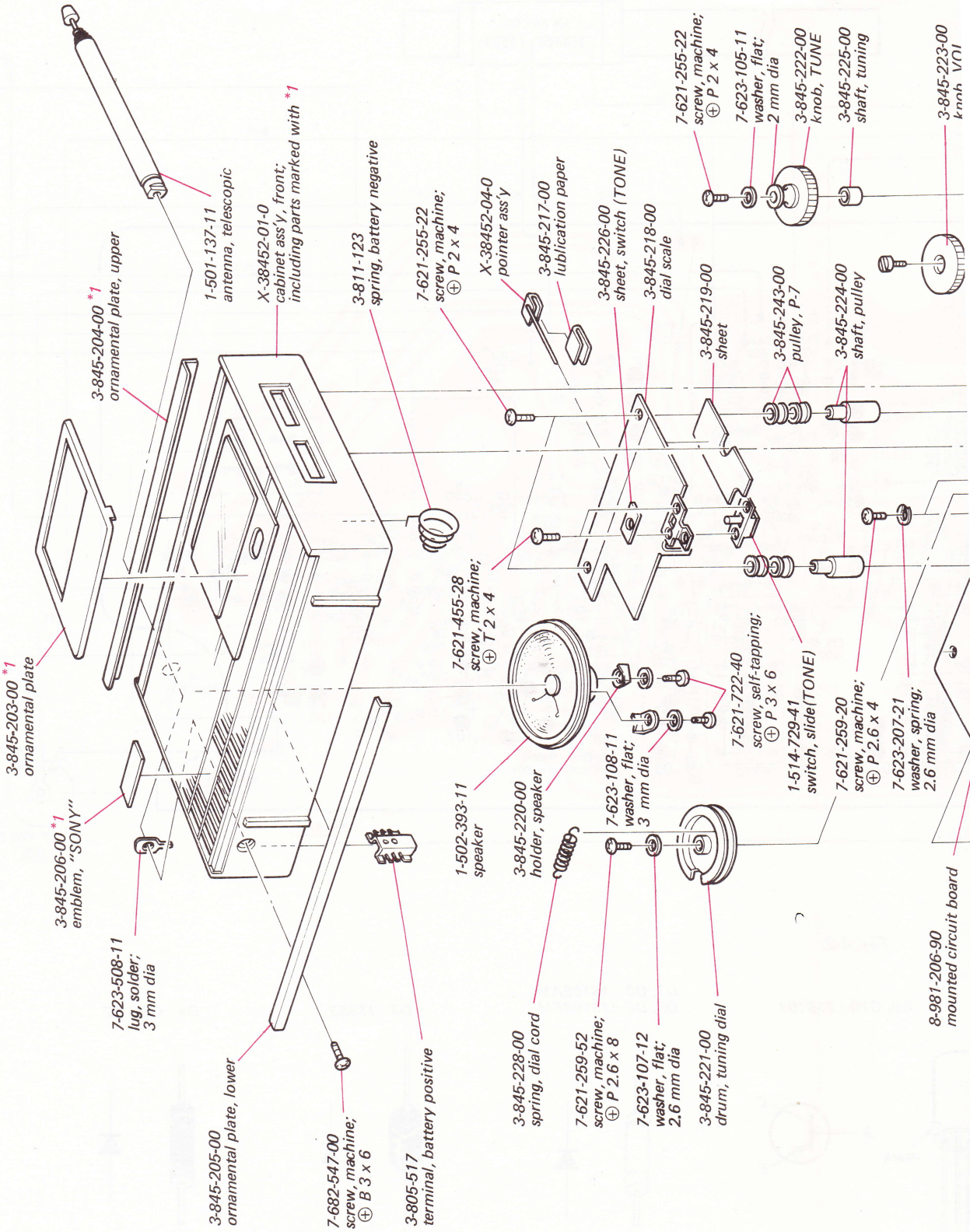

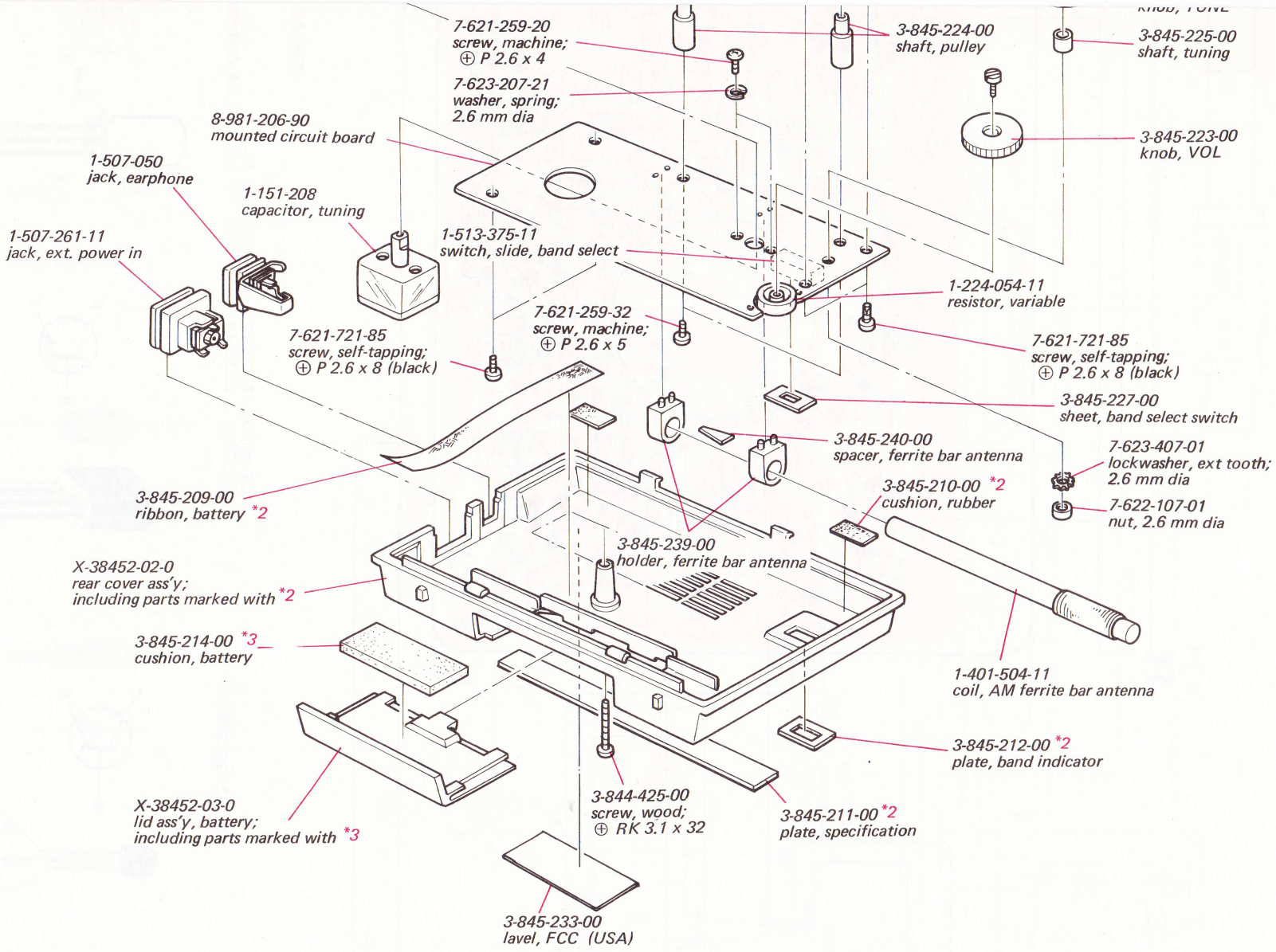
7-621-259-20
screw, machine;
⊕ P 2.6 x 4
7-623-207-21
washer, spring;
2.6 mm dia
3-845-224-00
shaft, pulley
3-845-225-00
shaft, tuning
3-845-223-00
knob, VOL
8-981-206-90
mounted circuit board
1-507-050
jack, earphone
1-151-208
capacitor, tuning
1-507-261-11
jack, ext. power in
1-513-375-11
switch, slide, band select
1-224-054-11
resistor, variable
7-621-259-32
screw, machine;
⊕ P 2.6 x 5
7-621-721-85
screw, self-tapping;
⊕ P 2.6 x 8 (black)
7-621-721-85
screw, self-tapping;
⊕ P 2.6 x 8 (black)
3-845-227-00
sheet, band select switch
3-845-240-00
spacer, ferrite bar antenna
7-623-407-01
lockwasher, ext tooth;
2.6 mm dia
3-845-210-00 *2
cushion, rubber
7-622-107-01
nut, 2.6 mm dia
3-845-209-00
ribbon, battery *2
3-845-239-00
holder, ferrite bar antenna
X-38452-02-0
rear cover ass'y;
including parts marked with *2
3-845-214-00 *3
cushion, battery
1-401-504-11
coil, AM ferrite bar antenna
3-845-212-00 *2
plate, band indicator
X-38452-03-0
lid ass'y, battery;
including parts marked with *3
3-844-425-00
screw, wood;
⊕ RK 3.1 x 32
3-845-211-00 *2
plate, specification
3-845-233-00
lavel, FCC (USA)

Fig. 5-1.

5-2. PACKING

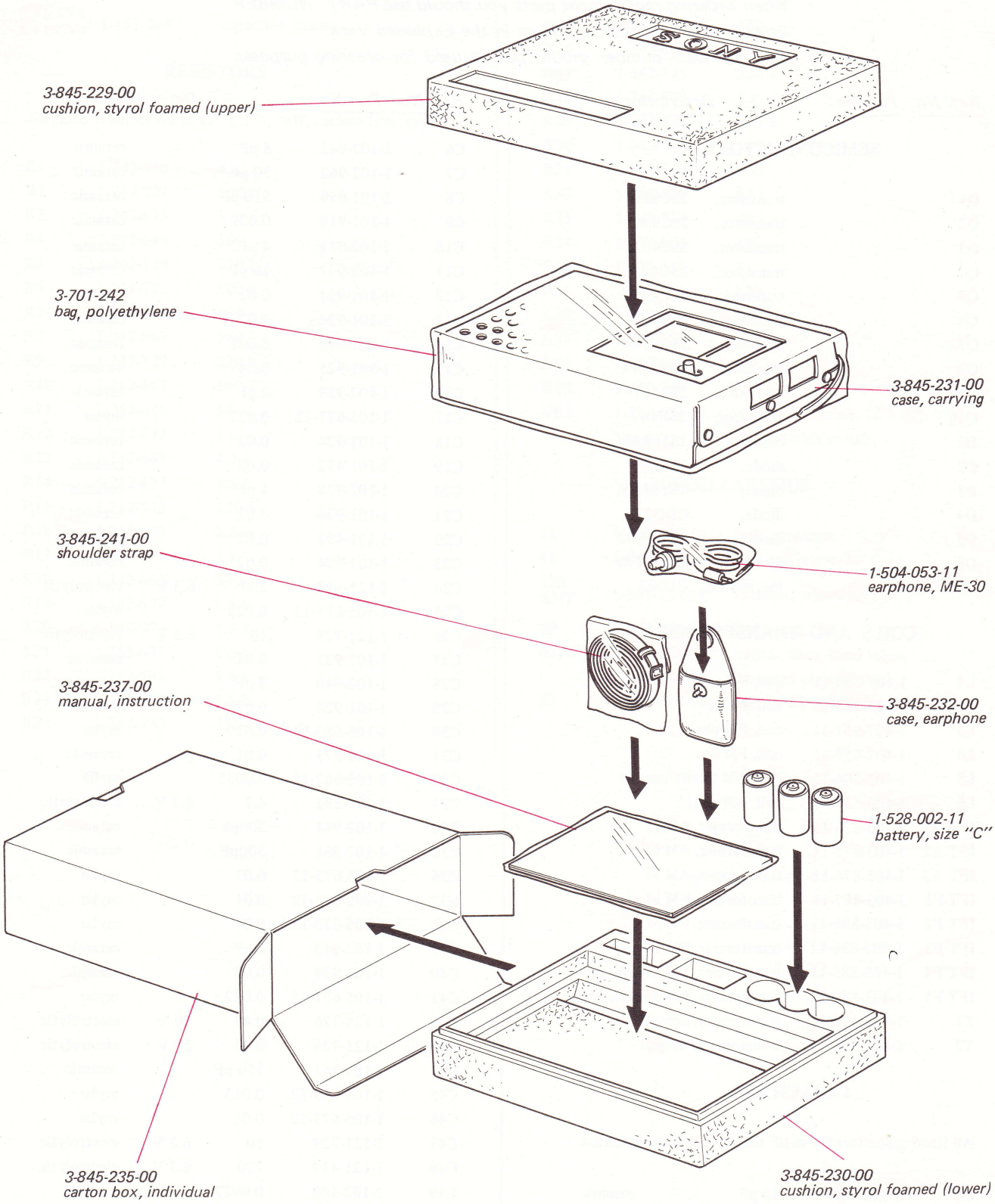

Fig. 5-2.

SECTION 6
ELECTRICAL PARTS LIST

When ordering replacement parts you should use PART NUMBER listed on the Parts List or shown in the Exploded View. The reference number should not be used for ordering purposes.

SEMICONDUCTORS

Ref. No.	Part No.	Description	
Q1		transistor,	2SC930
Q2		transistor,	2SC930
Q3		transistor,	2SC403C
Q4		transistor,	2SC403C
Q5		transistor,	2SC403C
Q6		transistor,	2SC403C
Q7		transistor,	2SC634A
Q8		transistor,	2SC634A
Q9		transistor,	2SB187
Q10		transistor,	2SB187
D1		diode,	1S188AM
D2		diode,	1S553
D3		diode,	1S188AM
D4		diode,	CDG22
D5		diode,	1S188FM
D6		diode,	1S188FM
Th1		thermistor,	21D27

COILS AND TRANSFORMERS

Ref. No.	Part No.	Description
L1	1-405-530-11	coil, FM ant
L2	1-425-743-11	coil, FM rf
L3	1-407-657-11	coil, FM choke
L4	1-407-659-11	coil, FM osc
L5	1-401-504-11	coil, AM ferrite bar ant
L6	1-405-537-11	coil, AM osc
IFT A1	1-403-876-11	transformer, AM i-f
IFT A2	1-403-875-11	transformer, AM i-f
IFT A3	1-403-874-11	transformer, AM i-f
IFT F1	1-403-887-11	transformer, FM i-f
IFT F2	1-403-886-11	transformer, FM i-f
IFT F3	1-403-886-11	transformer, FM i-f
IFT F4	1-403-885-11	transformer, FM discriminator
IFT F5	1-403-884-11	transformer, FM discriminator
T1	1-423-178-11	transformer, driver
T2	1-427-336-11	transformer, output

CAPACITORS

All fixed capacitors are in μF unless otherwise specified.

Ref. No.	Part No.	Description		
C1	1-102-962	30 pF		ceramic
C2	1-102-958	20 pF		ceramic
C3	1-101-918	0.001		ceramic
C4	1-102-945	8 pF		ceramic
C5	1-102-958	20 pF		ceramic
C6	1-102-942	5 pF		ceramic
C7	1-102-962	30 pF		ceramic
C8	1-101-059	510 pF		ceramic
C9	1-101-918	0.001		ceramic
C10	1-102-941	4 pF		ceramic
C11	1-102-947	10 pF		ceramic
C12	1-101-924	0.02		ceramic
C13	1-101-924	0.02		ceramic
C14	1-101-918	0.001		ceramic
C15	1-101-925	0.04		ceramic
C16	1-102-939	2 pF		ceramic
C17	1-105-677-12	0.022		mylar
C18	1-101-924	0.02		ceramic
C19	1-101-492	0.02		ceramic
C20	1-102-938	1 pF		ceramic
C21	1-101-924	0.02		ceramic
C22	1-101-492	0.02		ceramic
C23	1-101-924	0.02		ceramic
C24	1-121-419	220	6.3 V	electrolytic
C25	1-105-677-12	0.022		mylar
C26	1-121-729	10	6.3 V	electrolytic
C27	1-101-923	0.01		ceramic
C28	1-102-940	3 pF		ceramic
C29	1-101-924	0.02		ceramic
C30	1-105-680-12	0.039		mylar
C31	1-101-923	0.01		ceramic
C32	1-105-667-12	0.0033		mylar
C33	1-121-394	4.7	6.3 V	electrolytic
C34	1-102-981	300pF		ceramic
C35	1-102-981	300pF		ceramic
C36	1-105-673-12	0.01		mylar
C37	1-105-673-12	0.01		mylar
C38	1-105-673-12	0.01		mylar
C39	1-102-943	6 pF		ceramic
C40	1-101-924	0.02		ceramic
C41	1-105-677-12	0.022		mylar
C42	1-121-726	0.47	50 V	electrolytic
C43	1-121-726	0.47	50 V	electrolytic
C44	1-101-361	150 pF		ceramic
C45	1-105-675-12	0.015		mylar
C46	1-105-673-12	0.01		mylar
C47	1-121-729	10	6.3 V	electrolytic
C48	1-121-419	220	6.3 V	electrolytic
C49	1-102-100	0.0022		ceramic
C50	1-102-100	0.0022		ceramic
C51	1-121-424	470	6.3 V	electrolytic
C52	1-101-918	0.001		ceramic
C53	1-101-925	0.04		ceramic

Ref. No.	Part No.	Descrption
CT1-CT4, CV1-CV4	1-151-208	capacitor, tuning

RESISTORS

All fixed resistors are in Ω, ± 5 %, ¼W, carbon film type.

Ref. No.	Part No.	Description
R1	1-242-665	470
R2	1-242-721	100 k
R3	1-242-673	1 k
R4	1-242-649	100
R5	1-242-729	220 k
R6	1-242-721	100 k
R7	1-242-649	100
R8	1-242-667	560
R9	1-242-729	220 k
R10	1-242-667	560
R11	1-242-645	68
R12	1-242-673	1 k
R13	1-242-689	4.7 k
R14	1-242-677	1.5 k
R15	1-242-729	220 k
R16	1-242-679	1.8 k
R17	1-242-673	1 k
R18	1-242-661	330
R19	1-242-677	1.5 k
R20	1-242-677	1.5 k
R21	1-242-677	1.5 k
R22	1-242-691	5.6 k
R23	1-242-691	5.6 k
R24	1-242-733	330 k
R25	1-242-653	150
R26	1-242-663	390
R27	1-242-725	150 k
R28	1-242-673	1 k
R29	1-242-729	220 k
R30	1-242-715	56 k
R31	1-242-649	100
R32	1-242-719	82 k
R33	1-242-713	47 k
R34	1-242-653	150
R35	1-242-643	56
R36	1-242-651	120
R37	1-242-653	150
R38	1-242-677	1.5 k
R39	1-242-609	2.2
R40	1-242-709	33 k
VR1	1-224-054-11	resistor, variable, 10 k (D), VOL control with switch

MISCELLANEOUS

J1	1-507-050	jack, earphone
J2	1-507-261-11	jack, ext power in
TEL ANT	1-501-137-11	antenna, telescopic
SP	1-502-393-11	speaker, 8 Ω
S1, S2	1-513-375-11	switch, slide, band select
	8-981-206-90	mounted circuit board
S3	1-514-729-41	switch, slide, TONE

SONY CORPORATION

2E0530-1

© 1972

Printed in Japan

SONY®
SERVICE MANUAL

6F-16WA

USA Model
Canada Model

CORRECTION

No. 1
JUNE, 1972

indicates corrected portions.

1. FREQUENCY COVERAGE AND TRACKING ADJUSTMENT: Page 6

Adjustment	Rf Signal Generator Coupling	Rf Signal Generator Frequency	Receiver Tuning Knob Setting	Adjust	Remarks
FM Frequency Coverage	Direct connection to TEL ANT terminals See Fig. 3-2.	87.5 MHz	Fully upward	Pitch of FM osc coil L4	Test Setup: Fig. 3-1. Band Selector: FM VOL Control: Maximum TONE Switch: H FM Rf Signal Generator Modulation: 400 Hz, ± 22.5 kHz deviation
		109.5 MHz	Fully downward	FM osc trimmer CT2	
FM Tracking		87.5 MHz	Tune in 87.5 MHz signal	Pitch of FM rf coil L2	
		109.5 MHz	Tune in 109.5 MHz	FM rf trimmer CT1	Adjust for maximum meter reading.

2. ADJUSTMENT LOCATIONS: Page 6

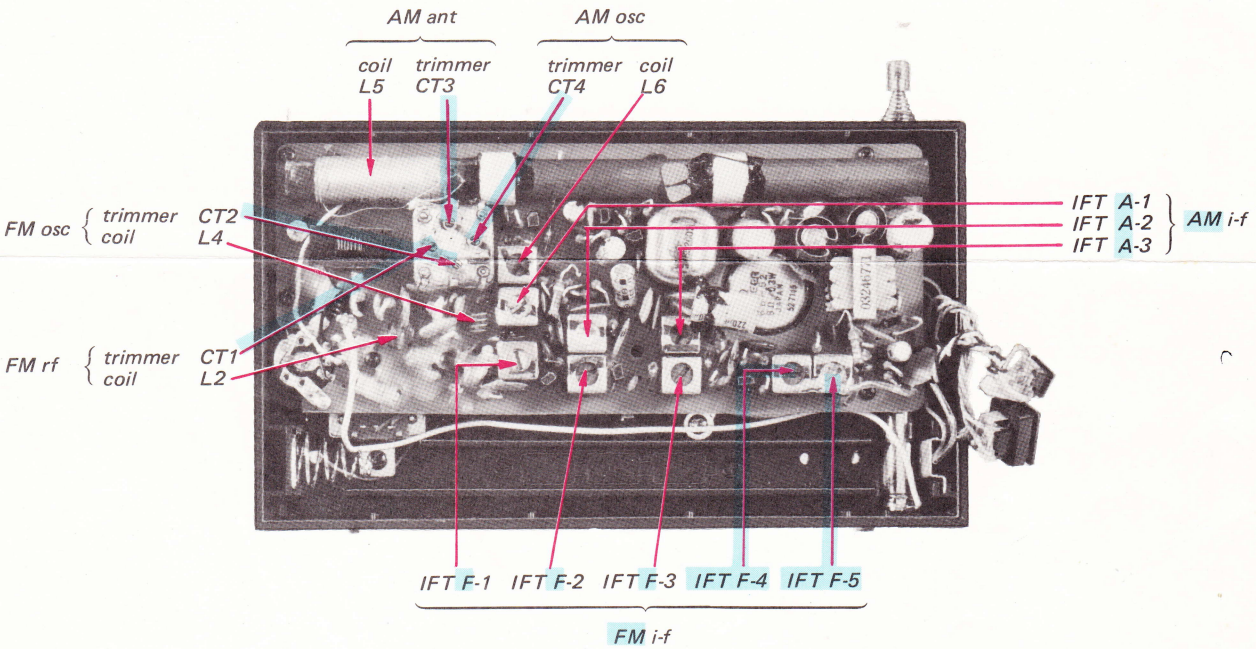

Fig. 3-4. Adjustment locations

SONY CORPORATION

© 1972

2G0530-1

Printed in Japan