SERVICE MANUAL
SILVER

MODEL XF900

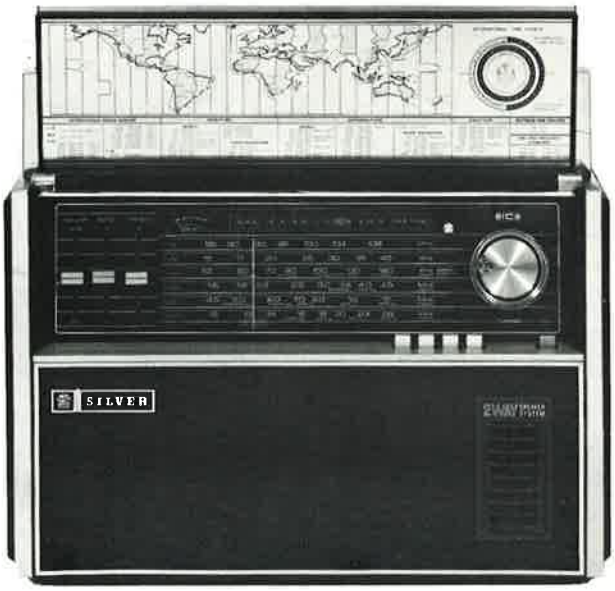

SPECIFICATIONS

FREQUENCY RANGE

FM···· 88 ~ 108 MHz
LW···· 150 ~ 400 KHz
MW ··· 520 ~ 1605 KHz
SW1··· 1.6 ~ 4.5 MHz
SW2··· 4.5 ~ 12 MHz
SW3··· 12 ~ 26.1 MHz

INTERMEDIATE FREQUENCY

FM ····· 10.7 MHz
LW, MW, SW1, SW2, SW3··· 455 KHz

AUDIO OUTPUT

Maximum ·····1,500 mW
Undistorted·····1,200 mW

SPEAKER

5" X 7" (12.7 X 17.8 cm) 6 ohms, and 2" (5.1 cm) 4 ohms PM dynamic speakers

POWER SUPPLY

AC110 ~ 130, 220 ~ 240 volts 50/60 Hz or 6 each 1½ volts flashlight batteries "D" cell (UM-1 X 6)

DIMENSION

15" (W) X 9⅞" (H) X 5½" (D)
380mm (W) X 250mm (H) X 140mm (D)

WEIGHT

15.6 l.b.s. (7.06 kg) (with Batteries)

TRANSISTOR COMPLEMENT

FM/AM IF & AUDIO SECTION

Q1, 2, 3	2SC460(C)	1st, 2nd, 3rd FM IF Amp. (NPN)
Q4, 5	2SC460(B)	1st, 2nd AM IF Amp. (NPN)
Q6	2SC1345(D)	Audio Amp. (NPN)
IC1	HA1314	(Integrated Circuit) Audio Power Output

FM TUNER SECTION

Q101	2SC535(B)	FM RF Amp. (NPN)
Q102,103	2SC461(C)	FM MIX., FM OSC (NPN)

AM TUNER SECTION

Q201,202	2SC460(B)	AM MIX., AM OSC

CHASSIS REMOVAL

1. Remove Tuning, Fine Tuning, Volume, Bass, Treble, Band Selector knobs.
2. Push button (D. Light, VU, Phono, AFC, Power) to "ON" position.
3. Remove batteries from the battery compartment.
4. Remove the two cabinet back mounting screws and remove the cabinet back.
5. Remove the three screws for protector board in battery compartment and remove the protector board.
6. Disconnect lead wires for ferrite bar antenna, pilot lamps, speakers and telescopic antenna.
7. Remove 4 pcs. of chassis mounting screws and then take out the chassis pulling it toward cabinet bottom.

DIAL CORD STRINGING

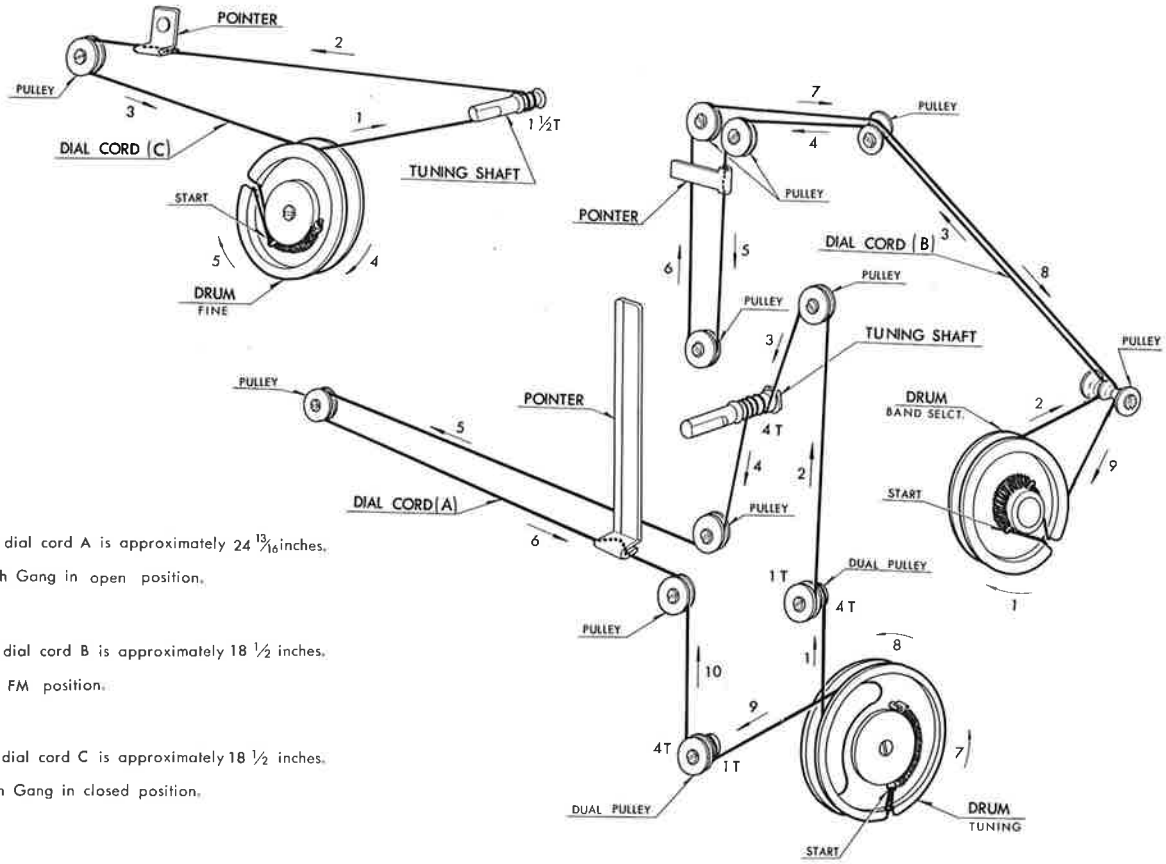

Overall length of dial cord A is approximately 24 13/16 inches.
Start stringing with Gang in open position.

Overall length of dial cord B is approximately 18 ½ inches.
Start stringing in FM position.

Overall length of dial cord C is approximately 18 ½ inches.
Start stringing with Gang in closed position.

ALIGNMENT

Equipment Required
1. RF Signal Generator
2. Electronic Voltmeter V.T.V.M.

General
1. Signal input must be as low as possible to avoid overload and clipping. (Use highest sensitivity of output indicator)
2. Standard modulation is 400 Hz at 30% amplitude.
3. Connect 8 ohm dummy load acorss EAR. Jack.
4. Fine tuning is mechanical center.

Step	Connect Signal Source To-	Connect Output Indicator To-	Set Signal Generator To-	Set Radio Dial To-	Adjust-	Adjust For-	Step
Set Function Switch to MW							
1	Loop of several turns of wire connected across gen. leads. Place loop close to the AM antenna.	A.C.V.T.V.M. across EAR. Jack	455 KHz	Tuning gang closed	T201 T5 T6	Maximum output on V.T.V.M.	1
2			505 KHz	Tuning gang closed	L206		2
3			1680 KHz	Tuning gang open	TC207		3
4	Repeat Steps 2 and 3 for optimum sensitivity						4
5	Same as above	A.C.V.T.V.M. across EAR. Jack	600 KHz	Tune for signal	L201–2	Maximum output	5
6			1400 KHz		TC202		6
7	Repeat Steps 5 and 6 for optimum sensitivity						7
Set Function Switch to LW							
1	Same as above	A.C.V.T.V.M. across EAR. Jack	145 KHz	Tuning gang closed	L205	Maximum output on V.T.V.M.	1
2			415 KHz	Tuning gang open	TC206		2
3	Repeat Steps 1 and 2 for optimum sensitivity						3
4	Same as above	A.C.V.T.V.M. across EAR. Jack	180 KHz	Tune for signal	L201–1	Maximum output	4
5			380 KHz		TC201		5
6	Repeat Steps 4 and 5 for optimum sensitivity						6

Set Function Switch to SW1							
1	Place gen. lead across telescopic antenna	A.C.V.T.V.M. across EAR. Jack	1.52MHz	Tuning gang closed	L207	Maximum output on V.T.V.M.	1
2			4.7 MHz	Tuning gang open	TC208		2
3	Repeat Steps 1 and 2 for optimum sensitivity						3
4	Same as above	A.C.V.T.V.M. across EAR. Jack	2 MHz	Tune for signal	L202	Maximum output on V.T.V.M.	4
5			4 MHz		TC203		5
6	Repeat Steps 4 and 5 for optimum sensitivity						6
Set Function Switch to SW2							
1	Same as above	A.C.V.T.V.M. across EAR. Jack	4.28MHz	Tuning gang closed	L208	Maximum output on V.T.V.M.	1
2			12.5MHz	Tuning gang open	TC209		2
3	Repeat Steps 1 and 2 for optimum sensitivity						3
4	Same as above	A.C.V.T.V.M. across EAR. Jack	5 MHz	Tune for signal	L203	Maximum output on V.T.V.M.	4
5			12 MHz		TC204		5
6	Repeat Steps 4 and 5 for optimum sensitivity						6
Set Function Switch to SW3							
1	Same as above	A.C.V.T.V.M. across EAR. Jack	11.7 MHz	Tuning gang closed	L209	Maximum output on V.T.V.M.	1
2			27.2 MHz	Tunign gang open	TC210		2
3	Repeat Steps 1 and 2 for optimum sensitivity						3
4	Same as above	A.C.V.T.V.M. across EAR. Jack	14 MHz	Tune for signal	L204	Maximum output on V.T.V.M.	4
5			26 MHz		TC205		5
6	Repeat Steps 4 and 5 for optimum sensitivity						6
Set Function Switch to FM (IF Alignment)							
1	Place gen. leads across telescopic antenna	A.C.V.T.V.M. across EAR. Jack	10.7 MHz	Tuning gang closed	T101 T102 T1 T2 T3	Maximum output on V.T.V.M.	1
2		DC probe across C14	10.7 MHz (Unmod.)		T4	Zero reading, a positive or negative reading will be obtained on either side of correct setting.	2
3	Repeat Steps 1 and 2 for optimum sensitivity						3
4	Same as above	A.C.V.T.V.M. across EAR. Jack	87 MHz	Tuning gang closed	L103	Maximum output on V.T.V.M.	4
5			109.5 MHz	Tuning gang open	TC102		5
6	Repeat Steps 4 and 5 for optimum sensitivity						6
7	Same as above	A.C.V.T.V.M. across EAR. Jack	88 MHz	Tune for signal	L102	Maximum output on V.T.V.M.	7
8			108 MHz		TC101		8
9	Repeat Steps 7 and 8 for optimum sensitivity						9

ALIGNMENT LAYOUT

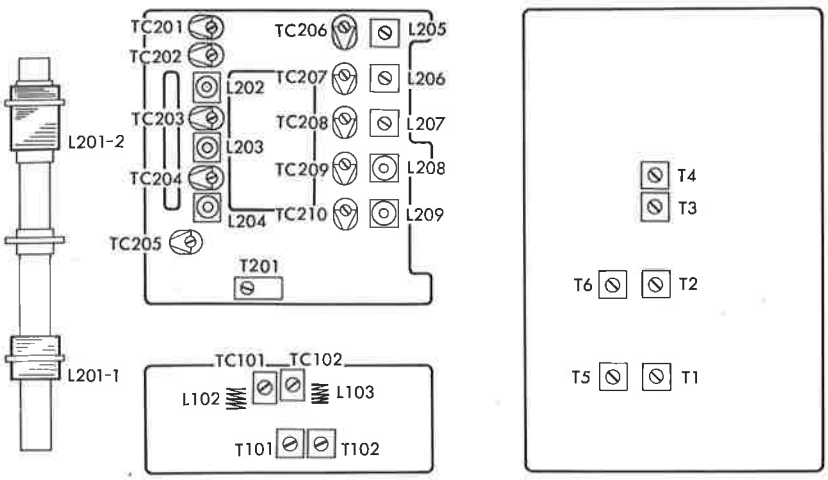

FM AND AM TUNER (P.C BOARD-WIRING)

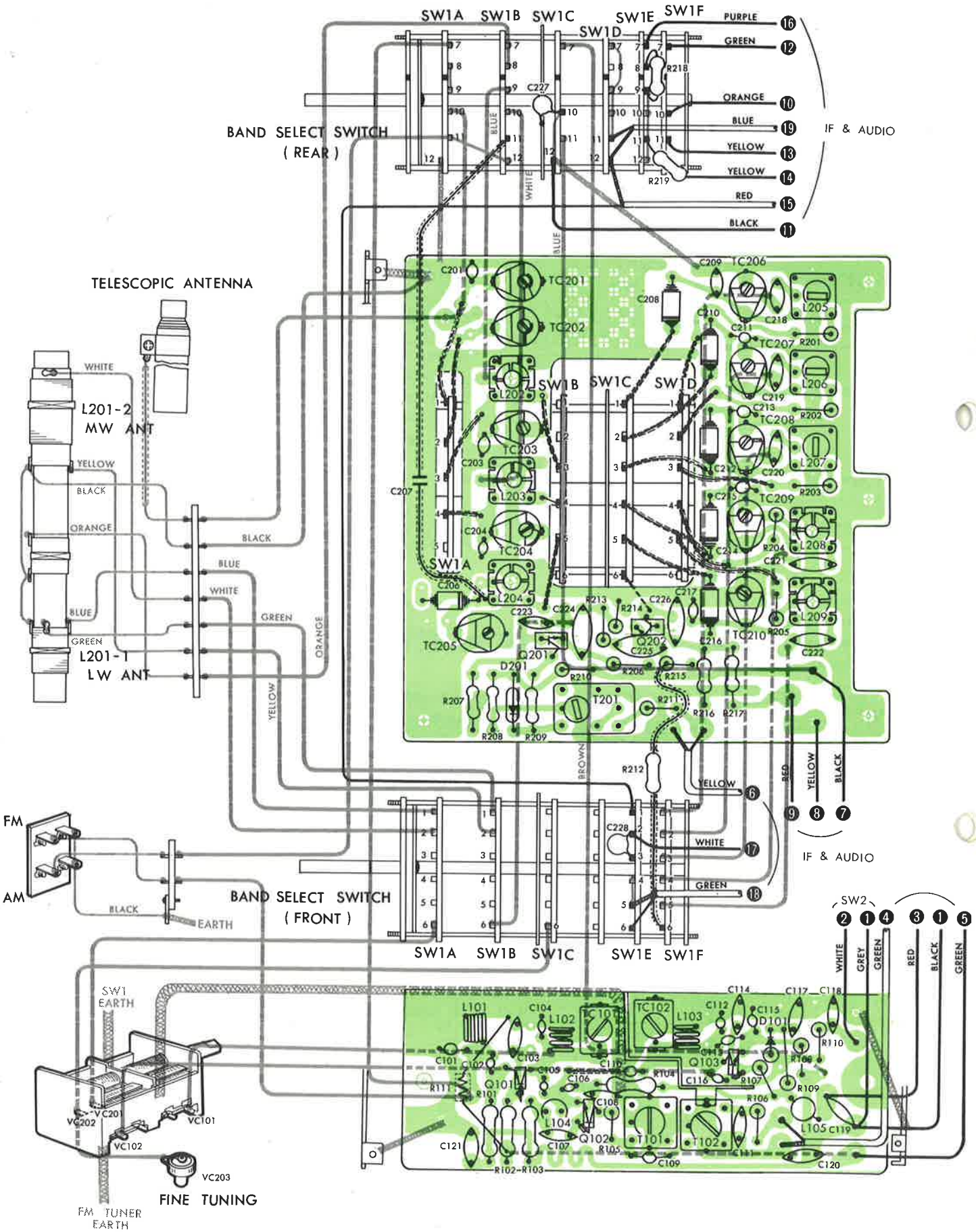

FM/AM IF & AUDIO AND CONTROL (P.C. BOARD-WIRING)

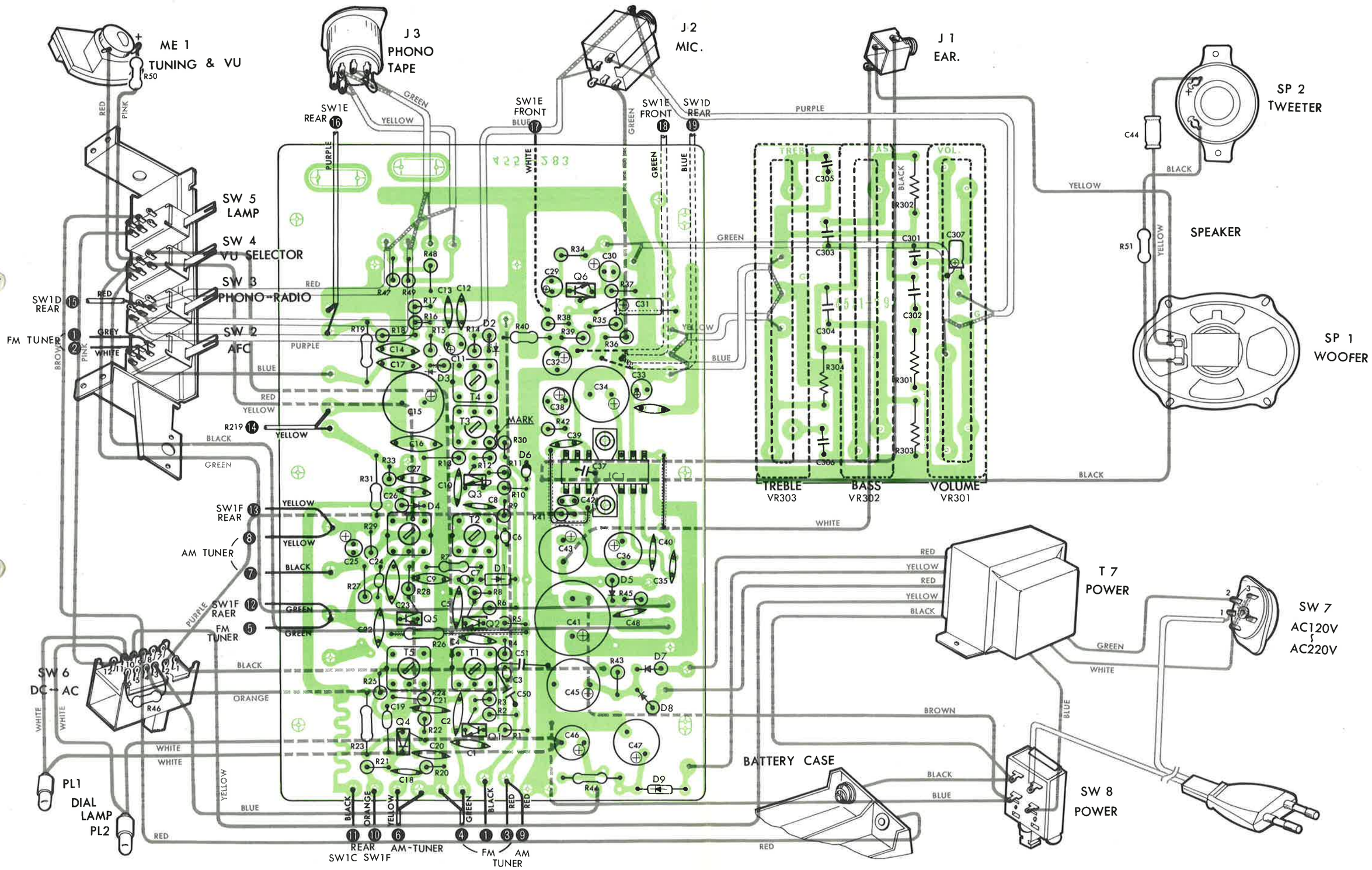

SCHEMATIC DIAGRAM

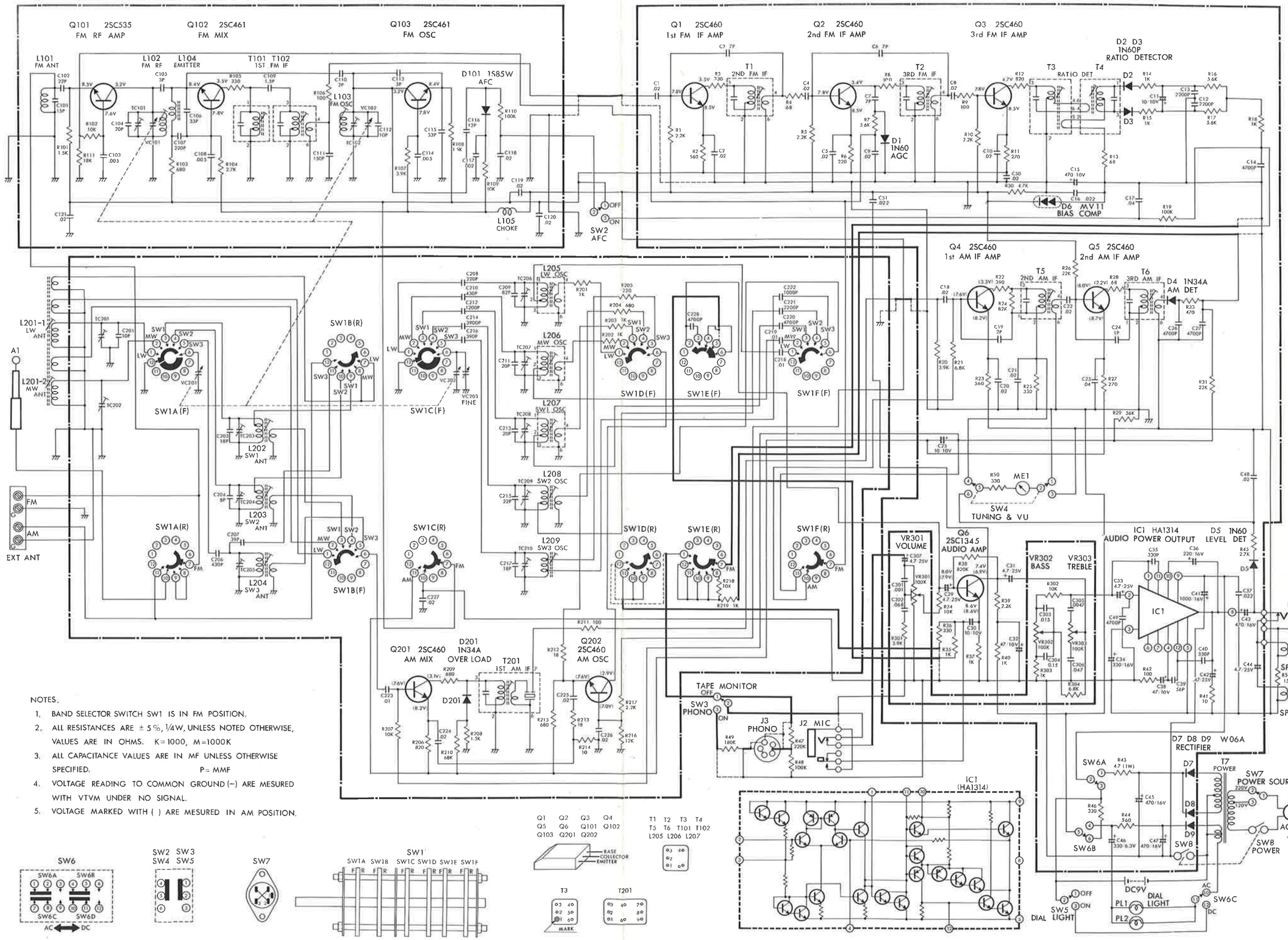

NOTES.

1. BAND SELECTOR SWITCH SW1 IS IN FM POSITION.
2. ALL RESISTANCES ARE ± 5%, 1/4W, UNLESS NOTED OTHERWISE, VALUES ARE IN OHMS. K=1000, M=1000K
3. ALL CAPACITANCE VALUES ARE IN MF UNLESS OTHERWISE SPECIFIED. P= MMF
4. VOLTAGE READING TO COMMON GROUND (–) ARE MESURED WITH VTVM UNDER NO SIGNAL.
5. VOLTAGE MARKED WITH ( ) ARE MESURED IN AM POSITION.

ELECTRICAL PARTS LIST

FM/AM IF & AUDIO SECTION

RESISTORS

(All resistors ¼W, ±5% Carbon unless otherwise noted)

REF. NO.	PART NO.	DESCRIPTION
R1,5,10,39	5154-222511	2.2 k ohm
R2,44	5154-561511	560 ohm
R3,25,36	5154-331511	330 ohm
R4,13,28	5154-680511	68 ohm
R6	5154-221511	220 ohm
R7	5134-562511	5.6 k ohm
R8,9,42	5154-101511	100 ohm
R11,27	5154-271511	270 ohm
R12	5154-821511	820 ohm
R14,15,18, 35,37	5154-102511	1 k ohm
R16,17	5154-562511	5.6 k ohm
R19,48	5134-104511	100 k ohm
R20	5154-392511	3.9 k ohm
R21	5154-682511	6.8 k ohm
R22	5154-391511	390 ohm
R23	5134-561511	560 ohm
R24	5154-823511	82 k ohm
R26,31	5134-223511	22 k ohm
R29	5154-563511	56 k ohm
R30	5154-472511	4.7 k ohm
R33	5154-471511	470 ohm
R34	5154-103511	10 k ohm
R38	5154-824511	820 k ohm
R40	5134-102511	1 k ohm
R41	5154-100511	10 ohm
R43	5136-4R7612	4.7 ohm. (1W)
R45	5154-272511	2.7 k ohm
R46,50	5134-331511	330 ohm
R47	5154-224511	220 k ohm
R49	5154-184511	180 k ohm
R51	5134-150511	15 ohm

CAPASITORS

REF. NO.	PART NO.	DESCRIPTION
C1,2,4,5,8, 9,10,18, 20,21,22, 48,50	5361-203093	0.02 MF + 80%, -20% 25V Caramic
C3,6,7	5361-070092	7PF ±0.5PF 50V Ceramic
C11,25,30	5345-1060212	10MF +100%, -10% 10V Electrolytic
C12,13	5362-222093	2200PF ±20% 50 Ceramic
C14,26,27, 49	5362-472093	4700PF ±20% 50V Ceramic
C15	5345-4770212	470MF +100%, -10% 10V Electrolytic
C16,37,51	5362-223093	0.022MF ±20% 50V Ceramic
C17,23	5361-403093	0.04MF +80%, -20% 25V Ceramic
C19	5361-020093	2PF +80%, -20% 25V Ceramic
C24	5361-010092	1PF ±0.5PF 50V Ceramic
C29,33	5345-4750214	4.7MF +100%, -10% 25V Electrolytic
C31	5345-4750219	4.7MF +100%, -10% 25V Electrolytic
C32,38	5345-4760212	47MF +100%, -10% 10V Electrolytic
C34	5345-3370213	330MF +100%, -10% 16V Electrolytic
C35,40	5362-331093	330PF ±20% 50V Ceramic
C36	5345-2270213	220MF +100%, -10% 16V Electrolytic
C39	5361-560092	56PF ±10% 50V Ceramic
C41	5345-1080213	1000MF +100%, -10% 16V Electrolytic
C42	5346-474092	0.47MF +40%, -20% 10V Al. Solid
C43,45,47	5345-4770213	470MF +100%, -10% 16V Electrolytic
C44	5342-475011	4.7MF ±20% 25V Electrolytic
C46	5345-3370211	330MF +100%, -10% 6.3V Electrolytic

SEMICONDUCTORS

REF. NO.	PART NO.	DESCRIPTION
Q1,2,3	5613-460(C)	Transistor, 1st, 2nd, 3rd, FM IF Amp.
Q4,5	5613-460(B)	Transistor, 1st, 2nd AM IF Amp.
Q6	5613-1345(D)	Transistor, Audio Amp.
D1,5	5631-1N60	Diode, AGC, Level Det.
D2,3	5631-1N60P	Diode, Ratio Det.
D4	5631-1N34A	Diode, AM Det.
D6	5641-MV11	Varistor, Bias Compesation
D7,8,9	5632-W06A	Diode, Rectifier
IC1	5652-HA1314	Integrated Circuit, Audio Power Output

TRANSFORMERS

REF. NO.	PART NO.	DESCRIPTION
T1,2	5563-0063	Transformer, 2nd / 3rd FM IF
T3	5573-0085D	Transformer, Ratio Det. (Primary)
T4	5573-0055E	Transformer, Ratio Det. (Secondary)
T5	5553-0051	Transformer, 2nd AM IF
T6	5553-0301	Transformer, 3rd AM IF
T7	5584-00156	Transformer, Power

FM TUNER SECTION

RESISTORS

(All resistors ¼W, ±5% Carbon unless otherwise noted)

REF. NO.	PART NO.	DESCRIPTION
R101	5134-152511	1.5 k ohm
R102	5134-103511	10 k ohm
R103	5134-681511	680 ohm
R104	5134-272511	2.7 k ohm
R105	5154-331511	330 ohm
R106	5154-101511	100 ohm
R107	5154-392511	3.9 k ohm
R108	5154-152511	1.5 k ohm
R109	5154-103511	10 k ohm
R110	5154-104511	100 k ohm
R111	5134-183511	18 k ohm

CAPACITORS

REF. NO.	PART NO.	DESCRIPTION
C101	5361-150092	15PF ±10% 50V Ceramic
C102	5361-220092	22PF ±10% 50V Ceramic
C103,108 114	5361-502093	0.005MF +80%, -20% 25V Ceramic
C104	5361-200092	20PF ±10% 50V Ceramic
C105,113	5361-030092	3PF ±0.5PF 50V Ceramic
C106,115	5361-330092	33PF ±10% 50V Ceramic
C107	5362-221093	220PF ±20% 50V Ceramic
C109	5361-1R5092	1.5PF ±0.25PF 50V Ceramic
C110	5361-020092	2PF ±0.5PF 50V Ceramic
C111	5361-151092	150PF ±10% 50V Ceramic
C112	5361-100092	10PF ±10% 50V Ceramic
C116	5361-120092	12PF ±10% 50V Ceramic
C117	5361-222093	0.0022MF +80%, -20% 25V Ceramic
C118,119, 120,121	5361-203093	0.02MF +80%, -20% 25V Ceramic
TC101,102	5371-49	Trimmer, FM RF & FM OSC
VC101,102	5314-016	Variable Tuning Gang (includes: VC201, VC202)

SEMICONDUCTORS

REF. NO.	PART NO.	DESCRIPTION
Q101	5613-535(B)	Transistor, FM RF Amp.
Q102,103	5613-461(C)	Transistor, FM MIX & FM OSC
D101	5633-1S85W	Diode, FM AFC

COILS AND TRANSFORMERS

REF. NO.	PART NO.	DESCRIPTION
L101	5991-0115	Coil, FM Ant.
L102	5991-0175	Coil, FM RF
L103	5991-0035	Coil, FM OSC
L104,105	5995-0056	Coil, Emitter, Choke
T101,102	5563-0063	Transformer, 1st FM IF (Primary, Secondary)

AM TUNER SECTION

RESISTORS

(All resistors ¼W, ±5% Carbon unless otherwise noted)

REF. NO.	PART NO.	DESCRIPTION
R201,202, 203,219	5154-102511	1 k ohm
R204,215	5154-681511	680 ohm
R205	5154-221511	220 ohm
R206	5154-821511	820 ohm
R207,218	5134-103511	10 k ohm
R208	5134-152511	1.5 k ohm
R209	5134-681511	680 ohm
R210	5154-683511	68 k ohm

REF. NO.	PART NO.	DESCRIPTION
R211	5154-101511	100 ohm
R212	5134-180511	18 ohm
R213	5154-180511	18 ohm
R214	5154-100511	10 ohm
R216	5134-123511	12 k ohm
R217	5134-222511	2.2 k ohm

CAPACITORS

C201	5361-100092	10PF ±10% 50V Ceramic
C203,217	5361-180092	18PF ±10% 50V Ceramic
C204	5361-080092	8PF ±0.5PF 50V Ceramic
C206,210	5355-431561	430PF ±5% 50V Stylor
C207	5361-390092	39PF ±10% 50V Ceramic
C208	5355-221561	220PF ±5% 50V Stylor
C209	5361-820092	82PF ±10% 50V Ceramic
C211,213	5361-200092	20PF ±10% 50V Ceramic
C212	5355-122561	1200PF ±5% 50V Stylor
C214	5355-392561	3900PF ±5% 50V Stylor
C215	5361-220092	22PF ±10% 50V Ceramic
C216	5355-391561	390PF ±5% 50V Stylor
C218,219	5362-103093	0.01MF ±20% 50V Ceramic
C220,228	5362-472093	4700PF ±20% 50V Ceramic
C221	5362-222093	2200PF ±20% 50V Ceramic
C222	5362-102093	1000PF ±20% 50V Ceramic
C223	5361-103093	0.01MF +80%, -20% 25V Ceramic
C224,225, 226	5362-203093	0.02MF ±20% 50V Ceramic
C227	5361-203093	0.02MF +80%, -20% 25V Ceramic
VC201,202	5314-016	Variable tuning Gang (includes: VC101, VC102)
VC203	5321-039	Variable Tuning Gang (Fine)
TC201	5371-26	Trimmer, LW Ant.
TC202	5371-27	Trimmer, MW Ant.
TC203	5371-27	Trimmer, SW1 Ant.
TC204	5371-26	Trimmer, SW2 Ant.
TC205	5371-26	Trimmer, SW3 Ant.
TC206	5371-26	Trimmer, LW OSC
TC207	5371-27	Trimmer, MW OSC
TC208	5371-27	Trimmer, SW1 OSC
TC209	5371-26	Trimmer, SW2 OSC
TC210	5371-26	Trimmer, SW3 OSC

REF. No.	PART NO.	DESCRIPTION

SEMICONDUCTORS

Q201,202	5613-460(B)	Transistor, AM MIX & AM OSC
D201	5613-1N34A	Diode, Over Load

COILS AND TRANSFORMERS

L201-1,201-2	5913-32	Coil, LW & MW Ant.
L202	5943-0058	Coil, SW1 Ant.
L203	5943-0068	Coil, SW2 Ant.
L204	5943-0078	Coil, SW3 Ant.
L205	5923-0523	Coil, LW OSC
L206	5923-0533	Coil, MW OSC
L207	5923-0543	Coil, SW1 OSC
L208	5923-00914	Coil, SW2 OSC
L209	5923-01014	Coil. SW3 OSC
T201	5672-0032	Transformer, 1st AM IF

CONTROL SECTION

RESISTORS

(All resistors ¼W, ±5% Carbon)

R301	5134-392511	3.9 k ohm
R302	5134-103511	10 k ohm
R303	5134-102511	1 k ohm
R304	5134-682511	6.8 k ohm
VR301	5223-104026	100 k ohm VOLUME Control (Variable Resistor)
VR302	5223-104016	100 k ohm BASS Control (Variable Resistor)
VR303	5223-104016	100 k ohm TREBLE Control (Variable Resistor)

CAPACITORS

(All capacitors ±20% 50V Mylor)

C301	5354-102061	0.01MF
C302	5354-683061	0.068MF
C303	5354-153061	0.015MF
C304	5354-154061	0.15MF
C305	5354-472061	0.0047MF
C306	5354-473061	0.047MF
C307	5345-4750214	4.7MF +100%, -10% 25V Electrolytic

MISCELLANEOUS PARTS LIST

REF. NO.	PART NO.	DESCRIPTION
	1301-0152	Cabinet Ass'y
A1	1392-130014	Telescopic Antenna
	1321-331	Battery Case
SP1	5812-C180029	Speaker, 6 ohm (Woofer)
SP2	5811-C057019	Speaker, 4 ohm (Tweeter)
SW1A-F	4411-606021	Switch, Band Select.
SW2	4431-0102410	Switch, AFC
SW3	4431-0102410	Switch, PHONO ⟷ RADIO
SW4	4431-0102410	Switch, VU Select
SW5	4431-0102410	Switch, Dial Light
SW6	4421-04238	Switch, AC ⟷ DC
SW7	4411-104412	Switch, Power Source (AC, 120/240V)
SW8	4431-0102118	Switch, Power
ME1	4323-0610	Meter, Tuning & VU
PL1,2	5731-0900116	Lamp, Dial Light 9V, 35mA
	4161-4125	AC Line Cord
J1	4451-0019	Jack, Earphone
J2	4451-0033	Jack, Microphone
J3	4474-4	Jack, PHONO, TAPE
	4501-70	P.C. Board Ass'y, FM/AM IF & Audio
	4501-71	P.C. Board Ass'y, FM Tuner

REF. NO.	PART NO.	DESCRIPTION
	4501-72	P.C. Board Ass'y, AM Tuner
	4501-73	P.C. Board Ass'y, Control
	5821-C16038	Earphone
	1305-0165	Knob Ass'y, AFC, Light, VU, PHONO
	1305-0166	Knob Ass'y, Power
	1305-0167	Knob Ass'y, Volume, Bass, Treble
	1305-0168	Knob Ass'y, Band Select.
	1305-0169	Knob Ass'y, Fing Tuning
	1305-0170	Knob Ass'y, Tuning
	2631-01145	Pointer, Tuning
	2631-01123	Pointer, Band Select.
	2611-0132	Drum, Tuning
	2611-0518	Drum, Fine Tuning
	2611-0133	Drum, Band Select.
	2612-5621	Dual Pulley
	2612-5221	Pulley (Large)
	2612-5223	Pulley (Small)
	2602-040232	Tuning Shaft
	2602-040219	Tuning Shaft, Fing Tuning
	2641-05011	Dial Cord (A, B, C)

SHIN-SHIRASUNA ELECTRIC CORP., JAPAN **PLATA brand in U.S.A.**

1112-R0004 PRINTED IN JAPAN

72.5.3000 K P