NATIONAL SG-795

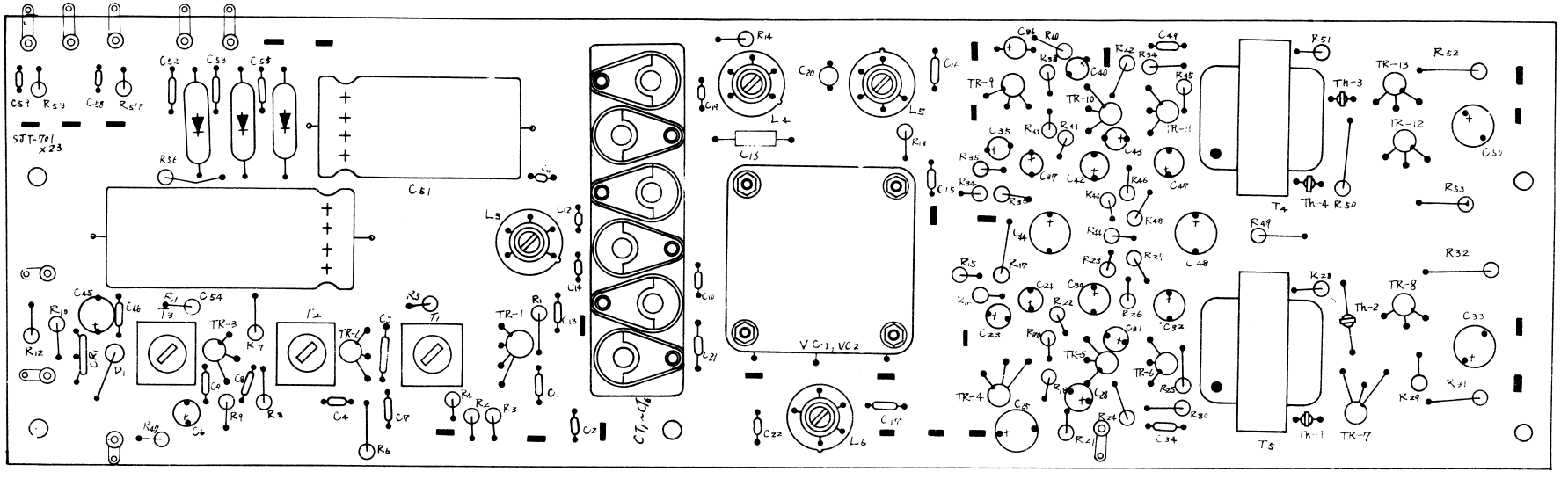

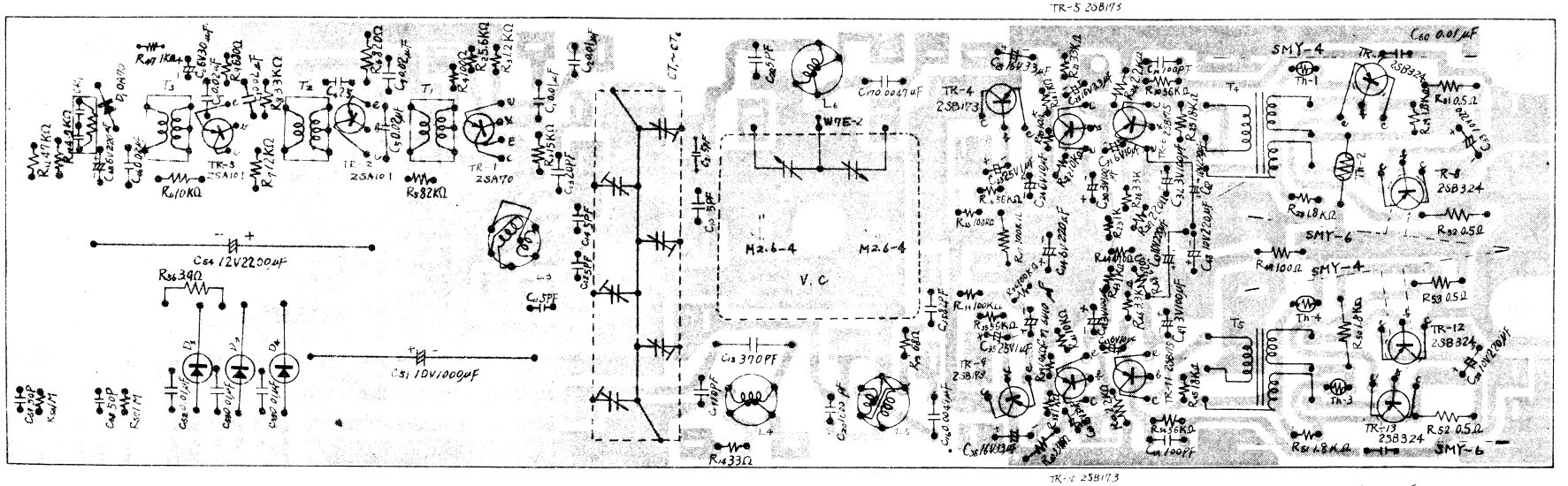

N179 National SG-795

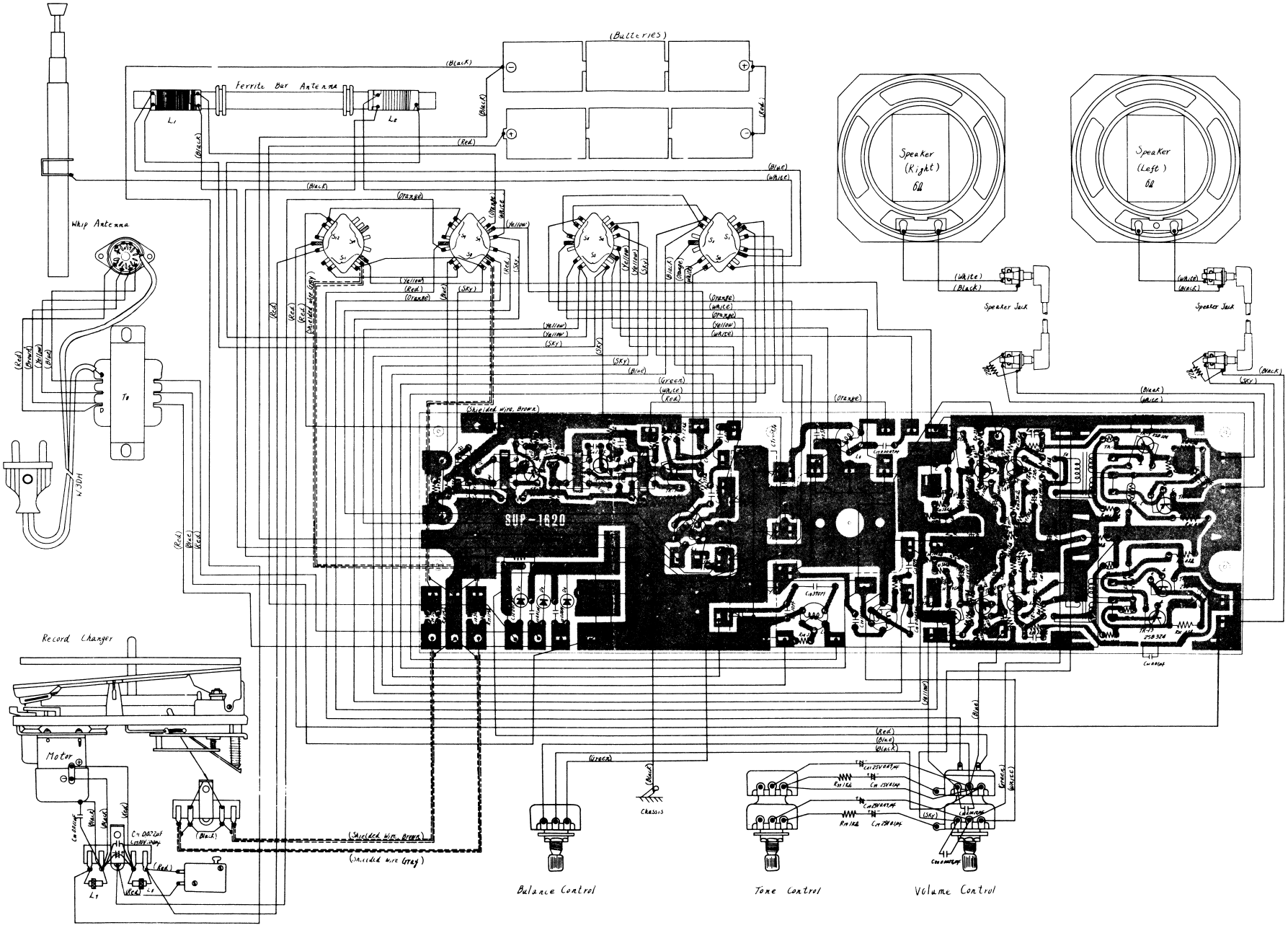

TR-1 2SA70 CONV.
TR-2 2SA101 1st I.F. AMP.
TR-3 2SA101. 2nd I.F. AMP.
D 1 OA-70 DET. & AGC.
TR-4 2SB173. Pre. AMP.
TR-5 2SB173. 1st AF. AMP.
TR-6 2SB175: 2nd AF. AMP.
TR-7, TR-8 2SB324x2 OUT. PUT.

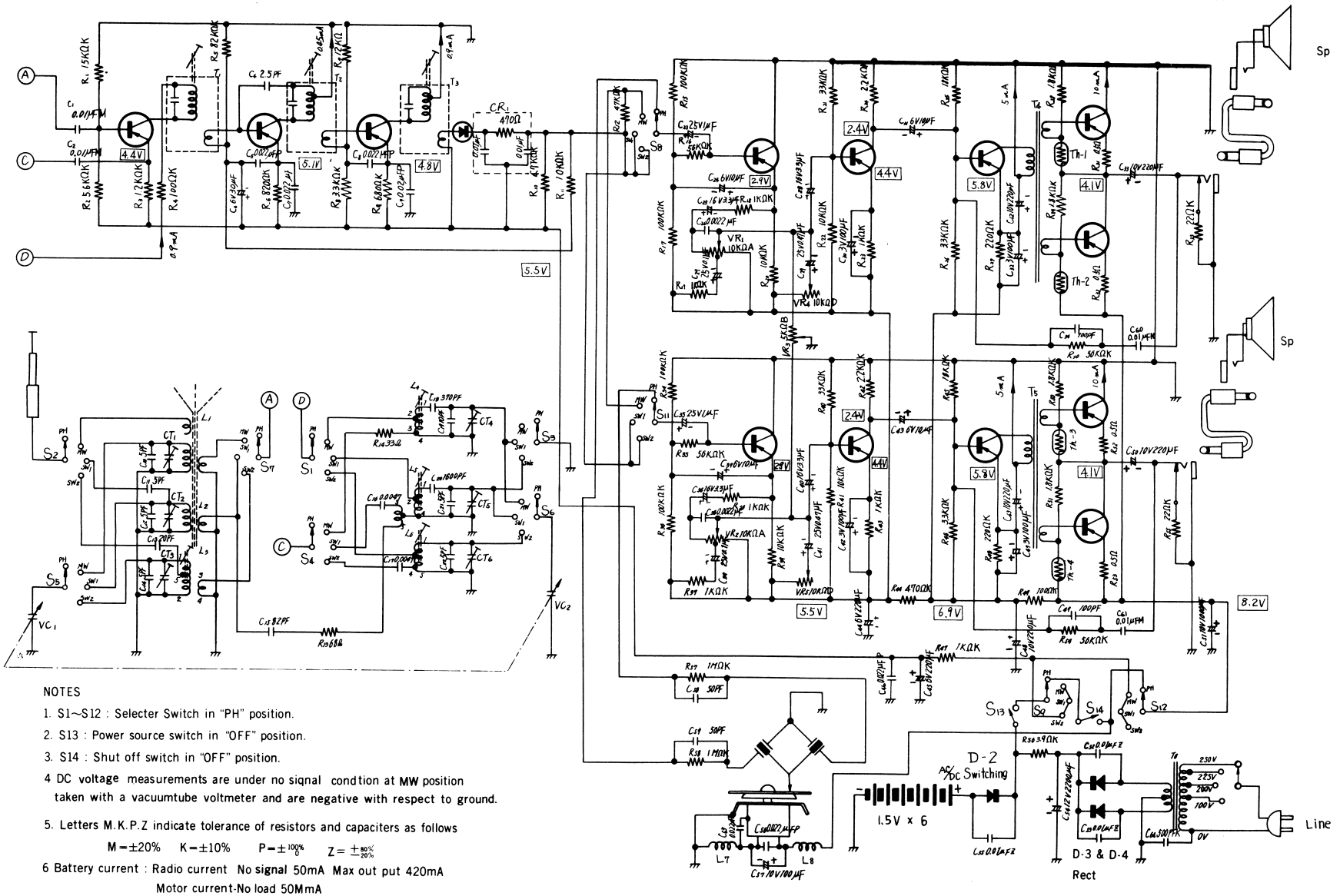

NOTES

1. S1~S12 : Selecter Switch in "PH" position.
2. S13 : Power source switch in "OFF" position.
3. S14 : Shut off switch in "OFF" position.
4. DC voltage measurements are under no signal condtion at MW position taken with a vacuumtube voltmeter and are negative with respect to ground.
5. Letters M.K.P.Z indicate tolerance of resistors and capaciters as follows
   M=±20% K=±10% P=$\pm^{100\%}_{0}$ Z=$\pm^{80\%}_{20\%}$
6. Battery current : Radio current No signal 50mA Max out put 420mA
   Motor current-No load 50MmA

ALIGNMENT PROCEDURE

OUTPUT METER ···Connect Output Meter across speaker voice coil terminals.

OUTPUT LEVEL ···Attenuate Signal Generator output always to maintain 0.63V on Output Meter to prevent overloading of the receiver.

SIGNAL GENERATER···Modulate Signal Generater at 400c/s, and connect the lead wires of Signal Generator output to Radiation Loop Coil.

RADIO RECEIVER ···Place the radio receiver 60cm (24") away from Radiation Loop Coil. Set volume control to maximum.

RADIATION LOOP COIL ···Make a 20 turns, 25cm (10") diameter bobbin, using 0.5mm or more copper wire.

IF & RF ALIGNMENT

ADJUST CIRCUIT	STEP	SIGNAL GENERATOR FREQUENCY	DAIAL SETTING	ADJUST	REMARKS
IF	1	455kc	Point of noninterference (on about 600kc)	T_1 T_2 T_3	Adjust for maximum output.
MW	2	550kc	550kc	L_4 (osc) L_1 (ant)	Adust for maximum output by sliding coil (L_1)along ferrit core.
	3	1500kc	1500kc	CT_4 (osc) CT_1 (ant)	Adjust for maximum output. Repeat steps (2) and (3)
SW_1	4	2.3MC	2.3MC	L_5 (osc) L_2 (ant)	Adjust for maximum output. by sliding coil. (L_6)along ferrite core.
	5	7MC	7MC	CT_5 (osc) CT_2 (ant)	Adjust for maximum output Repeat steps (4) and (5)
SW_2	6	7MC	7MC	L_6 (osc) L_3 (ant)	Adjust for maximum output.
	7	22MC	22MC	CT_6 (osc) CT_3 (ant)	Adjust for maximum output. Repeat steps (6) and (7)

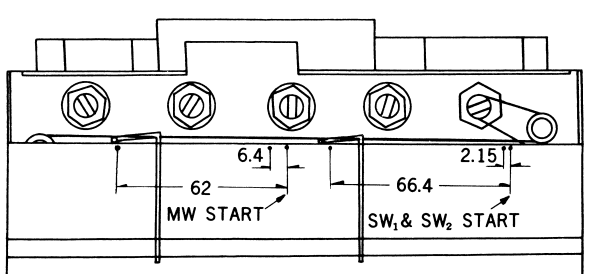

DIAL POINTER MOUNTING

3-BAND 13-TRANSISTOR 4-DIODE AC/BATTERY POWERED PORTABLE STEREO RADIO-PHONOGRAPH

MODEL SG-795

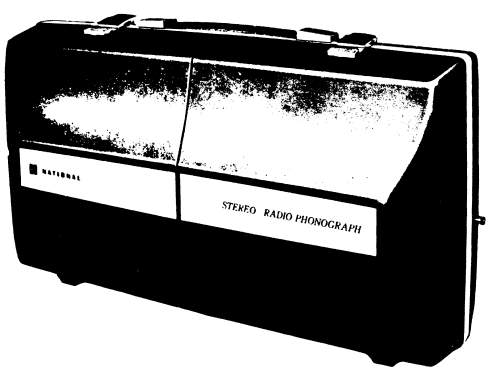

SPECIFICATIONS

Freq. Range:	MW 525–1605KC (571–187m) SW_1 2.3–7 MC (130–42.9m) SW_2 7–22 MC (42.9–13.6m)	Power Output:	1.3W–1.3W Undistorted 2W–2W Maximum 2.2W–2.2W P. M. P. O.
I.F.	455 KC	Batteries:	9V (Six "D" size Flashlight Batteries) (NATIONAL UM–1 or Equivalent)
Transistors:	2SA70 (x1) Converter 2SA101 (x2) IF. Amp. 2SB173 (x2) 1st AF Amp. 2SB173 (x2) 2nd AF. Amp. 2SB175 (x2) 3rd AF. Amp. 2SB324 (x4) Power output.	AC Power:	110V, 200V, 225V, 250V, 50–60c/s
		Speakers:	10cm High Compliance Speaker(6Ω) (x2)
		Record Changer:	4-Speed DC Changer
		Pickup Catridge:	EPC-35TTAD (with stylus)
		Stylus:	EPS-13TTSD (Diamond)
Germanium Diode:	OA70 (x1) Det. & AGC	Cabinet Dimensions:	480mm(W)X283mm(D)X177mm(H) (18⅞") (11¼") (7")
Silicon Diodes:	SW-05-01 (x3) Rectifier		
Thermistors:	ERT-D2BBK850W (x4) AOC	Net Weight:	6.85kg(without batteries) (15 lb ∠ oz) 7.45kg(with batteries) (16 lb 6 oz)
Sensitivity:	MW 100μV/m/50mW SW_1 100μV/m/50mW SW_2 10μV/50mW		