Private and Confidential

"HIS MASTER'S VOICE"

The Hallmark of Quality

For Trade Use Only

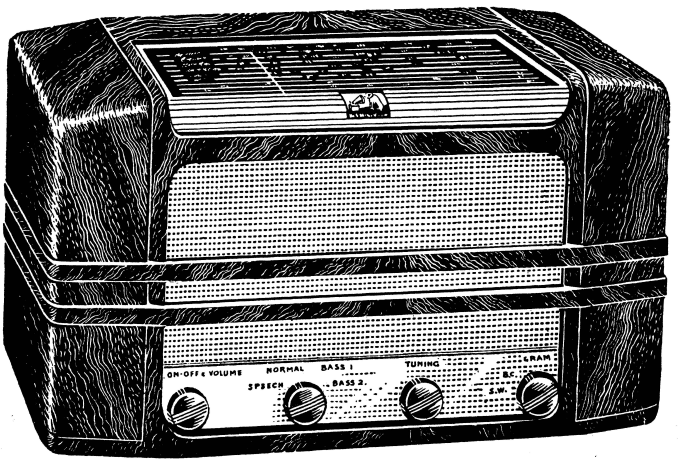

"His Master's Voice"
SERVICE MANUAL

for

SIX-VALVE

A.C. DUAL-WAVE RECEIVER

TABLE MODEL S23A

•

THE GRAMOPHONE COMPANY LTD.
(Incorporated in England)
HOMEBUSH - N.S.W.

TECHNICAL SPECIFICATION

POWER SUPPLY:
200 to 250 volts, 40 to 60 c.p.s.

CONSUMPTION:
70 watts.

TUNING RANGE:
Medium-Wave ..... 540 to 1600 Kc/s.
Short-Wave ..... 16.5 to 52 Metres.

VALVE COMPLEMENT:

6AN7	Frequency Changer.
6N8	I.F. Amp.-Demod.
6N8	1st A.F. Amp.-A.V.C.
6N8	2nd A.F. Amp.
6V6GT ...	Power.
5Y3GT ...	Rectifier.

DIAL LAMPS:
6.3 volts, 0.3 amp. (Min. screw-cap).

LOUDSPEAKER:
Voice coil impedance:
3.7 ohms at 400 c.p.s.
Permagnetic Ellipsoid Type:
C0546 or C0546A.

INTERMEDIATE FREQUENCY:
457.5 Kc/s.

DIMENSIONS:
Width ..... 19 ins.
Height ..... 11 ins.
Depth ..... 10¼ ins.

WEIGHT:
Gross ..... 34 lb. Nett ..... 28 lb.

CIRCUIT DESCRIPTION

This model incorporates a 6-valve A.C. mains-operated superheterodyne receiver for medium-wave and short-wave reception.

FREQUENCY CHANGER

On the medium-wave band, the aerial is coupled to the signal frequency circuit by means of an iron dust cored aerial transformer, L1-2. For short-wave reception, a short-wave aerial transformer, L5-6, is switched into circuit.

V1, which is a triode-hexode, is employed as frequency changer. The oscillator circuits are shunt fed and incorporate plate tuning. Fixed padding capacitors are used on both wave bands, and a variable padding adjustment is provided on the medium-wave band by an iron dust tuning bolt in the oscillator coil, L3-4.

I.F. AMPLIFIER-DEMOD.

The frequency changer is transformer coupled to a duo-diode pentode valve, V2, which amplifies at I.F. frequency. With the wave-change switch set to "Local" position, increased bandwidth is secured by the introduction of top coupling and also loading resistors across primary and secondary circuits of the first I.F. transformer. Neutralisation of this stage is effected by condenser, C17.

A second I.F. transformer serves to couple the I.F. output to the demodulator diode, where the signal is demodulated and appears across resistor R12.

1ST A.F. AMPLIFIER-A.V.C.

The I.F. output of the previous stage is capacity-coupled to one of the diodes of a duo-diode pentode, V3; the A.V.C. voltage obtained is applied to the frequency changer and I.F. amplifier stages; standing bias and A.V.C. delay voltage for these stages is supplied by the back bias resistor, R17. A fraction of the A.V.C. voltage is also supplied to the 1st Audio Amplifier valve, V3.

The pentode section of this valve amplifies at audio frequency and the input circuit may be switched to either the demodulator diode load or to the pick-up equaliser.

A weighted volume control circuit is employed to compensate for aural deficiencies at low volume levels. This is accomplished by introducing a degree of bass boost at low settings of the volume control.

The output circuit is resistance-capacity coupled through a tone control network to the second A.F. Amplifier, V4. The tone controls provide five degrees of bass and treble cut.

2ND A.F. AMPLIFIER

This stage incorporates a pentode valve, the output of which is resistance-capacity coupled to the power valve.

POWER STAGE

The output valve, V5, is a beam power tetrode and is coupled to the speaker voice coil through a step-down transformer. Considerable inverse feedback is used, the feedback voltage being taken from the output transformer secondary and fed back to the cathode circuit of the penultimate valve. A phasing network, comprising C37 and R31, is connected across the transformer primary.

HIGH TENSION SUPPLY

The power supply employs a directly-heated type high-vacuum rectifier, V6. The filter circuit consists of an iron-cored choke, CK1, and two electrolytic condensers, C29 and C33. The mains supply is switched by S3, which is incorporated with the Volume Control, VR1.

DISMANTLING

REMOVAL OF CHASSIS

(1) Disconnect power plug from supply mains.
(2) Disconnect Aerial and Earth wire.
(3) Remove chassis fixing screws at rear of cabinet.
(4) Withdraw chassis from cabinet.

RECEIVER ALIGNMENT PROCEDURE

In any case where a component replacement has been made in either the tuned I.F. or R.F. circuits of a receiver, all circuits must be realigned. I.F. alignment should always precede R.F. alignment, and even if only one coil has been serviced, the whole of the realignment should be done in the order given. An output meter should always be connected across the voice coil terminals of the speaker to indicate when the circuits are tuned to resonance. In carrying out the following operations, it is important that the input to the receiver from the signal generator should be kept low and progressively reduced as the circuits are brought into line, so that the output meter reading does not exceed about 1 volt.

I.F. ALIGNMENT

Set receiver controls as follows:

Volume Control	Max.
Tone Control	Pos. 3.
Wave-Change	Med.-Wave "Distant".
Tuning Control	Condenser fully enmeshed.

(1) Connect the output of a signal generator through a 0.1 mF. condenser to the stator plates of the front section of the ganged condenser.
(2) Tune the signal generator to exactly 457.5 Kc/s.
(3) Adjust the I.F. transformer trimmer screws for maximum reading on the output meter, commencing with the second I.F. transformer and following with the first.
(4) Continue this alignment on each transformer in turn until no greater output can be obtained. It is necessary to repeat this procedure twice to ensure correct alignment.

Note: If the trimmer screws are screwed too far in, it may be possible to obtain a false peak due to coupling effects between the iron cores. Start alignment of each individual transformer by first screwing its core well out, and then advancing the core into the coil until resonance is obtained.

R.F. ALIGNMENT (MEDIUM-WAVE)

(1) With the controls set as for I.F. alignment, connect the signal generator output leads in series with a 200 mmF. condenser to the aerial and earth terminals of the receiver.
(2) Check that, when the gang is fully enmeshed, the pointer coincides with the setting line at the extreme right-hand side of the dial scale.
(3) Tune the signal generator to 600 Kc/s.
(4) Rotate the tuning knob until the pointer is exactly under the 600 Kc/s calibration mark on the dial and adjust the padder screw for maximum response.
(5) Tune the signal generator to 1500 Kc/s.
(6) Rotate the tuning knob until the pointer coincides with the 1500 Kc/s calibration mark and adjust the oscillator trimmer and aerial trimmer in turn for maximum response.
(7) Repeat operations (3) to (6) inclusive for correct alignment.

R.F. ALIGNMENT (SHORT-WAVE)

(1) Set wave-change switch to "Short-wave" (extreme anti-clockwise) position. Remove the 200 mmF. condenser from the output lead of a signal generator and replace with a 400 ohm non-inductive resistor; connect to the aerial and earth terminals as before.

(2) Rotate the tuning knob until the pointer coincides with 17 Mc/s calibration mark.

(3) Tune signal generator to 17 Mc/s.

(4) Adjust the S-W oscillator trimmer for maximum output. Two settings may be found at which this trimmer will peak; care must be taken that the setting finally chosen is that which gives the lowest capacity. Failure to select the correct position of the two will cause serious tracking error and loss of sensitivity.

(5) Tune the signal generator and receiver to 17.5 Mc/s.

(6) Adjust the S-W aerial trimmer for maximum output whilst "rocking" the gang condenser slightly to obtain the true resonance point.

(7) Note that the signal is still tuned in correctly on the dial; if not, readjust the S-W oscillator trimmer slightly until the dial reads correctly, and repeat operation (6).

ADDITIONAL DATA

Any further information desired may be obtained by addressing an enquiry to the "Service Department, The Gramophone Co. Ltd., 2 Parramatta Road, Homebush, N.S.W."

- MODEL S23A -

ALIGNMENT

I.F. 457·5 K.C.

B/C { OSC. 600 & 1500 K.C.
AER. _____ 1500 K.C. }

S/W { OSC. 17·00 MC.
AER. 17·50 MC. }

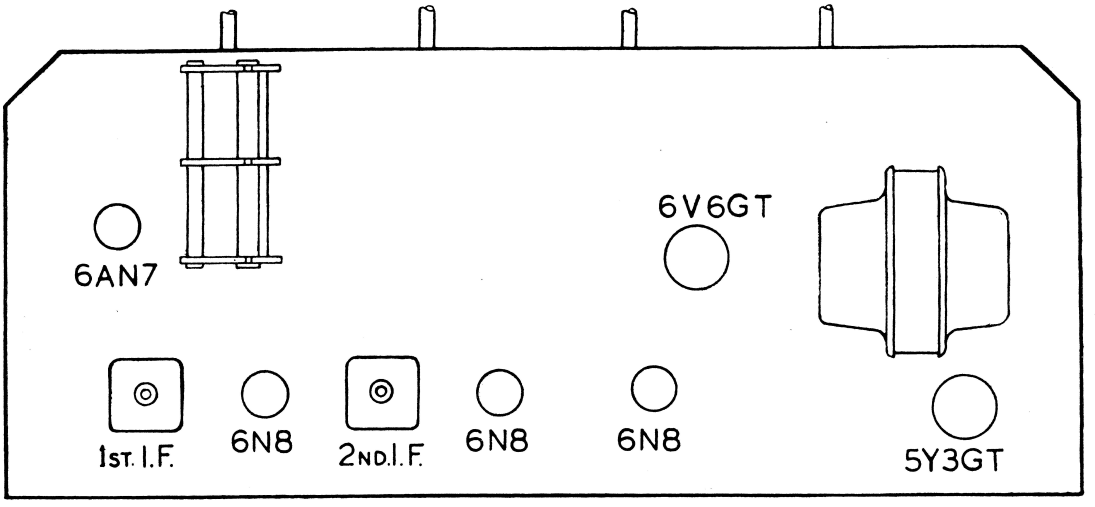

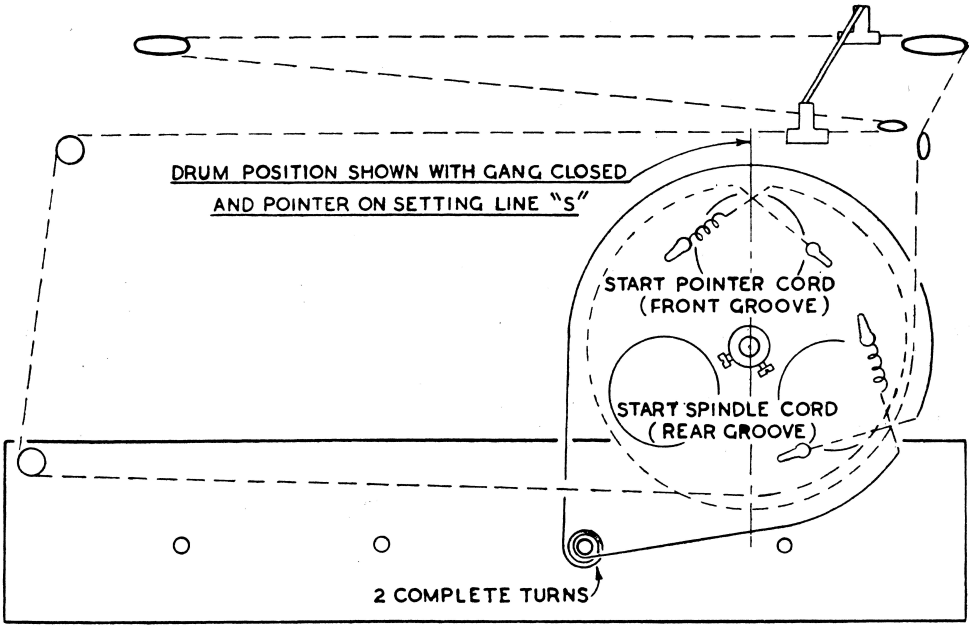

CO585

VOLTAGE TABLE

(MODEL-S23A)

- VOLTAGES AND CURRENTS ARE WITH THE RECEIVER OPERATING ON AVERAGE MAINS VOLTAGE AND TUNED TO A POINT OF NO RECEPTION ON THE BROADCAST BAND.
- VOLTAGE READINGS TAKEN WITH METER RESISTANCE OF 1,000 OHMS PER VOLT
- VOLTAGE AND CURRENT READINGS WITHIN ± 15 %.
- RESISTANCE READINGS ARE APPROXIMATE.

VOLTS TO CHASSIS	CURRENT M.A.	RESISTANCE TO CHASSIS	VALVE ELECTRODE	BOTTOM VIEW OF VALVE SOCKET	VALVE ELECTRODE	VOLTS TO CHASSIS	CURRENT M.A.	RESISTANCE TO CHASSIS
			V1	6AN7	FREQUENCY CHANGER			
—	—	—	HEATER	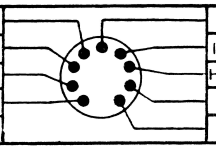	HEATER	6·25 A.C.	230 A.C	—
—	7·15	—	CATHODE		INTERNAL CON	—	—	—
—	—	3·1 MEG Ω	CONTROL GRID		HEXODE PLATE	174	1·65	50 K Ω
62	2·1	25 K Ω	SCREEN GRID		OSC PLATE	66	3·10	80 K Ω
					OSC GRID	—	—	50 K Ω
			V2	6N8	I.F AMPLIFIER - DEMODULATOR			
—	—	—	HEATER	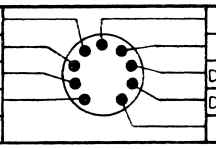	HEATER	6·25 A.C.	300 A.C.	—
—	7·2	—	CATHODE		PLATE	235	5·3	55 K Ω
—	—	3 MEG Ω	CONTROL GRID		DIODE N°1 PLATE	—	—	140 K Ω
75	1·9	100 K Ω	SCREEN GRID		DIODE N°2 PLATE	—	—	—
					SUPP. GRID	—	—	—
			V3	6N8	1ST A F. AMPLIFIER - A V.C			
—	—	—	HEATER	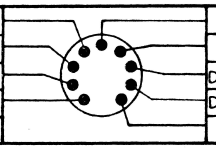	HEATER	6·25 A.C	300 A C	—
0·8	1·55	500 Ω	CATHODE		PLATE	35	1·1	205 K Ω
—	—	2 MEG Ω	CONTROL GRID		DIODE N°1 PLATE	—	—	1 MEG Ω
25	0·45	405 K Ω	SCREEN GRID		DIODE N°2 PLATE	—	—	—
					SUPP. GRID	0·8	—	500 Ω
			V4	6N8	2ND. A.F. AMPLIFIER			
—	—	—	HEATER	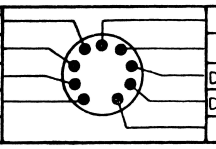	HEATER	6·25 A.C	300 A.C.	—
1·0	1·2	1200 Ω	CATHODE		PLATE	20	0·9	305 K Ω
—	—	19200 Ω	CONTROL GRID		DIODE N°1 PLATE	—	—	—
22	0·3	805 K Ω	SCREEN GRID		DIODE N°2 PLATE	—	—	—
					SUPP. GRID	1·0	—	1200 Ω
			V5	6V6-GT	OUTPUT			
235	4·9	55 K Ω	SCREEN GRID	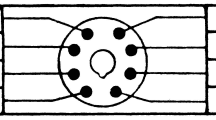	GRID	—	—	500 K Ω
218	38	55 K Ω	PLATE					
—	—	—	HEATER		HEATER	6·25 A.C	450 A.C	—
			NO CONN		CATHODE	11·0	42·9	250 Ω
			V6	5Y3GT	RECTIFIER			
285 A.C	—	485 Ω	PLATE N° 2	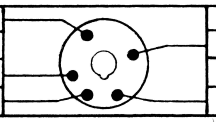				
					PLATE N° 1	285 A C	—	500 Ω
235	2AA.C.	55 K Ω	FILAMENT					
			NO CONN		FILAMENT	235	2A.A.C	55 K Ω

REMARKS:-

UNFILTERED H.T. VOLTAGE	=	280 V TO CHASSIS.
FILTERED H.T. VOLTAGE	=	235 V. TO CHASSIS.
TOTAL H.T. CURRENT	=	63 MA.
BLEEDER CURRENT	=	3 MA.
BACK-BIAS VOLTAGE	=	1·95 V.

CO584

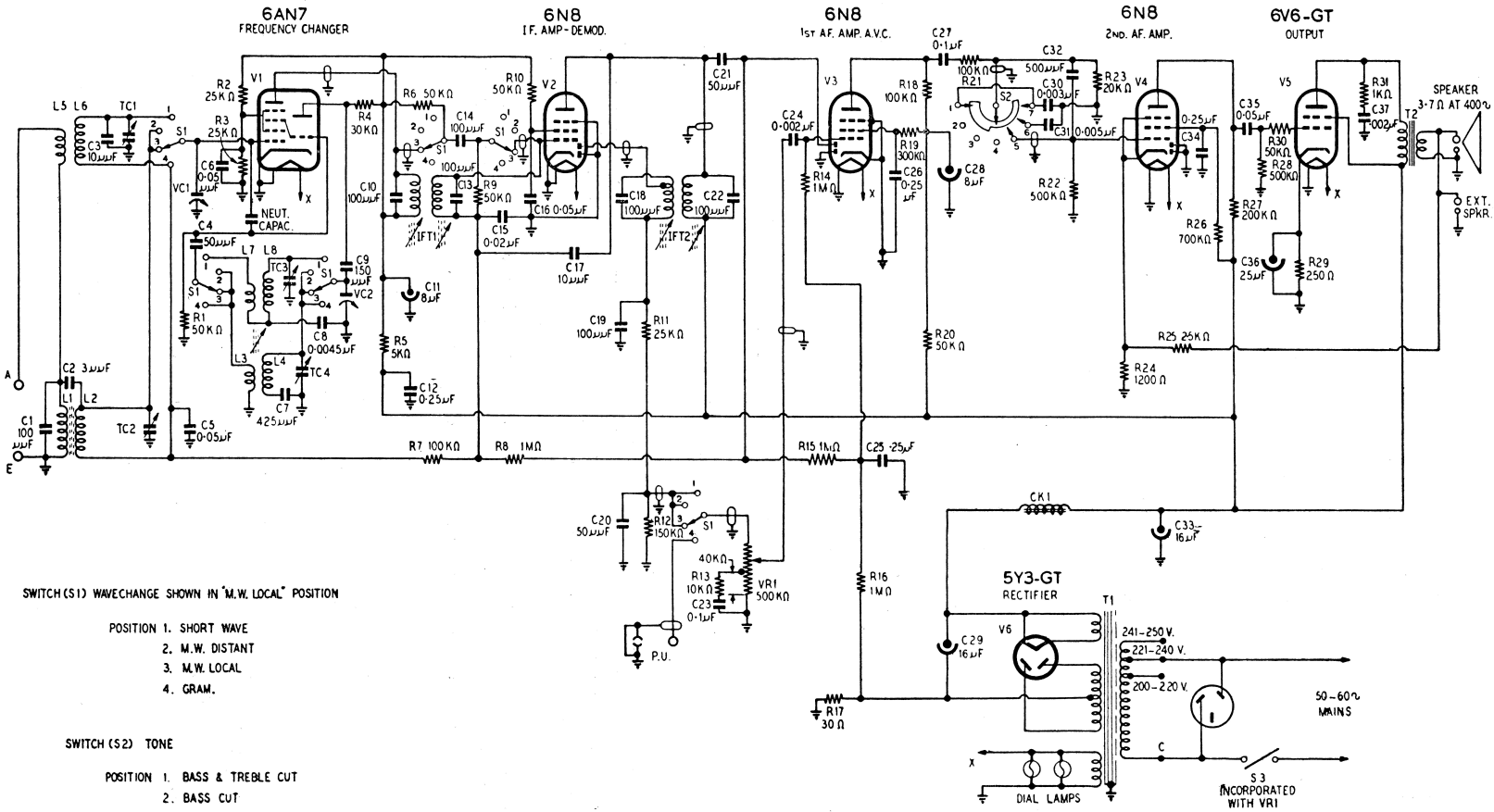

SWITCH (S1) WAVECHANGE SHOWN IN "M.W. LOCAL" POSITION

POSITION 1. SHORT WAVE
2. M.W. DISTANT
3. M.W. LOCAL
4. GRAM.

SWITCH (S2) TONE

POSITION 1. BASS & TREBLE CUT
2. BASS CUT
3. NORMAL
4. TREBLE CUT 1
5. TREBLE CUT 2

— CIRCUIT DIAGRAM — MODEL S23A —

PARTS LIST

RESISTORS

REF.	PART No.	DESCRIPTION
R1	H2X	50,000 ohms ½ watt ± 10%
R2	AE3X	25,000 ohms 1 watt ± 10%
R3	AE3X	25,000 ohms 1 watt ± 10%
R4	W3X	30,000 ohms 1 watt ± 10%
R5	X3X	5,000 ohms 1 watt ± 10%
R6	H2X	50,000 ohms ½ watt ± 10%
R7	J2X	100,000 ohms ½ watt ± 10%
R8	P2X	1 megohm ½ watt ± 10%
R9	H2X	50,000 ohms ½ watt ± 10%
R10	H2X	50,000 ohms ½ watt ± 10%
R11	AE2X	25,000 ohms ½ watt ± 10%
R12	K2X	150,000 ohms ½ watt ± 10%
R13	F2X	10,000 ohms ½ watt ± 10%
R14	P2X	1 megohm ½ watt ± 10%
R15	P2X	1 megohm ½ watt ± 10%
R16	P2X	1 megohm ½ watt ± 10%
R17	CBW2X	30 ohms ½ watt ± 10%
R18	J3X	100,000 ohms 1 watt ± 10%
R19	BO3X	300,000 ohms 1 watt ± 10%
R20	H3X	50,000 ohms 1 watt ± 10%
R21	J2X	100,000 ohms ½ watt ± 10%
R22	O2X	500,000 ohms ½ watt ± 10%
R23	V2X	20,000 ohms ½ watt ± 10%
R24	BU3X	1,200 ohms 1 watt ± 10%
R25	BR2X	2,500 ohms ½ watt ± 10%
R26	DU3X	700,000 ohms 1 watt ± 10%
R27	L3X	200,000 ohms 1 watt ± 10%
R28	O2X	500,000 ohms ½ watt ± 10%
R29	ZW3X	250 ohms 1 watt ± 10%
R30	H2X	50,000 ohms ½ watt ± 10%
R31	D3X	1,000 ohms 1 watt ± 10%

CONDENSERS

REF.	PART No.	DESCRIPTION
C1	D0243P	100 mmF. ± 10%
C2	D0243BU	3 mmF. ± 1 mmF.
C3	D0243BJ	10 mmF. ± 10%
C4	D0243Q	50 mmF. ± 10%
C5	C0013M	.05 mF. 200V. wkg.
C6	C0013G	.05 mF. 400V. wkg.
C7	D0243CW	425 mmF. ± 5%
C8	D0243DC	.0045 mF. ± 2½%
C9	D0243DB	150 mmF. ± 10%
C10	D4405W	100 mmF. ± 5%
C11	C0014G	8 mF. 525P.V. Electro.
C12	C0013C	.25 mF. 400V. wkg.
C13	D4405W	100 mmF. ± 5%
C14	D0243P	100 mmF. ± 10%
C15	C0013S	.02 mF. 600V. wkg.
C16	C0013G	.05 mF. 400V. wkg.
C17	D0243BJ	10 mmF. ± 10%
C18	D4405W	100 mmF. ± 5%
C19	D0243P	100 mmF. ± 10%
C20	D0243Q	50 mmF. ± 10%
C21	D0243Q	50 mmF. ± 10%
C22	D4405W	100 mmF. ± 5%
C23	C0013Q	.1 mF. 200V. wkg.
C24	D0243H	.002 mF. ± 10%
C25	C0013C	.25 mF. 400V. wkg.
C26	C0013C	.25 mF. 400V. wkg.
C27	C0013E	.1 mF. 400V. wkg.
C28	C0014CA	8 mF. 525P.V. Electro.
C29	C0014BZ	16 mF. 525P.V. Electro.
C30	D0243E	.003 mF. ± 10%
C31	D0243C	.005 mF. ± 10%
C32	D0243L	500 mmF. ± 10%
C33	C0014CB	16 mF. 525P.V. Electro.
C34	C0013C	.25 mF. 400V. wkg.
C35	C0013G	.05 mF. 400V. wkg.
C36	C0014CC	25 mF. 40P.V. Electro.
C37	D0243H	.002 mF. ± 10%

MISCELLANEOUS

REF.	PART No.	DESCRIPTION
VC1-2	C0562	2-Gang Tuning Cond.
L1-2	D1614D/2	M/W Aerial Coil
L3-4	D3025	M/W Oscillator Coil
L5-6	D2321/2	S/W Aerial Coil
L7-8	D3026	S/W Oscillator Coil
IFT1	D3027	1st I.F. Transformer
IFT2	D3028	2nd I.F. Transformer
TC1	D2395	Trimmer Condenser
TC2	D2395	Trimmer Condenser
TC3	D2395	Trimmer Condenser
TC4	D2395	Trimmer Condenser
S1	C0582	Wave-Change Switch
S2	D3052	Tone Control Switch
VR1/S3	D3058	Volume Control, tapped, incorporating Switch
T1	D2358	Mains Transformer
T2	D3069	Output Transformer
CK1	D2357	H.T. Filter Choke
	D3065	Speaker Assembly
	C0587	Dial Scale
	D2394	Control Knob
	D2704	Dial Pointer Assembly
	D0873	Dial Cord Spring
	D2338	Dial Cord Pulley (wood)
	C0583	Control Indicator
	A0080	Cabinet