MITSUBISHI CAR AUDIO

SERVICE MANUAL

CASSETTE TAPE PLAYER WITH AM/FM•MPX

MODEL : RX-791EM

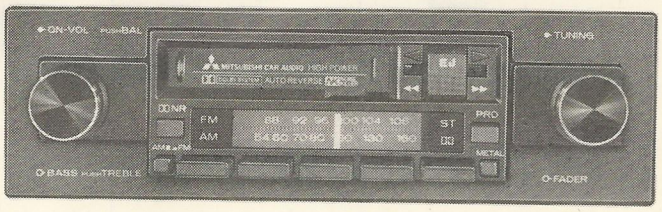

SPECIFICATIONS

FM TUNERS

Usable Sensitivity	22 dBf (3.5μV/75Ω)
Stereo Separation (at 1000Hz)	35 dB
Signal/Noise Ratio	64 dB
Tuning Range	88 to 108 MHz

AM TUNERS

Sensitivity (20dB S/N)	10μV
Selectivity (at 10 KHz)	43 dB
AGC Figure of Merit	55 dB
Signal/Noise Ratio	54 dB

AUDIO

MAX. Power Output per CH/4Ω	20W
Power Output at 5% THD	14W
Power Output at 1% THD	10W
Frequency Response (±3dB)	100 to 10KHz

TAPE

Track	4 Track 2 channel
Wow & Flutter	0.10% (Wrms)
Stereo Separation	40 dB
Signal/Noise Radio (A-Weighted)	Dolby NR off 120μS 51 dB 70μS 53 dB Dolby NR on 120μS 56 dB 70μS 57 dB
Cross talk	50 dB

General

Semiconductors	14 ICs, 8 TRs, 20 Diodes
Power Requirement	14.4V
Current Consumption	1.4 A at 1W
Dimensions (HxWxD)	1-31/32x7x5-7/8
Weight	4.6 lbs

MITSUBISHI ELECTRIC SALES AMERICA.INC.
7045 North Ridgeway Avenue, Lincolnwood, Illinois 60645
MELCO SALES CANADA INC.
911A Denison Street, Markham, Ontario L3R 3K4

FEATURES

- DIN chassis for imports
- 5 AM or 5 FM pushbutton tuning
- Separate AM/FM dial illumination (AM-amber, FM-green)
- FM ignition noise killer
- Autoreverse
- Locking fast-forward/fast rewind
- Tape program selector
- Dolby® Noise Reduction on tape
- Metal/CrO_2 EQ switch
- Cassette door illumination
- Fader and balance controls for 4-speaker systems
- Separate bass & treble
- 10 watts per channel at 1% THD
- Adjustable shafts
- Power antenna lead
- Built-in Stereo Reception Control (SRC) to optimize FM reception

OPERATING INSTRUCTIONS

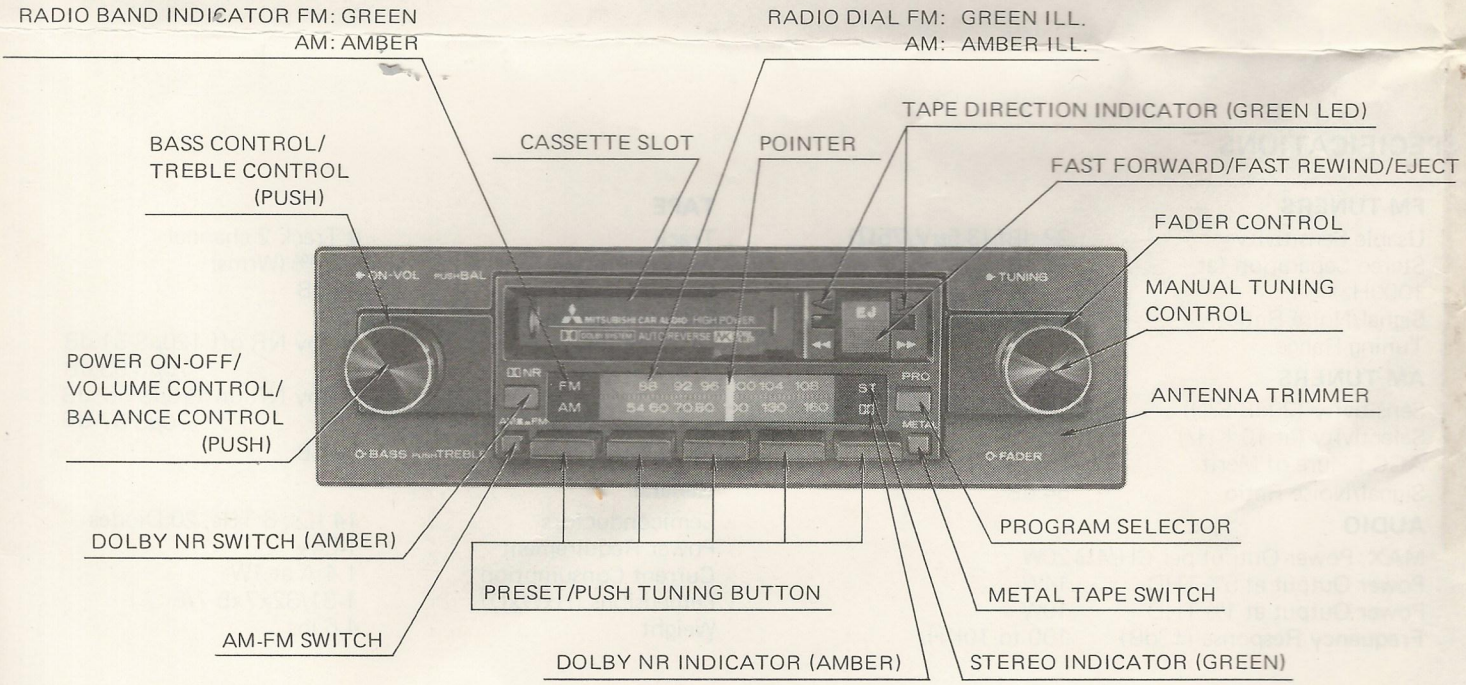

ADJUSTMENTS

AM (IF–RF) Alignment

- Power source voltage DC 14.4V.
- The "AM-FM" switch must be in the "AM" position.
- The Volume control must be at minimum position.
- The Tone control must be at high position.

Step	Circuit	Connections		Frequency	Position of tuning dial	Adjust	Remarks
		Input	Output				
1		–	–	–	High edge	T1	CCW
2	IF	Connect SMG output to VC 1 (TP1) thru, 0.01μF and Chassis	Connect SMG input to R6 (TP2) and Chassis	262.5KHz 50dB	High edge	T2 ~ T5	noise 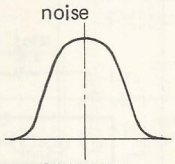 262.5KHz
3				262.5KHz 10 ~ 20dB	High edge	T1	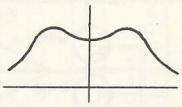
4	RF	Connect SSG output to ANT terminal thru, Dummy Antenna (Fig. 1)	Connect AC volt meter input to Speaker terminal	1630KHz 1000Hz 30% MOD.	High edge	VC3	Tune in
5				1400KHz	1400 KHz	VC1, 2	Maximum reading
6				600KHz	600 KHz	T6	Maximum reading
7				525KHz	Low edge	–	Check of frequency range

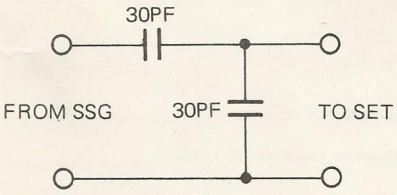

(A) AM DUMMY ANTENNA

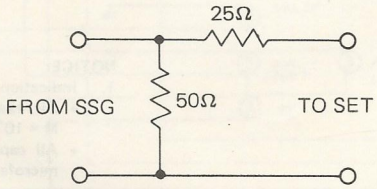

50Ω Close Terminal Type SSG

(B) FM DUMMY ANTENNA

Fig. 1

FM (IF–RF) Alignment

- Power source voltage DC 14.4V.
- The "AM-FM" switch must be in the "FM" position.
- When adjusting an insulating screw driver must be used.
- Adjust VC101, 102 only when the tracking error is over 6dB.

Step	Circuit	Connections		Frequency	Position of tuning dial	Adjust	Remarks
		Input	Output				
1 2	IF	Connect SMG output to TP101 thru, 56 PF and Chassis	Connect SMG input to TP153 and Chassis (Fig. 2)	10.7 MHz	Low edge	T102	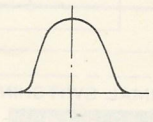 10.7 MHz
3			Connect DC volt meter to TP151 and TP152 (Fig. 3)	No signal	98 MHz	T151	0±40mV
4				98MHz 75KHz Dev.	98MHz	T152	Minimum distortion
5	RF	Connect SSG output to ANT terminal thru, Dummy Antenna (Fig. 1)	Connect AC volt meter input to Speaker terminal	88 MHz	Low edge	VC103	Tune in
6				108 MHz	108 MHz	–	Check of frequency range
7				98 MHz	98 MHz	VC101, 102	Maximum reading

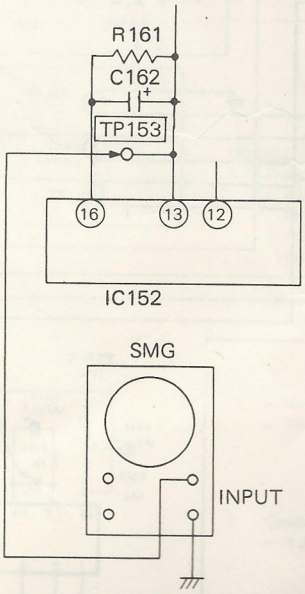

Fig. 2

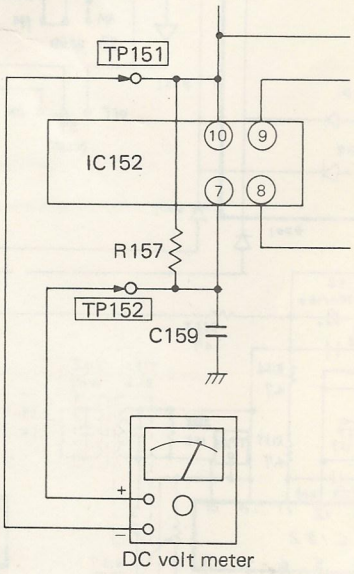

Fig. 3

FM MPX Alignment

Step	Circuit	Connection		Frequency	Point of tuning dial	Adjust	Remarks
		Input	Output				
1	MPX	Connect Counter to TP201 and Chassis	–	–	–	VR202	19±0.1 KHz

SRC Alignment

Step	Circuit	Connection		Frequency	Point of tuning dial	Adjust	Remarks
		Input	Output				
1	SRC	Connect SSG output to Ant terminal thru, Dummy Antenna (Fig. 1)	Connect AC volt meter input to Speaker terminal	–	–	VR203	CCW
2				98MHz 30dB	98MHz	VR201	Best separation
3				98MHz 23dB	98MHz	VR203	Separation 10±2dB

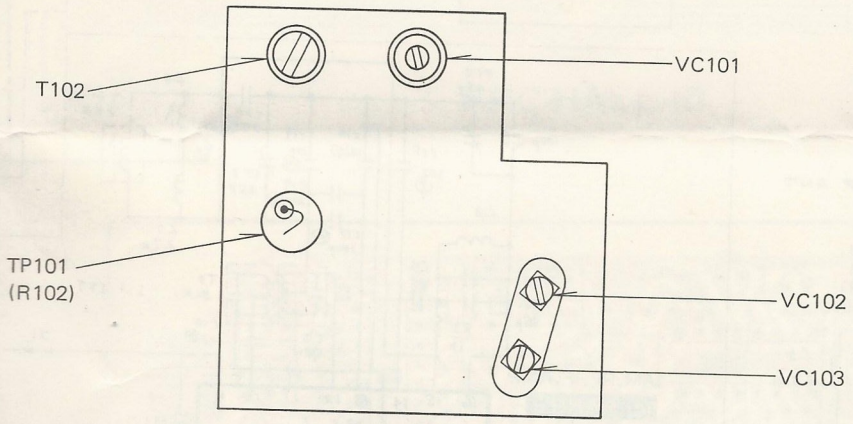

Fig. 4 FM FRONT END

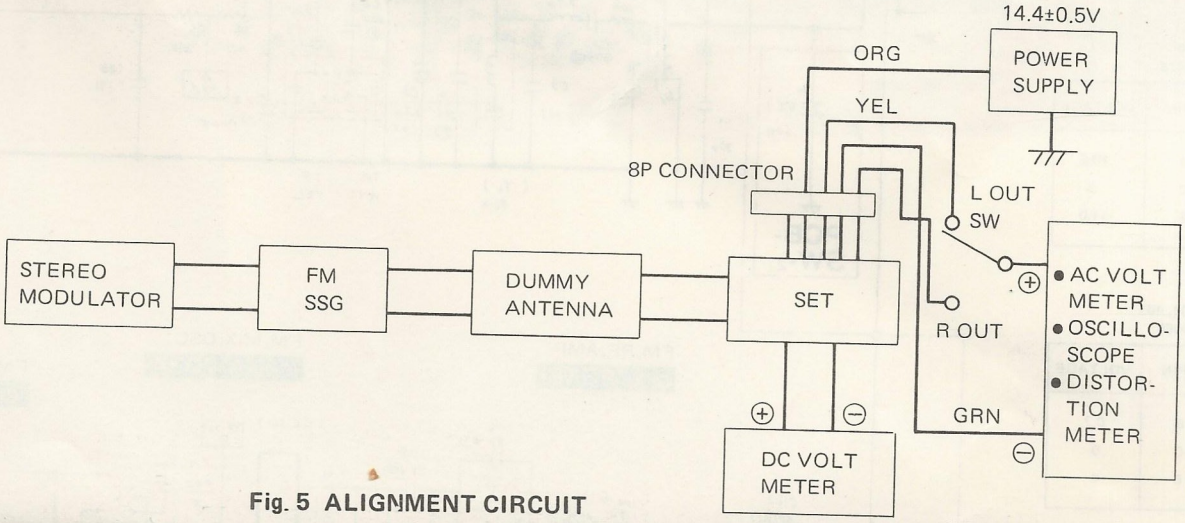

Fig. 5 ALIGNMENT CIRCUIT

VOLTAGE READING

IC701
AN6247

PIN	VOLTAGE
1	1.5
2	–
3	1.7
4	0
5	0
6	3.7
7	13.5

IC151
H8D1266

PIN	VOLTAGE
1	0
2	0
3	11.0
4	1.3
5	0
6	1.9

IC202
SA8084

PIN	VOLTAGE
1	8.0
2	0.8
3	0
4	0
5	0
6	0
7	0

Q701
2SC1210

PIN	VOLTAGE
B	7.5
C	0.01
E	0

Q702
2SA628

PIN	VOLTAGE
B	10.6
C	0
E	11.0

Q301, 401
2SC458

PIN	VOLTAGE
B	0.7
C	0
E	0

Q303, 403
2SC458

PIN	VOLTAGE
B	1.2
C	6.4
E	0.6

Q251
2SC711

PIN	VOLTAGE
B	0.02
C	0
E	0

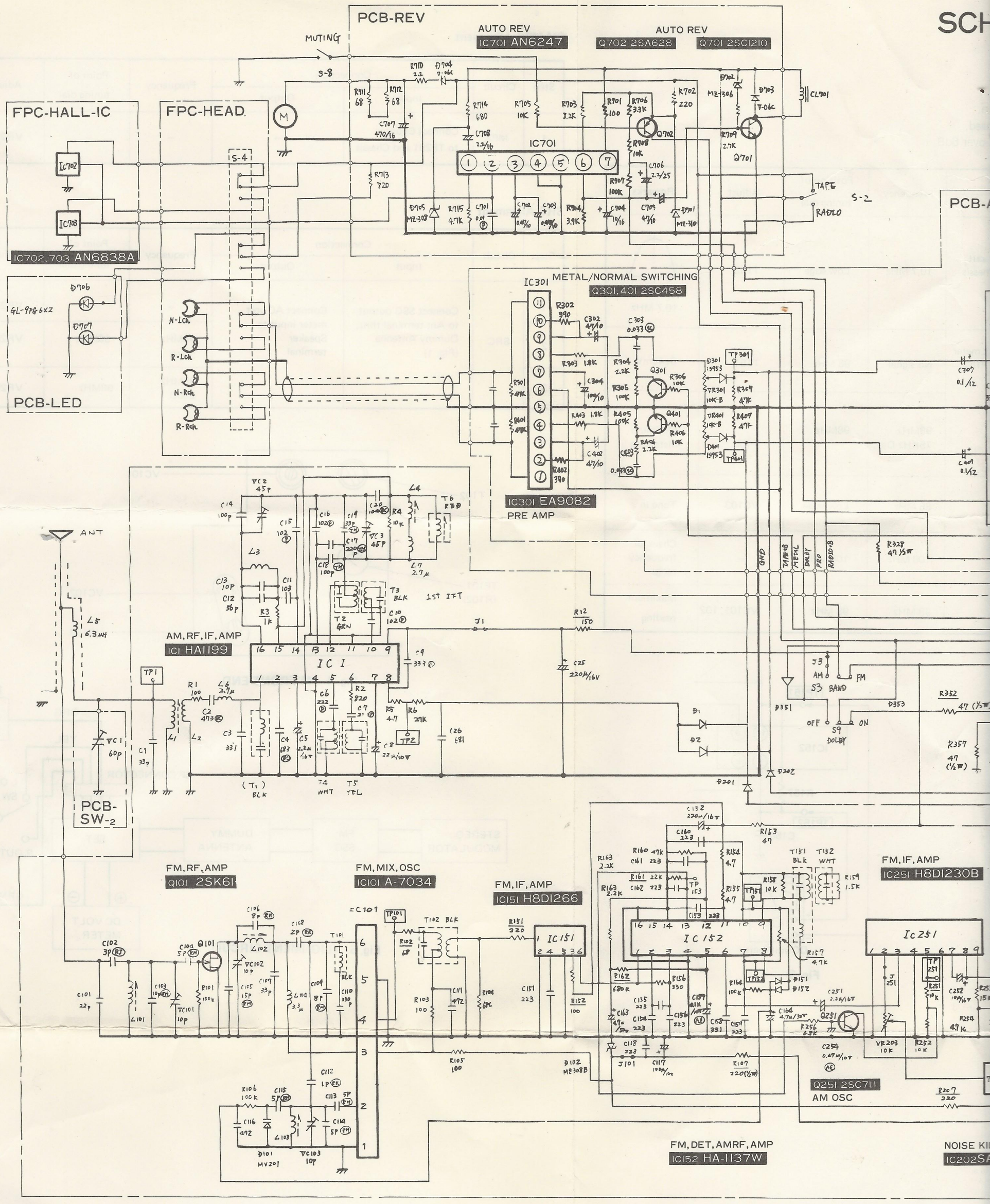

※ DIODE (No. D_1, D_2, D151, D152, D201, D202, D351, D352, D353, D354) are identical shown in IS953/IS2472/IS2473/IS2076/DS442

IC301
EA9082

PIN	VOLTAGE	PIN	VOLTAGE
1	0	8	3.4
2	0.7	9	0.7
3	0.7	10	0.7
4	3.4	11	0
5	0		
6	14.4		
7	8.0		

IC302
NC8500

PIN	VOLTAGE	PIN	VOLTAGE	PIN	VOLTAGE
1	0	8	0.5	15	7.6
2	–	9	0	16	3.0
3	3.0	10	0	17	–
4	7.6	11	0	18	0
5	0	12	7.5		
6	0.3	13	0		
7	7.5	14	0		

IC303, 403
TA7237P

PIN	VOLTAGE	PIN	VOLTAGE
1	13.8	8	9.0
2	7.5	9	1.2
3	–	10	7.6
4	1.2	11	13.8
5	0	12	14.4
6	0		
7	0		

IC1
HA1199

PIN	VOLTAGE	PIN	VOLTAGE	PIN	VOLTAGE
1	1.6	8	1.8	15	11.0
2	0.8	9	12.0	16	10.0
3	0.3	10	2.0		
4	0	11	0		
5	7.6	12	11.4		
6	0.6	13	8.5		
7	1.5	14	1.2		

IC152
HA1137W

PIN	VOLTAGE	PIN	VOL
1	1.9	8	5
2	1.9	9	5
3	1.9	10	5
4	0	11	12
5	0.8	12	4
6	5.4	13	0
7	5.4	14	0

HEMATIC DIAGRAM MODEL : RX-791EM

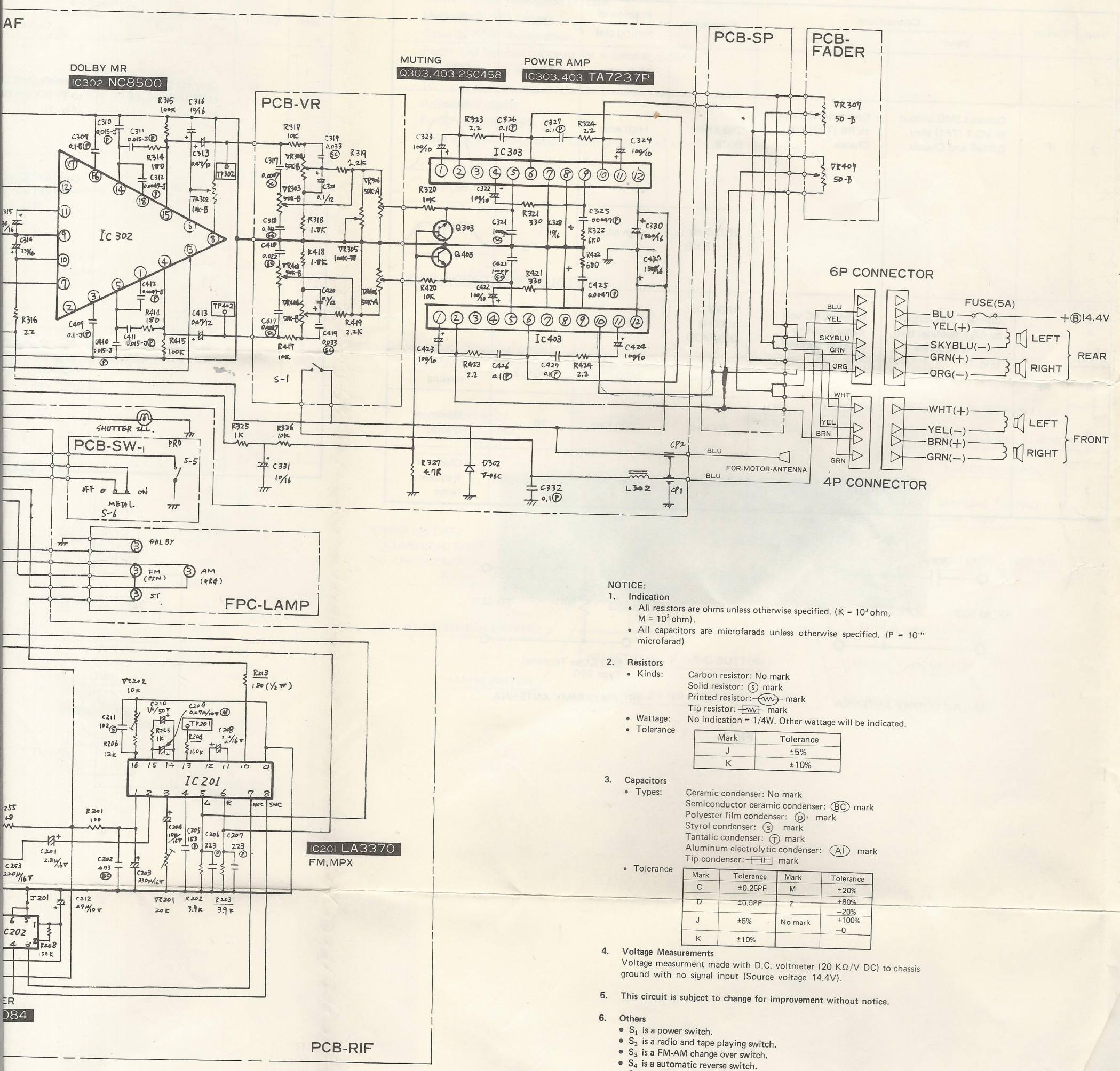

NOTICE:

1. **Indication**
   - All resistors are ohms unless otherwise specified. (K = 10^3 ohm, M = 10^3 ohm).
   - All capacitors are microfarads unless otherwise specified. (P = 10^{-6} microfarad)

2. **Resistors**
   - Kinds: Carbon resistor: No mark
     Solid resistor: (S) mark
     Printed resistor: mark
     Tip resistor: mark
   - Wattage: No indication = 1/4W. Other wattage will be indicated.
   - Tolerance

Mark	Tolerance
J	±5%
K	±10%

3. **Capacitors**
   - Types: Ceramic condenser: No mark
     Semiconductor ceramic condenser: (BC) mark
     Polyester film condenser: (P) mark
     Styrol condenser: (S) mark
     Tantalic condenser: (T) mark
     Aluminum electrolytic condenser: (Al) mark
     Tip condenser: mark
   - Tolerance

Mark	Tolerance	Mark	Tolerance
C	±0.25PF	M	±20%
D	±0.5PF	Z	+80% −20%
J	±5%	No mark	+100% −0
K	±10%		

4. **Voltage Measurements**
   Voltage measurment made with D.C. voltmeter (20 KΩ/V DC) to chassis ground with no signal input (Source voltage 14.4V).

5. **This circuit is subject to change for improvement without notice.**

6. **Others**
   - S_1 is a power switch.
   - S_2 is a radio and tape playing switch.
   - S_3 is a FM-AM change over switch.
   - S_4 is a automatic reverse switch.
   - S_5 is a tape program selector switch.
   - S_6 is a metal switch.
   - S_8 is a muting switch.
   - S_9 is a dollby switch.

PIN	VOLTAGE
15	4.8
16	0

IC251
H8D1230B

PIN	VOLTAGE	PIN	VOLTAGE
1	0	8	13.0
2	3.0	9	0
3	2.0		
4	0		
5	0		
6	0		
7	13.0		

IC201
LA3370

PIN	VOLTAGE	PIN	VOLTAGE	PIN	VOLTAGE
1	12.0	8	0	15	2.1
2	2.3	9	0	16	2.4
3	2.9	10	14.4		
4	2.5	11	2.1		
5	4.4	12	2.1		
6	4.4	13	1.5		
7	0	14	2.1		

CIRCUIT BOARD (Printed Side)
DEL : RX-791EM

H I J K L M N O P

PCB-REV

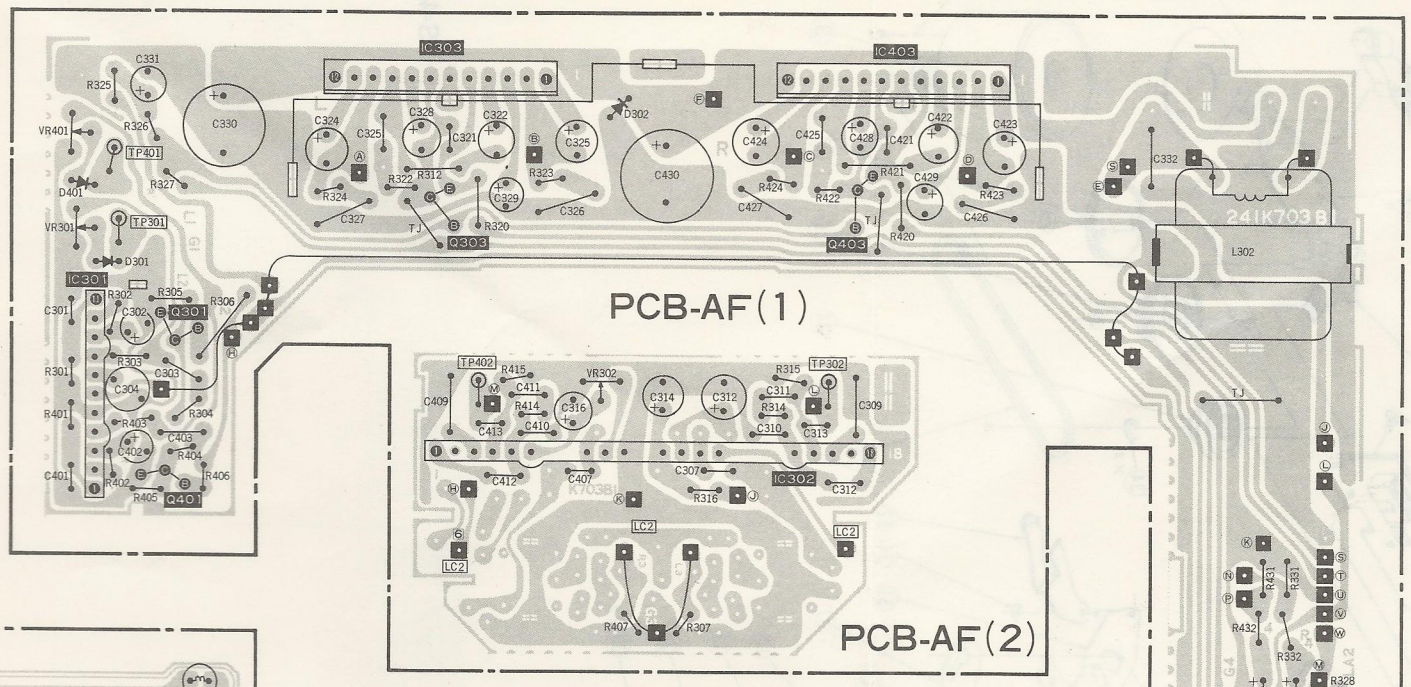

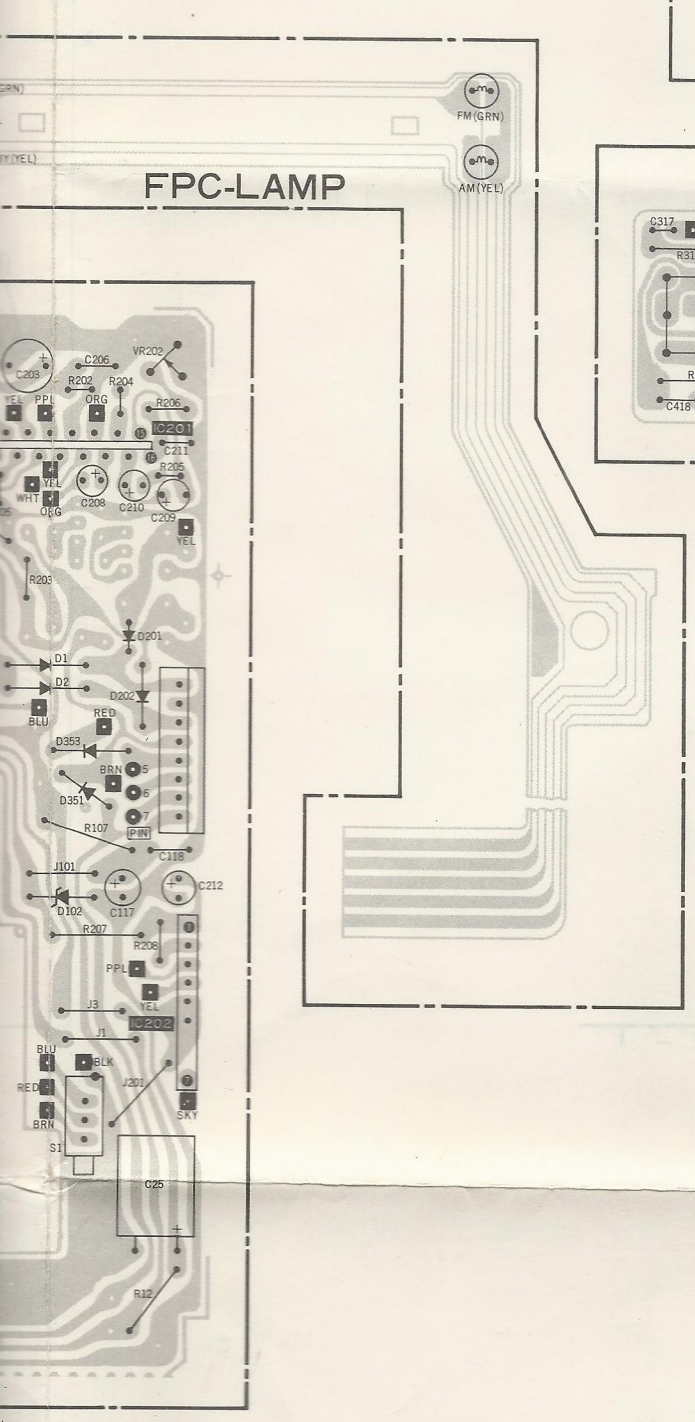

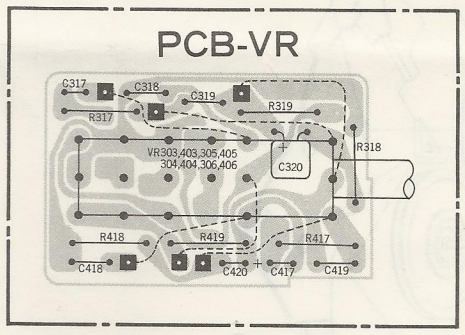

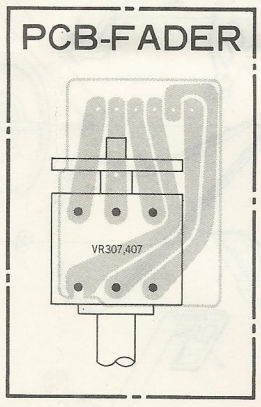

PCB-AF

		Ref. No.	Index
RESISTOR		C329	K-2
		C330	J-1
R301	I-3	C331	I-1
R302	I-2	C332	O-1
R304	J-3	C333	O-4
R305	J-2	C401	I-3
R306	J-2	C402	I-3
R307	L-4	C403	J-3
R312	K-1	C407	L-3
R314	M-3	C409	K-3
R315	M-3	C410	K-3
R316	L-3	C411	K-3
R320	K-2	C412	K-3
R322	K-2	C413	K-3
R323	L-2	C421	M-1
R324	J-2	C422	N-1
R325	I-1	C423	N-1
R326	I-1	C424	M-1
R327	J-2	C425	M-1
R328	D-5	C426	N-2
R331	O-4	C427	M-2
R332	O-4	C428	M-1
R401	I-3	C429	N-2
R402	I-3	C430	L-2
R403	I-3	C433	O-4
R404	J-3	DIODE	
R405	I-3		
R406	J-3	D301	I-2
R407	L-4	D302	L-1
R414	K-3	D401	I-2
R415	K-3	TRANSISTOR	
R420	M-2		
R421	M-1	Q301	J-2
R422	M-2	Q303	K-2
R423	N-2	Q401	J-3
R424	M-1	Q403	M-2
R431	O-4	IC	
R432	O-4		
VR		IC301	I-2
		IC302	M-3
VR301	I-2	IC303	K-1
VR302	L-3	COIL	
VR401	I-1		
CONDENSER		L302	O-2
C301	I-2		
C302	I-2		
C303	J-3		
C304	I-3		
C307	M-3		
C309	M-3		
C310	M-3		
C311	M-3		
C312	M-3		
C313	M-3		
C314	L-3		
C316	L-3		
C321	K-1		
C324	J-1		
C325	K-1		
C326	L-2		
C327	J-2		
C328	K-1		

PCB-RIF

Ref. No.	Index	Ref. No.	Index	Ref. No.	Index	Ref. No.	Index
RESISTOR		V. R.		C111	D-8	D151	E-7
				C112	E-9	D152	E-6
R1	B-7	VR2	C-7	C113	E-9	D201	H-7
R2	B-6	VR3	C-6	C114	E-9	D202	H-7
R3	C-7	VR101	G-9	C115	E-9	D351	H-8
R5	F-7	VR102	F-9	C116	E-8	D353	H-8
R6	F-6	VR103	E-9	C117	H-8	TRANSISTOR	
R12	H-11	VR201	G-6	C118	H-8		
R101	D-9	VR202	H-6	C122	D-6	Q101	D-9
R102	D-8	VR203	F-6	C151	D-6	Q251	F-7
R103	D-8	CONDENSER		C152	F-6	I C	
R104	D-9			C153	E-7		
R105	D-8			C154	D-6	IC1	C-6
R106	E-8	C1	B-7	C156	D-6	IC101	E-8
R107	H-8	C2	B-7	C157	D-6	IC151	D-6
R151	D-7	C3	B-7	C158	E-6	IC152	D-6
R152	D-7	C4	B-6	C159	E-6	IC201	H-6
R153	G-6	C5	B-6	C160	E-6	IC202	H-9
R154	F-7	C6	B-6	C161	D-6	IC251	F-6
R155	E-7	C7	B-6	C162	D-6	TRANSFORMER	
R157	E-6	C8	B-6	C163	D-7		
R158	E-6	C9	B-6	C164	E-7	T2	C-6
R159	F-6	C10	D-6	C202	G-6	T3	C-6
R160	E-6	C11	C-7	C203	G-6	T4	B-6
R162	E-6	C12	C-7	C204	G-6	T5	B-6
R163	D-6	C13	C-7	C205	G-6	T6	C-6
R164	E-6	C14	C-6	C206	H-6	T101	D-8
R201	G-6	C15	C-6	C207	G-7	T102	D-8
R202	H-6	C16	C-6	C208	H-6	T151	E-6
R203	G-7	C17	D-6	C209	H-6	T152	F-6
R204	H-6	C18	D-6	C210	H-6	COIL	
R205	H-6	C19	D-6	C211	H-6		
R206	H-6	C25	H-10	C212	H-8	L6	B-7
R207	H-9	C26	F-6	C252	F-6	L7	D-6
R208	H-9	C101	D-9	C253	F-6	L104	E-9
R213	E-7	C102	D-6	C254	E-7	SW	
R251	F-6	C103	D-9	DIODE			
R252	F-7	C104	D-9			S1	H-10
R253	G-6	C105	D-9	D1	G-7	S2	G-11
R254	G-6	C106	E-9	D2	G-7		
R255	G-6	C107	E-9	D101	E-8		
R351	E-7	C110	D-8	D102	H-8		
R352	G-7						

PCB-REV

Ref. No.	Index
RESISTOR	
R701	F-1
R702	F-1
R703	F-1
R704	F-2
R705	F-1
R706	F-1
R707	F-1
R709	G-1
R710	F-1
R711	F-1
R712	F-1
R713	E-1
CONDENSER	
C701	G-1
C702	G-1
C703	G-1
C704	G-2
C705	F-1
C706	F-1
C707	F-1
DIODE	
D701	F-1
D702	F-1
D703	G-1
D704	F-1
TRANSISTOR	
Q701	G-1
Q702	F-1
I C	
IC701	G-1

PCB-VR

Ref. No.	Index
RESISTOR	
R317	K-5
R318	L-5
R319	L-5
R417	L-6
R418	K-6
R419	K-6
V R	
VR303~306 403~406	L-5
CONDENSER	
C317	K-5
C318	K-5
C319	K-5
C320	L-5
C417	L-6
C418	K-6
C419	L-6
C420	L-6

PRINTED CIRCUIT BOARD (
MODEL : RX-791EM

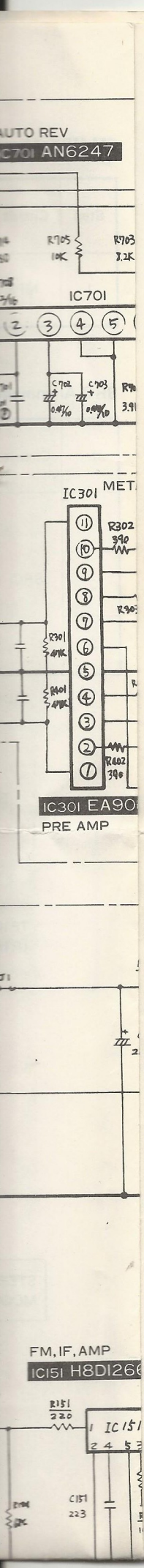

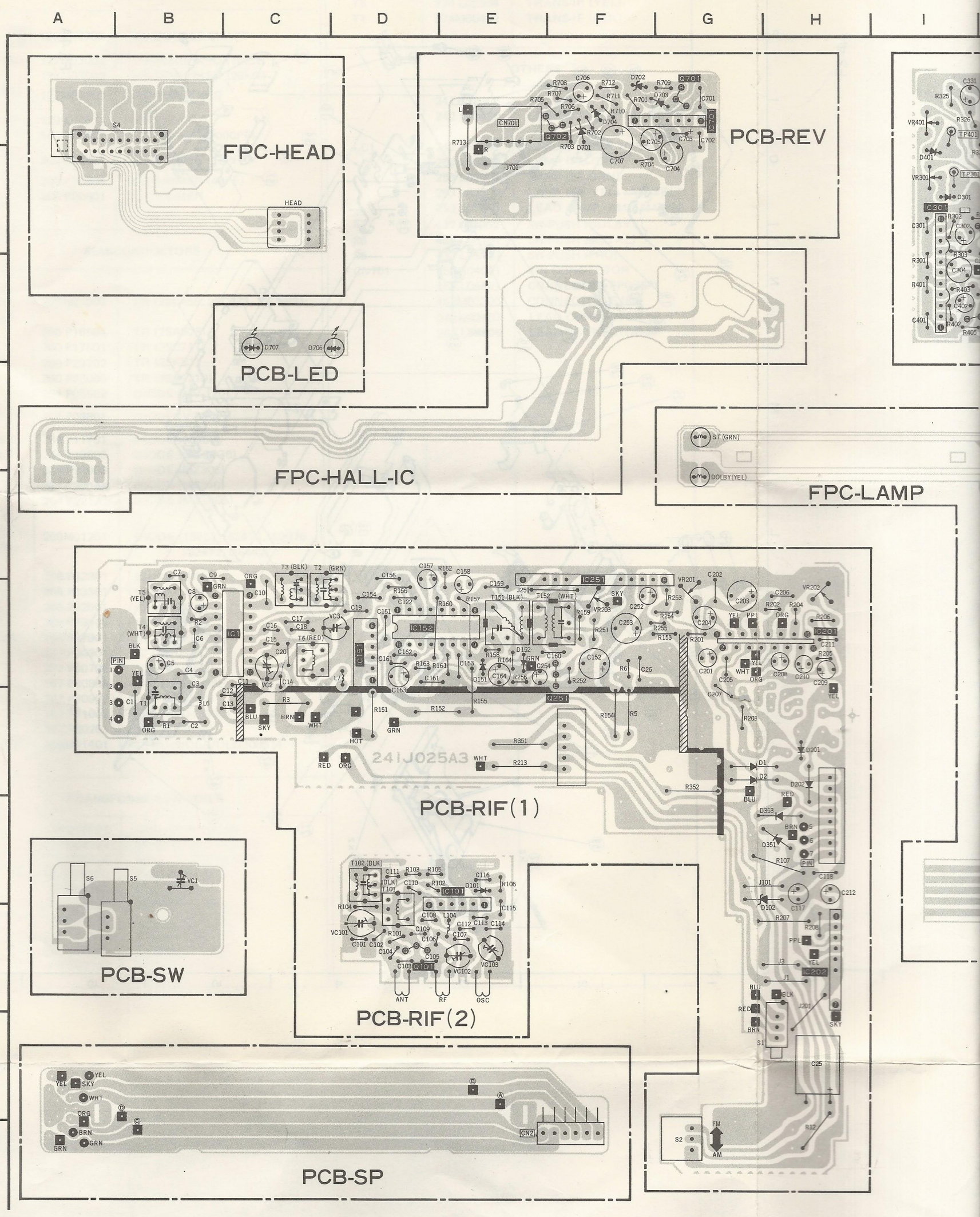

EXPLODED VIEW

Tape Deck

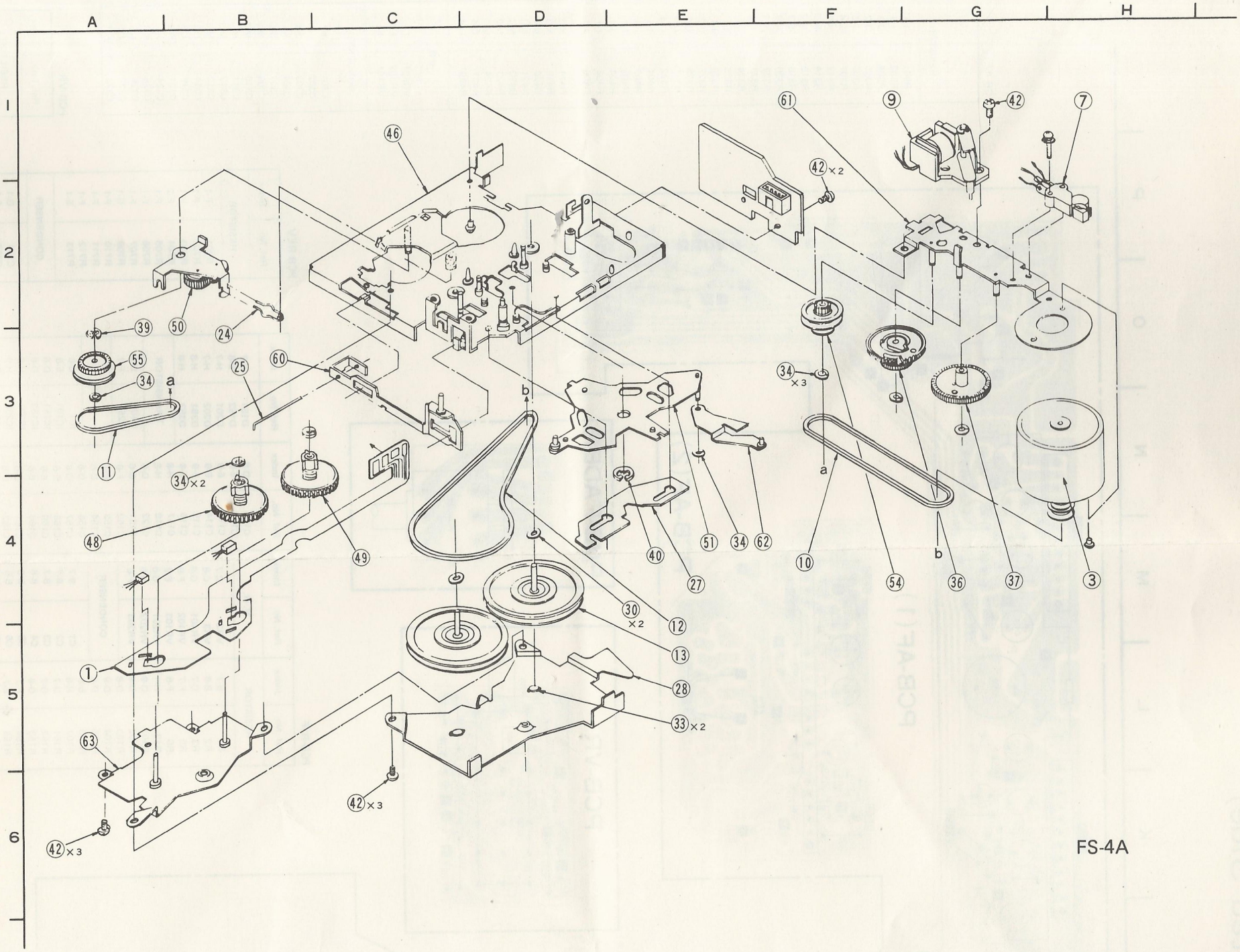

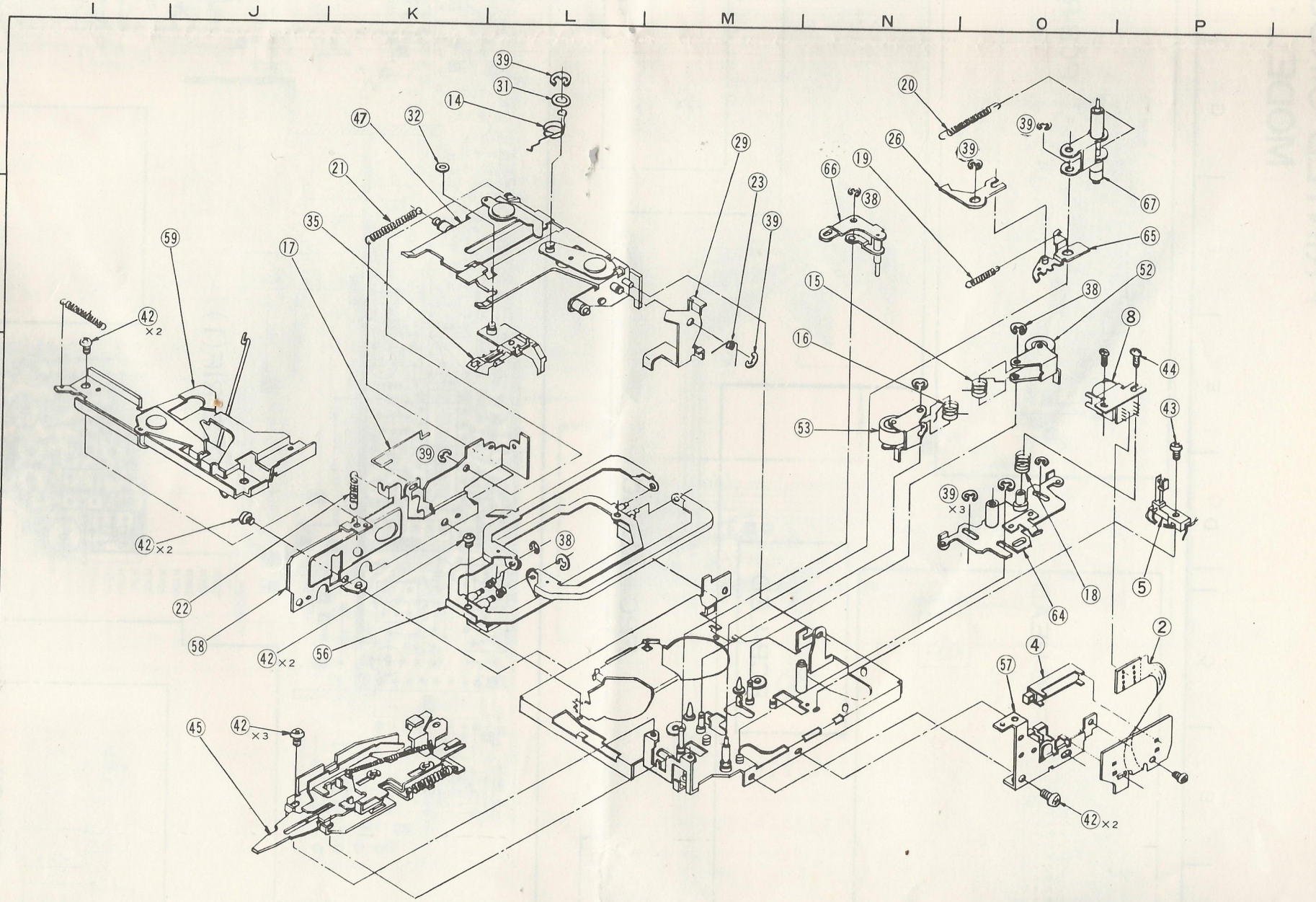
I
J
K
L
M
N
O
P
1
2
3
4
5
6
39
31
14
47
32
21
35
17
59
42 ×2
42 ×2
22
58
42 ×2
56
38
39
29
23
39
66
38
20
39
26
39
19
67
65
15
52
38
8
16
44
53
43
39 ×3
18
64
5
2
4
57
42 ×2
45
42 ×3

FS-4A

MECHANICAL PARTS LIST

Tape Deck

Ref. No.	Part No.	Description	Index
1	241 K58101	FPC-HALL-IC	A-5
2	241 L48901	FPC-HEAD	P-4
3	288 L01201	MOTOR	H-4
4	431 L04601	SWITCH-SLIDE	O-4
5	435 L01701	SWITCH-LEAF	P-4
6			
7	439 L00101	SWITCH-SQ	H-1
8	460 P03101	MAGNETIC HEAD	P-2
9	479 L01301	MAGNETIC CLUTCH	F-1
10	521M02601	BELT-SI	F-4
11	521M02901	BELT-A	A-4
12	521M03001	BELT-B	E-4
13	524 L00902	FLYWHEEL	E-5
14	570M34203	SPRING-IE	K-1
15	570M34303	SPRING-PINCH	M-2
16	570M34304	"	M-3
17	570M34601	WIRE-STOPPER	J-2
18	570M34701	SPRING-HEAD	O-4
19	570M35101	SPRING-FF-RE	N-1
20	570M35201	SPRING-SL-B	N-1
21	570M35504	SPRING-CH	J-1
22	570M35601	SPRING-SCH	I-4
23	570M36601	SPRING-UP	M-1
24	570M38401	SPRING-AR	B-3
25	570M38501	WIRE-FF-RE	B-3
26	590 L87001	LINK RELEASE	N-1
27	590 L87101	CAM PLATE-FF	E-4
28	590 L87201	BOTTOM-FW	E-5
29	591M79101	UP-LEVER	M-2
30	640M00201	WASHER-P 0.25t x 2φ	
31	640M03003	" 0.5t x 3.1φ	
32	640M03004	" 0.5t x 2.6φ	
33	640M04201	BOTTOM CAP	F-5
34	640M04301	CUT-WASHER-P 0.25t x 1.5φ	
35	641 L02902	SLIDER PAC	J-2
36	641 L04102	CAM GEAR	G-4
37	641M19801	GEAR CLANK	G-4
38	685 C00203	RETAINING RING E1.5	
39	685 C00205	" E2.5	
40	685 C00207	" E4	
41	669 L02703	SCREW-BINDING M2 x 5	
42	669 L02704	" M2.6 x 3	
43	669 L02706	" M2.6 x 6	
44	669M07001	SCREW-LING LOCK M2x5.3	P-3
45	891 K02002	UNIT LEVER CONTROL	J-5
46	891 K02101	MAIN BASE	C-1
47	891 K02201	HOLDER CASSETTE	K-1
48	891 L06003	UNIT REEL REST	A-4
49	891 L06004	"	C-4
50	891 L06103	LEVER IDLER	A-3
51	891 L06502	LEVER CRANK	E-4
52	891 L07003	PINCH ROLLER	P-2
53	891 L07004	"	N-3
54	891 L08801	PULLEY GEAR	F-4
55	891 L08901	GEAR PULLEY	A-3
56	891 L10301	UNIT BRIDGE	J-5
57	891 L10401	UNIT HOLDER-SW	O-4
58	891 L10501	UNIT SIDE PLATE	J-5
59	891 L10601	UNIT PLATE SUB	J-2
60	891 L10701	FF SLIDE	B-3
61	891 L10801	PLATE CAM	F-1
62	891 L10901	LINK CRANK	E-4
63	891 L11001	BOTTOM REEL	A-5
64	891 L11101	BASE HEAD	O-4
65	891 L11201	LEVER RELEASE	P-2
66	891 L11301	LEVER RETAINER	N-1
67	891 L11401	LEVER BA-H	P-1

Cabinet

FS-4A

Ref. No.	Part No.	Description	Index
1	122 L08702	VR-DOUBLE SHAFT	B-3
2	129 L12601	VR-FADER	E-7
3			
4	242 L38400	LEAD CONNECTOR-6P	E-6
5	242 L14802	LEAD-6CM	E-2
6	242 L14904	LEAD-4CM	E-2
7	242M14703	LEAD-1P	E-2
8	295 K07601	TUNER	C-7
9	432 L03902	SW-PUSH	C-5
10	432 L05101	SW-PUSH	D-5
11	432 L05102	SW-PUSH	D-6
12	449 L03602	SOCKET-ANT	D-6
13	531M07203	SHAFT SHUTTER	A-3
14	560 J01801	CHASSIS	D-7
15	570M36301	SPRING SHUTTER	B-3
16	590 D95401	CABLE CLAMPER	E-6
17	590 K26301	CHASSIS DECK	D-5
18	590 K26601	UPPER	C-1
19	590 K26701	COVER	E-8
20	590 L86301	FRONT COVER	B-4
21	590 L86401	HEAT SINK-B	D-1
22	590 L86501	HEAT SINK-A	D-3
23	591M84401	PLATE-P	C-3
24	591M76501	LEVER-SW	B-5
25	591M77401	LEVER-SW-B	C-6
26	641 L03302	JOINT-VR	E-7
27	641M18201	HOLDER LAMP	C-2
28	641M20401	SPACER-LED	C-4
29	702 L06502	FACE PLATE	A-4
30	704 L12101	KNOB-A	A-5
			A-6
31	704 L12201	KNOB-B	A-4
			B-5
32	704M40201	KNOB-EJ	A-5
33	704M42001	BUTTON-B	C-6
34	704M42101	BUTTON-C	B-6
35	704M42201	BUTTON-A	C-6
36	707 L07307	DIAL	B-6
37	713M05301	ORNAMENT	B-4
			B-5
38	761 L01203	COVER LAMP	B-6
39	761M05602	JOINT-J	E-7
40	761M05801	GUIDE-SW	B-6
41	761M05901	HOLDER-PCB	C-7
42	761M06301	SHUTTER	B-4
43	963 L18601	ASSY-PANEL	B-4

EXPLODED VIEW

Cabinet

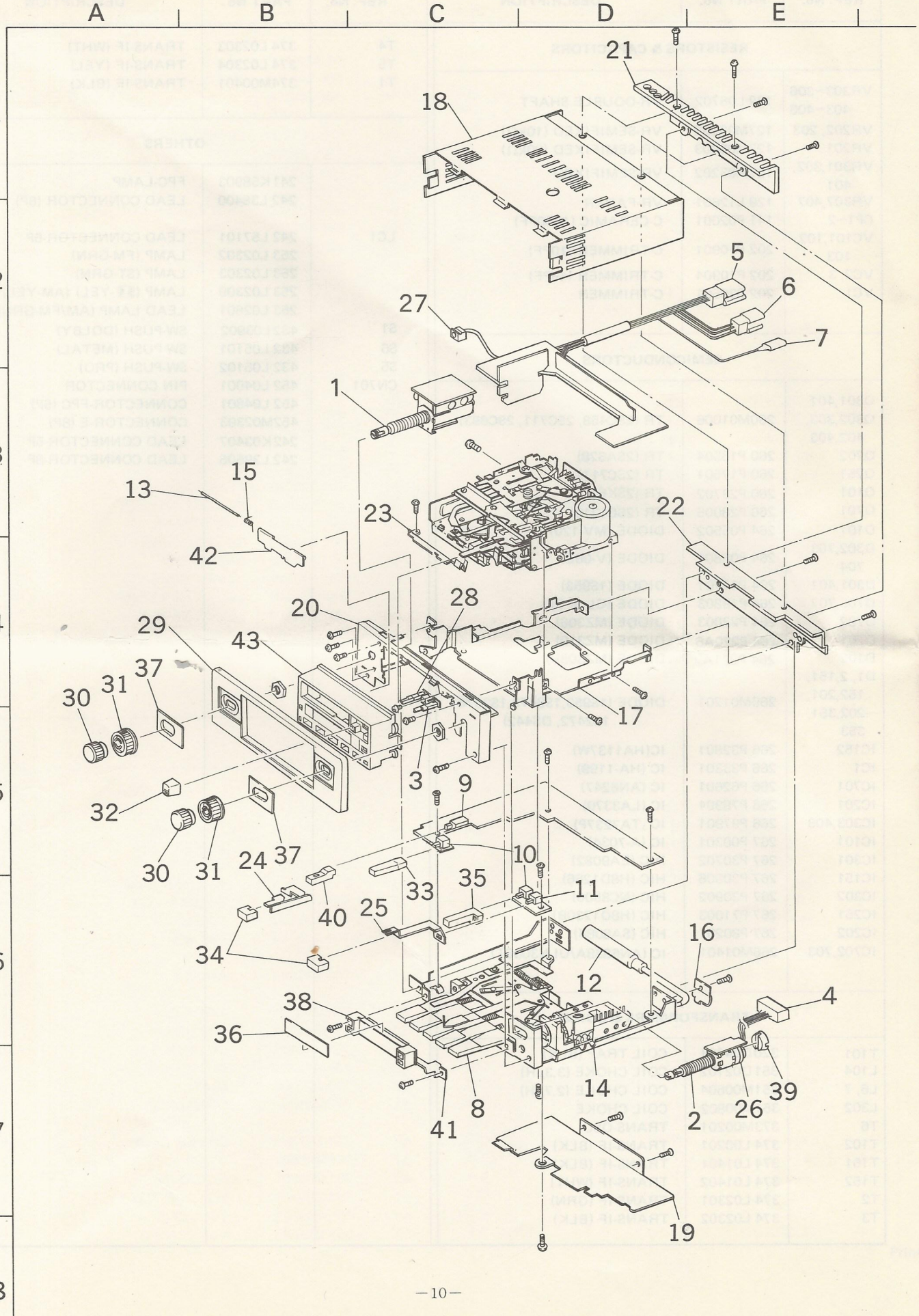

REF. No.	PART No.	DESCRIPTION
RESISTORS & CAPACITORS		
VR303~306 403~406	122 L08702	VR-DOUBLE SHAFT
VR202, 203	127M03002	VR-SEMIFIXED (10kΩ)
VR201	127M03003	VR-SEMIFIXED (20kΩ)
VR301,302, 401	127M03202	VR-SEMIFIXED
VR307,407	129 L12601	VR-FADER
CP1~2	141 P02001	C-CERAMIC (1000PF)
VC101,102, 103	202 P10901	C-TRIMMER (10PF)
VC2, 3	202 P10904	C-TRIMMER (45PF)
VC1	202 P20601	C-TRIMMER
SEMICONDUCTORS		
Q301,401 Q302,303, 402,403	260M01006	TR (2SC458, 2SC711, 2SC693)
Q702	260 P16504	TR (2SA628)
Q251	260 P17501	TR (2SC711)
Q101	260 P23702	TR (2SK61)
Q701	260 P28005	TR (2SC1210)
D101	264 P05502	DIODE (MV-120)
D302,703 704	264 P08801	DIODE (V-06C)
D301,401	264 P11701	DIODE (1S953)
D706,707	264 P19803	DIODE (GL-9PG6)
D702	264 P22003	DIODE (MZ306)
D701	264 P220A6	DIODE (MZ310)
D102	264 P221A2	DIODE (MZ308B)
D1, 2,151, 152,201, 202,351, 353	269M01201	DIODE (1S953,1S2473,1S2076 1S2472, DS442)
IC152	266 P32801	IC(HA1137W)
IC1	266 P33301	IC (HA-1199)
IC701	266 P62601	IC (AN6247)
IC201	266 P78901	IC (LA3370)
IC303,403	266 P97901	IC (TA7237P)
IC101	267 P00301	IC (A-7034)
IC301	267 P30702	HIC (EA9082)
IC151	267 P30806	HIC (H8D1266)
IC302	267 P30902	HIC (NC8500)
IC251	267 P71003	HIC (H8D1230B)
IC202	267 P80201	HIC (SA8084)
IC702,703	266M01401	IC (AN6838A/ULN3006T)
TRANSFORMERS & COILS		
T101	320D04601	COIL TRAP (BLK)
L104	351 D02102	COIL CHOKE (3.3μH)
L6, 7	351M00604	COIL CHOKE (2.7μH)
L302	351M00802	COIL CHOKE
T6	373M00201	TRANS-OSC
T102	374 L00201	TRANS-IF (BLK)
T151	374 L01401	TRANS-IF (BLK)
T152	374 L01402	TRANS-IF (WHT)
T2	374 L02301	TRANS-IF (GRN)
T3	374 L02302	TRANS-IF (BLK)
T4	374 L02303	TRANS-IF (WHT)
T5	374 L02304	TRANS-IF (YEL)
T1	374M00401	TRANS-IF (BLK)
OTHERS		
	241K58903	FPC-LAMP
	242 L38400	LEAD CONNECTOR (6P)
LC1	242 L57101	LEAD CONNECTOR-5P
	253 L02302	LAMP (FM-GRN)
	253 L02303	LAMP (ST-GRN)
	253 L02309	LAMP (DD-YEL) (AM-YEL)
	253 L02601	LEAD LAMP (AM/FM-GRN)
S1	432 L03902	SW-PUSH (DOLBY)
S6	432 L05101	SW-PUSH (METAL)
S5	432 L05102	SW-PUSH (PRO)
CN701	452 L04001	PIN CONNECTOR
	452 L04801	CONNECTOR-FPC (5P)
	452M02303	CONNECTOR-E (8P)
	242K03407	LEAD CONNECTOR-5P
	242 L39506	LEAD CONNECTOR-8P