Clarion

SERVICE MANUAL

Closer Relations through "CLARION SERVICE MANUAL"

MODEL RU-344A RE-344B

Fabricant: CLARION CO., LTD./Exportations: CLARION SHOJI CO., LTD.
3, Kojimachi 5-chome, Chiyoda-ku, Tokyo, 102 Japan Tel.: (265) 2931 Telex: J22908, J22152 CLARISHO
Succursales outre-mer:
CLARION SHOJI (EUROPA) G.M.B.H. 2000 Hamburg 76, Schöne Aussicht 35, West Germany. Tel.: 220-7667 Telex: 41214969
CLARION SHOJI CO., LTD. (U.S.A.) 5500 Rosecrans Ave., Lawndale, Calif., 90260 U.S.A. Tel.: 213-973-1100 Telex: 66-4447
CLARION CORPORATION OF AMERICA 5500 Rosecrans Ave., Lawndale, Calif., 90260 U.S.A. Tel.: 213-973-1100 Telex: 66-4447
CLARION CORPORATION OF AMERICA, EASTERN DIVISION 421 North Midland Ave., Saddle Brook, N.J. 07662 U.S.A. Tel.: 201-791-1200 Telex: 13805
CLARION (MALAYSIA) SDN. BHD. 9 1/2 m.s. Bayan Lepas, Penang, Malaysia Tel.: 897-206, 897-334 Telex: PG 255 (Penang)
CLARION DO BRASIL INDUSTRIA E COMERCIO LTDA. Caixa Postal 5033, Sao Paulo, Brasil Tel.: 32-5161 Telex: 3821123
CLARION (HONG KONG) CO., LTD. 225 Ping Chau Gallery, Ocean Terminal, Kowloon, H.K. Tel.: 3-675785 Telex: HK4922

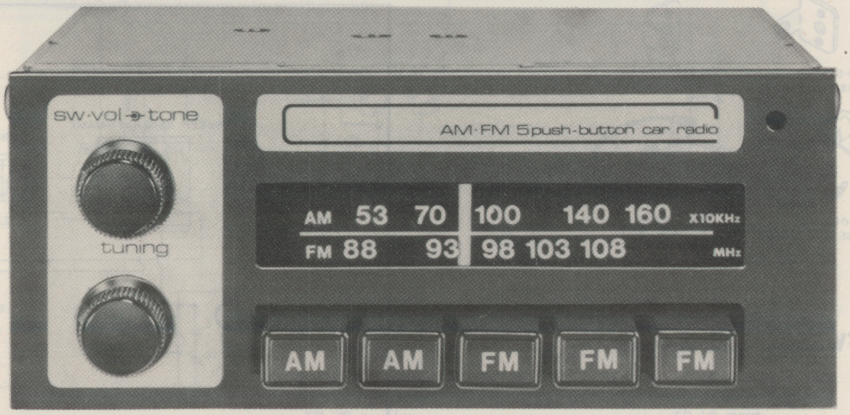

*SPECIFICATIONS

RU-344A

Circuit system:	Superheterodyne	
Tuning system:	Manual μ-tuning 5-push button system	
Receive range:	AM	530~1605KHz
	FM	88~108MHz
Intermediate frequency:	AM	262.5KHz
	FM	10.7MHz
Maximum sensitivity:	AM	Less than 20dB
	FM	Less than 15dB
Quieting sensitivity:	AM	Less than 30dB
	FM	Less than 20dB
Image rejection ratio:	AM	More than 50dB
	FM	More than 40dB
IF rejection ratio:	AM	More than 50dB
	FM	More than 55dB
AFC:	FM	300~600KHz
Limiter sensitivity:	FM	Less than 30dB
½ IF rejection ratio:	FM	More than 70dB
AGC F.O.M:	AM	More than 40dB
Selectivity:	AM	More than 20dB
Electrical fidelity:	AM 100Hz	H +1±3dB
		L +5±3dB
	4000Hz	H −15±5dB
		L −27±5dB
	FM 100Hz	H +2±3dB
		L +6±3dB
	7000Hz	H −15±5dB
		L −30±5dB

Load impedance:	4Ω
Power output:	More than 4W (for 10% distortion)
	More than 6W (for max. volume)
Power supply voltage:	DC. 13.2V Negative ground
Dimensions:	Width 140m/m
	Height 58m/m
	Depth 135m/m
Weight:	1.13kg

Semiconductors:

FM	RF amplifier	2SC1342	× 1
	Frequency mixer	2SC461B	× 1
	Local oscillator	2SC461B	× 1
	AFC	001-0130-00 (1S2790WT)	× 1
	IF amplifier	2SC460B	× 4
	Detector	001-0020-00 (1N60)	× 2
AM	RF amplifier	2SC460B	× 1
	Frequency converter	2SC454B	× 1
	IF amplifier	2SC460B	× 1
	Detector	001-0095-00 (1S2076)	× 1
	AGC	001-0010-00 (1N34A)	× 1
	Audio output amplifier	051-0036-01,02 (HA-1322)	×1
	Voltage regulator	001-0099-01 (HZ-7B)	× 1

Printed in Japan 298-1768-00

Clarion

SERVICE MANUAL

Closer Relations through "CLARION SERVICE MANUAL"

MODEL RU-344A RE-344B

Fabricant: **CLARION CO., LTD.**/Exportations: **CLARION SHOJI CO., LTD.**

3, Kojimachi 5-chome, Chiyoda-ku, Tokyo, 102 Japan Tel.: (265) 2931 Telex: J22908, J22152 CLARISHO

Succursales outre-mer:

CLARION SHOJI (EUROPA) G.M.B.H. 2000 Hamburg 76, Schöne Aussicht 35, West Germany. Tel.: 220-7667 Telex: 41214969

CLARION SHOJI CO., LTD. (U.S.A.) 5500 Rosecrans Ave., Lawndale, Calif., 90260 U.S.A. Tel.: 213-973-1100 Telex: 66-4447

CLARION CORPORATION OF AMERICA 5500 Rosecrans Ave., Lawndale, Calif., 90260 U.S.A. Tel.: 213-973-1100 Telex: 66-4447

CLARION CORPORATION OF AMERICA, EASTERN DIVISION 421 North Midland Ave., Saddle Brook, N.J. 07662 U.S.A. Tel.: 201-791-1200 Telex: 13805

CLARION (MALAYSIA) SDN. BHD. 9 1/2 m.s. Bayan Lepas, Penang, Malaysia Tel.: 897-206, 897-334 Telex: PG 255 (Penang)

CLARION DO BRASIL INDUSTRIA E COMERCIO LTDA. Caixa Postal 5033, Sao Paulo, Brasil Tel.: 32-5161 Telex: 3821123

CLARION (HONG KONG) CO., LTD. 225 Ping Chau Gallery, Ocean Terminal, Kowloon, H.K. Tel.: 3-675785 Telex: HK4922

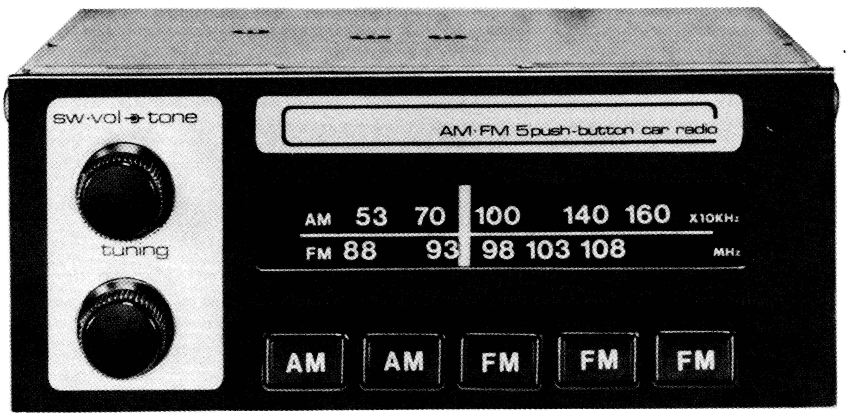

*SPECIFICATIONS

RU-344A

Circuit system:	Superheterodyne		
Tuning system:	Manual μ-tuning 5-push button system		
Receive range:	AM	530～1605KHz	
	FM	88～108MHz	
Intermediate frequency:	AM	262.5KHz	
	FM	10.7MHz	
Maximum sensitivity:	AM	Less than 20dB	
	FM	Less than 15dB	
Quieting sensitivity:	AM	Less than 30dB	
	FM	Less than 20dB	
Image rejection ratio:	AM	More than 50dB	
	FM	More than 40dB	
IF rejection ratio:	AM	More than 50dB	
	FM	More than 55dB	
AFC:	FM	300～600KHz	
Limiter sensitivity:	FM	Less than 30dB	
½ IF rejection ratio:	FM	More than 70dB	
AGC F.O.M:	AM	More than 40dB	
Selectivity:	AM	More than 20dB	
Electrical fidelity:	AM	100Hz	H +1±3dB
			L +5±3dB
		4000Hz	H −15±5dB
			L −27±5dB
	FM	100Hz	H +2±3dB
			L +6±3dB
		7000Hz	H −15±5dB
			L −30±5dB

Load impedance:	4Ω
Power output:	More than 4W (for 10% distortion)
	More than 6W (for max. volume)
Power supply voltage:	DC. 13.2V Negative ground
Dimensions:	Width 140m/m
	Height 58m/m
	Depth 135m/m
Weight:	1.13kg

Semiconductors:

FM	RF amplifier	2SC1342	× 1
	Frequency mixer	2SC461B	× 1
	Local oscillator	2SC461B	× 1
	AFC	001-0130-00 (1S2790WT)	× 1
	IF amplifier	2SC460B	× 4
	Detector	001-0020-00 (1N60)	× 2
AM	RF amplifier	2SC460B	× 1
	Frequency converter	2SC454B	× 1
	IF amplifier	2SC460B	× 1
	Detector	001-0095-00 (1S2076)	× 1
	AGC	001-0010-00 (1N34A)	× 1
	Audio output amplifier	051-0036-01,02 (HA-1322)	×1
	Voltage regulator	001-0099-01 (HZ-7B)	× 1

Printed in Japan 298-1768-00

* COMPONENT VIEW:

	Main unt	1
284-2502-00	Installation	1
280-3309-00	Owners guide	1
281-0240-01	Warranty card	1
SPA-386-000	Speaker assembly	1

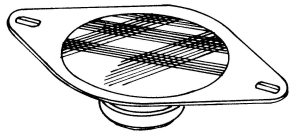

921-6201-00 **Parts bag** **1**

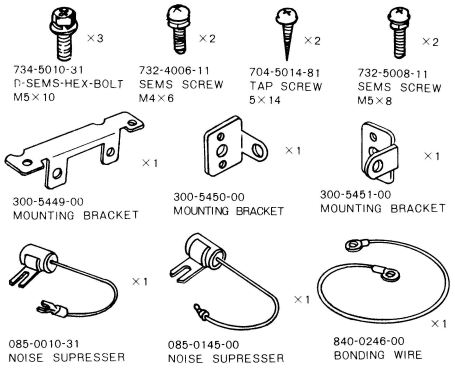

* DIFERENCE BETWEEN RE-344B AND RU-344A

AM	53	70	100	140	160	x10KHz
FM	88	93	98	103	108	MHz

RU-344A

AM	53	70	100	140	160	x10KHz
FM	88	93	98	103	108	MHz

RE-344B

*** Only the dial plate marked with is available as spare part.**

* FEATURES:

- Strict noise eliminating measures have been taken.
- Designed to withstand intense shock and vibration.
- Use of silicon transistors enables stable performance against changes in ambient temperature.
- Use of low-noise and high-output power IC provides dynamic sound.

* ADJUSTMENT METHODS:

1. Adjustment of AM tuner

1-1 Instruments required

AM standard signal generator (SSG)
AM IF sweep generator (262.5KHz)
Oscilloscope
Dummy load (4Ω)
VTVM
Dummy antenna (see below Fig.2)

1-2 Adjustment of IF section

1. Connect the sweep generator output to D4 and oscilloscope's vertical terminal to TP3. Turn the tuning knob of the set fully clockwise.
2. When the sweep generator frequency is set to 262.5KHz and its output level is increased, a waveform as shown in Fig.1 is obtained.
   Keep the output of SSG as small as possible and the vertical gain of oscilloscope as large as possible.
3. Adjust the cores of IFT4 and IFT5 to obtain maximum height of the waveform with good symmetry.

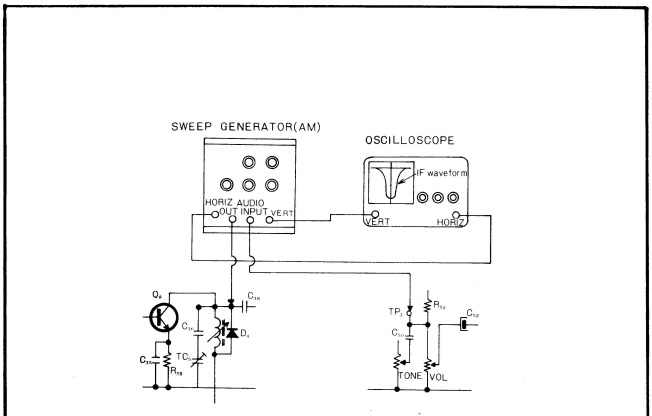

Fig.1

1-3 Tracking adjustment

Apply the output of SSG to the set through dummy load.
Bring the set's dial pointer to the maximum frequency point on the dial and set the AM SG to 1620KHz.
Adjust the OSC trimmer (TC6) to receive 1620KHz.
Now adjust the ANT trimmer (TC4) and RF trimmer (TC5) on the same frequency so that the Audio output becomes maximum.
20~30dB output of SSG is suitable for the adjustment. The volume and tone controls must be at maximum position.

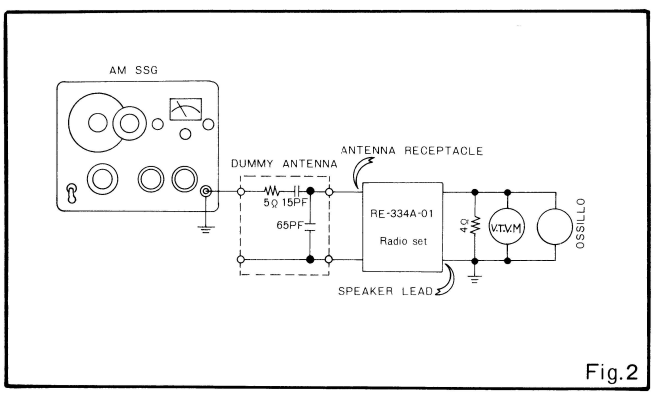

Fig.2

2. Adjustment of FM tuner

2-1 Instruments required

FM standard signal generator (SSG)

FM IF sweep generator (10.7MHz)

Oscilloscope

Dummy load

VTVM

2-2 Adjustment of IF section

1. Connect the sweep generator output to TP1 and oscilloscope's vertical terminal to TP2.
   Turn the tuning knob of the set fully clockwise.
2. With the sweep generator freqvency set to 10.7MHz when the output level of the sweep generator is gradually increased, waveform shown in Fig.3 appears on the CRT screen. Now perform the following adjustment.
   Keep the FM SSG output as small as possible and the vertical gain of oscilloscope as large as possible.
3. Adjust the core (green) of IFT1 for maximum height of the waveform with good symmetry.
   Adjust the core (blue) of IFT3 for maximum height of the waveform.
4. Connect the vertical terminal of oscilloscope to TP3. Adjust the core (black) of IFT3 for good linearity and good symmetry of the S-curve.

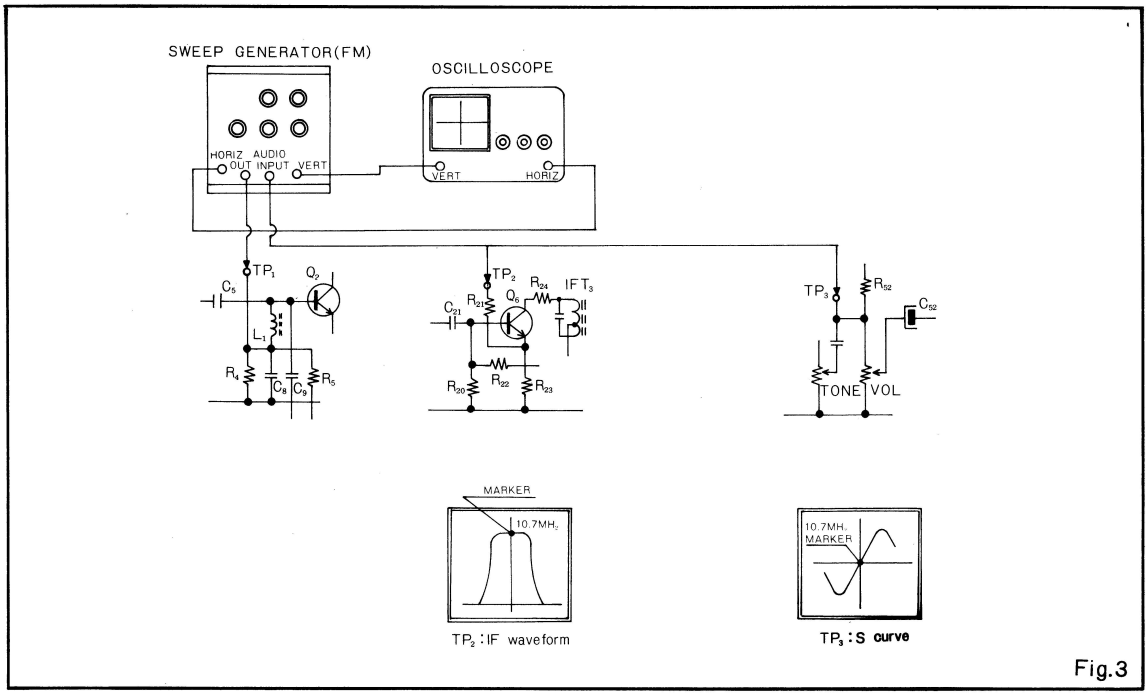

Fig.3

2-3 Tracking adjustment

1. Turn the tuning knob fully counterclockwise (lowest receiving frequency position).
   Adjust the OSC trimmer (TC3) to receive 87.5MHz from the FM SSG.
2. Turn the tuning knob to receive 98MHz. Set the output of FM SSG to approximately 15dB and adjust the ANT trimmer (TC1) and RF trimmer (TC2) to obtain maximum audio output.
   At this time, the volume control and tone control knobs must be at maximum position.

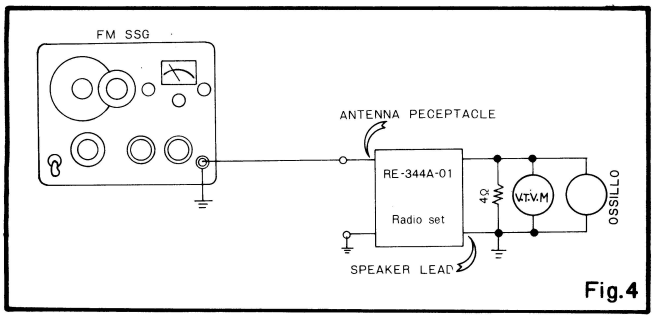

Fig.4

* ADJUSTMENT OF ANTENNA TRIMMER

Antenna trimmer must be adjusted in the following cases. It helps increasing the sensitivity.

- After installing or after repairing the set.
- When the antenna or the antenna cable is replaced.
- When the radio sensitivity is poor and noise is prominent.

Method of adjustment

Set the receiver VOL. control to max., TONE control to max., and the dial pointer to around 1400KHz to receive white noise (hissing noise) and adjust the antenna trimmer (screw) so that the noise output becomes maximum.

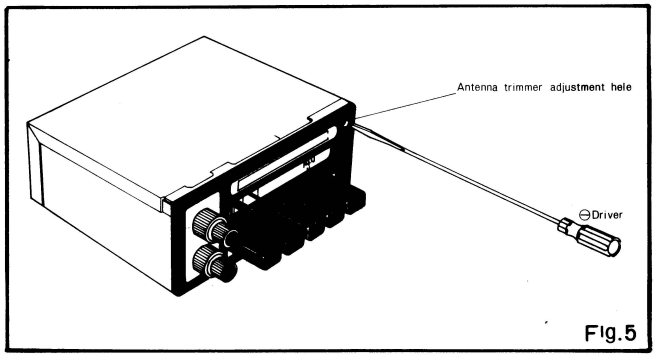

Fig.5

* PRINTED WIRING BOARD:

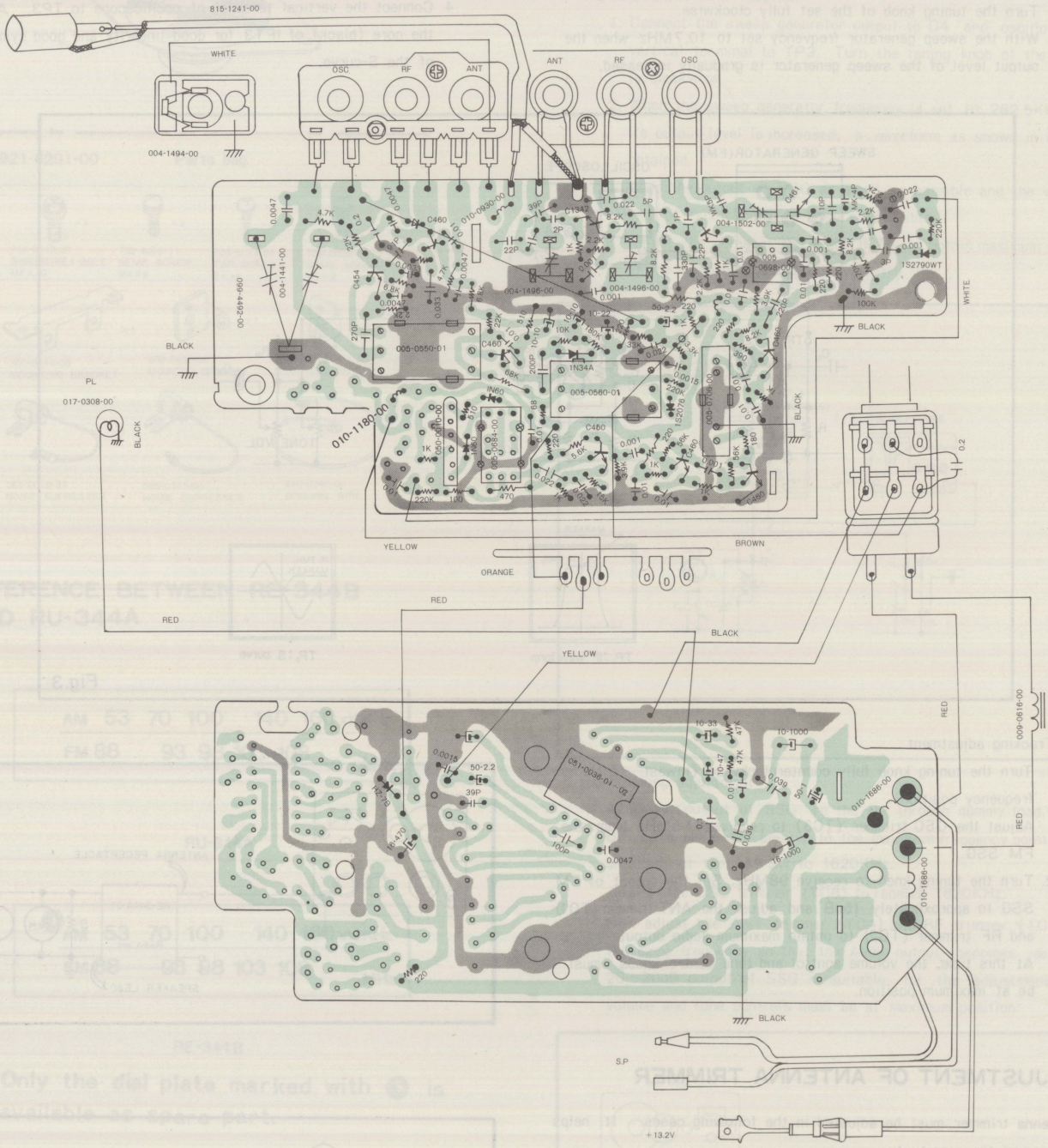

* PRINTED WIRING BOARD:

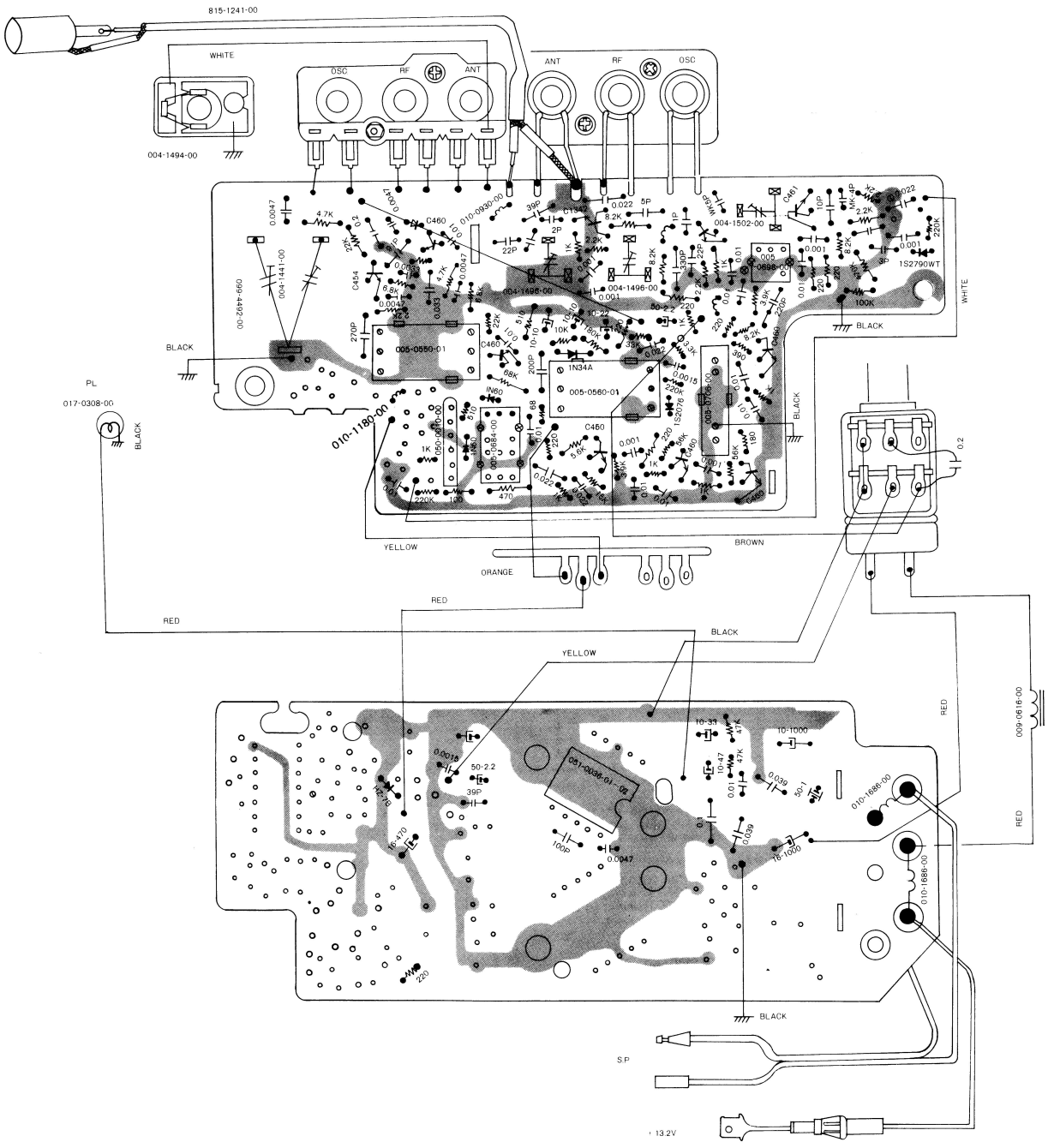

* CIRCUIT DIAGRAM:

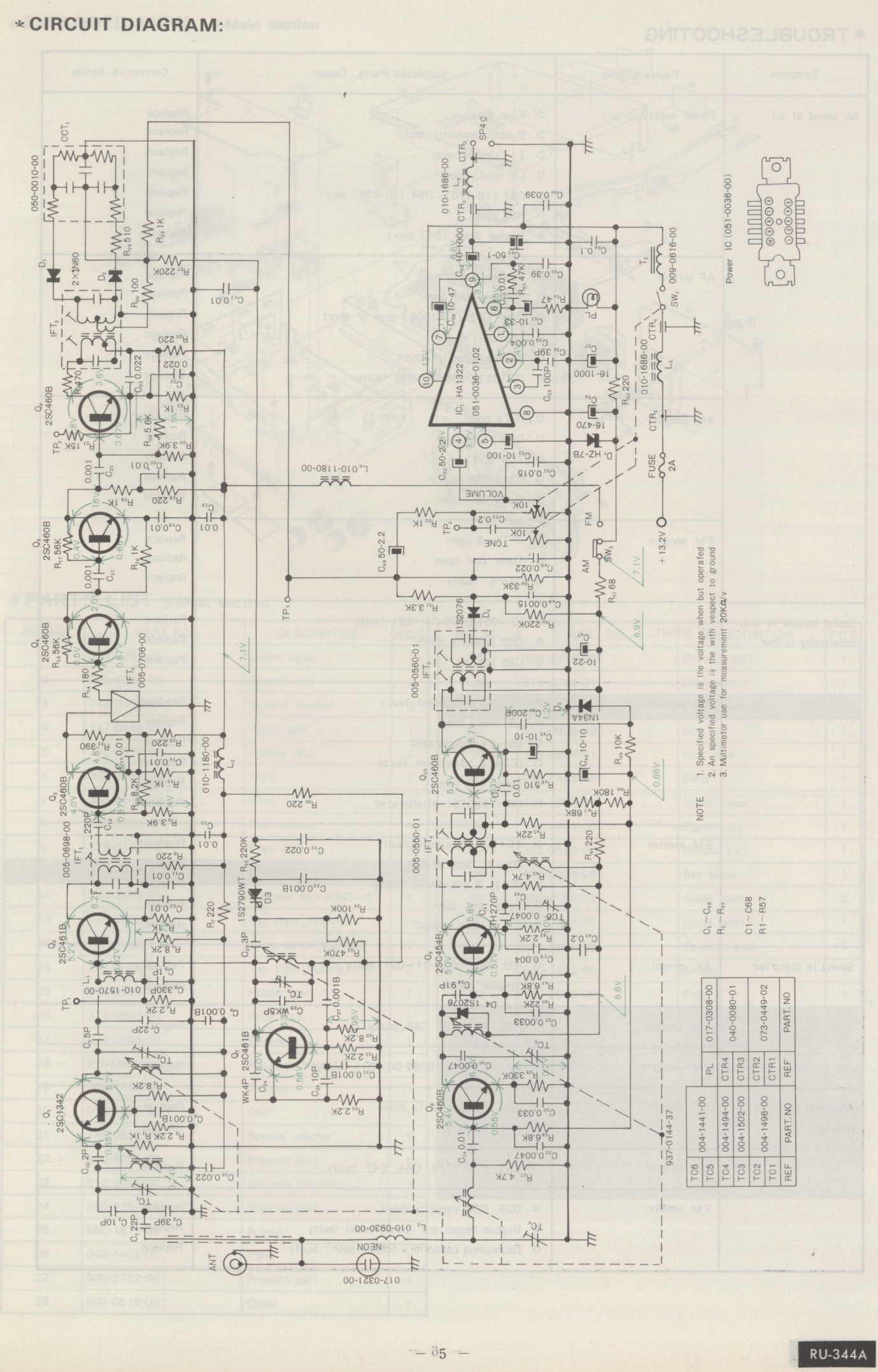

TC6	004-1441-00	PL	017-0308-00	
TC5	004-1494-00	CTR4	040-0080-01	
TC4	004-1502-00	CTR3		
TC3	004-1496-00	CTR2	073-0449-02	
TC2		CTR1		
TC1		REF		
REF	PART. NO		PART. NO	

* CIRCUIT DIAGRAM:

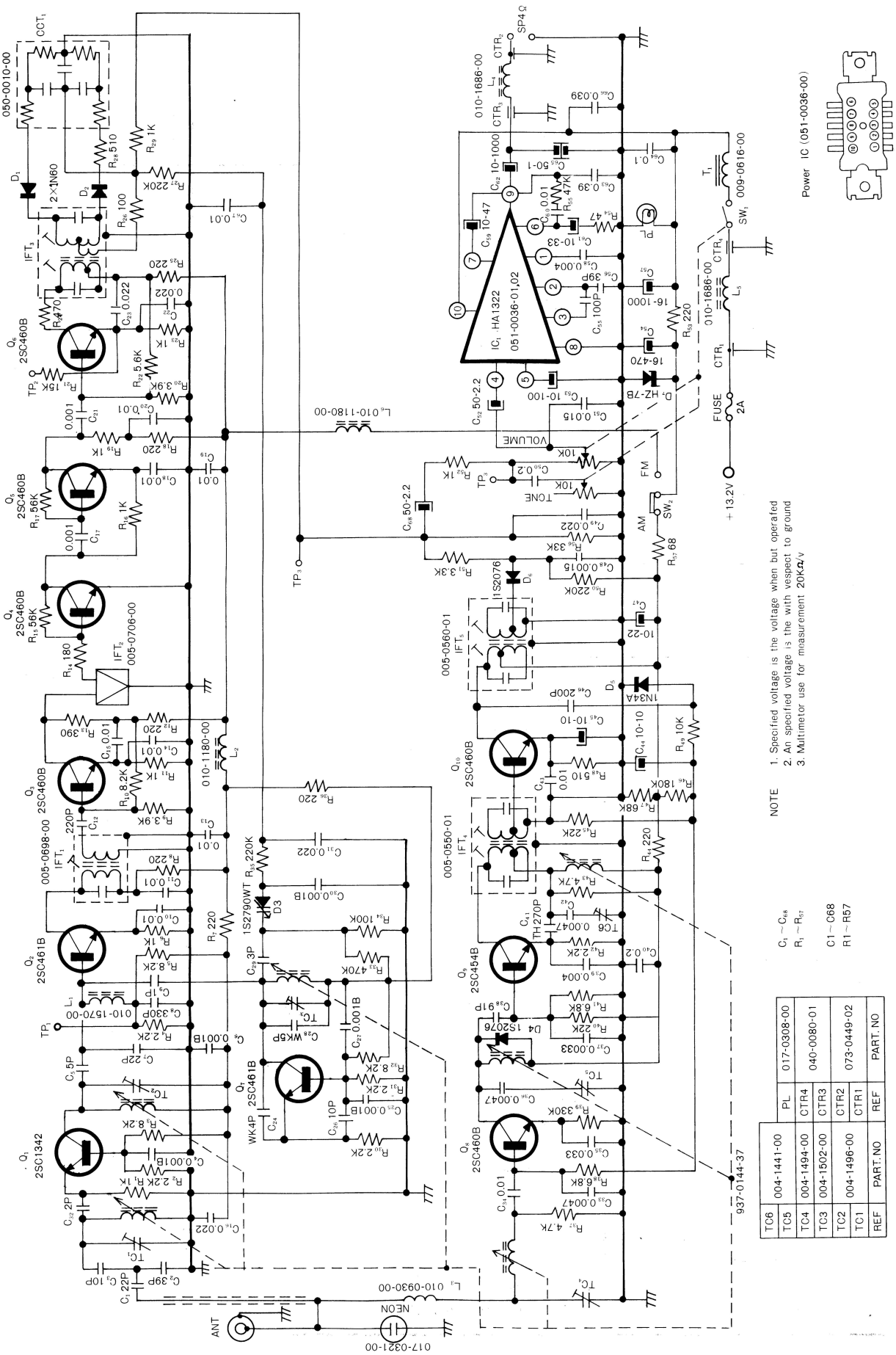

TC6	004-1441-00	PL	017-0308-00		
TC5					
TC4	004-1494-00	CTR4	040-0080-01		
TC3	004-1502-00	CTR3			
TC2	004-1496-00	CTR2	073-0449-02		
TC1		CTR1			
REF	PART. NO	REF	PART. NO		

$C_1 \sim C_{68}$
$R_1 \sim R_{57}$

C1 ~ C68
R1 ~ R57

* TROUBLESHOOTING

Symptom	Faulty Circuit	Suspected Parts, Cause	Corrective Action
No sound at all	Power supply circuit	o Fuse blown	Replace
		o Bypass capacitor short	Replace
		o T1 (choke) open	Replace
		o L5 (coil) open	Replace
		o C57 (16-470), C54 (10-470) short	Replace
		o R53 open	Replace
		o Zeener diode (D7) short	Replace
	AF circuit	o Speaker faulty	Replace
		o Speaker lead open	Replace
		o C59, C62 (10-1000) open or short	Replace
		o L4 (coil) open	Replace
		o Bypass capacitor short	Replace
		o IC (051-0036-01~02) faulty	Replace
	AM section	o IFT4 open	Replace
		o Q9~11 faulty	Replace
		o TC4 short	Replace
		o C34, C38 faulty	Replace
		o Tuner coil open	Replace
	FM section	o IFT1~3 open	Replace
		o Tuner coil open	Replace
		o Q1~8 faulty	Replace
Sound volume is low, sensitivity is bad	AF circuit	o IC (051-0036-01~02) faulty	Replace
		o C62 capacity down	Replace
		o C65 leaking	Replace
	AM section	o TC4~6 adjustment faulty	Readjust
		o L3 (coil) open	Replace
		o Q9~11 deteriorated	Replace
		o IFT4, 5 adjustment faulty	Readjust
		o Tuner coil open	Replace
		o D6 (152076) deteriorated	Replace
	FM section	o TC1~3 adjustment faulty	Readjust
		o Q1~7 deteriorated	Replace
		o IFT1, 3 adjustment faulty	Readjust
		o Tuner coil open	Replace
		o D1, 2 deteriorated	Replace
Sound is distorted	AF circuit	o IC3 (051-0036-01~02) faulty	Replace
		o Speaker faulty	Replace
	AM section	o R38, R49, D5, C46 faulty	Replace
	FM section	o Q7, IC1 (051-0050-00~01) faulty	Replace
Abnormal sound is coming	AF circuit	o C54, C57 capacity down	Replace
		o IC2, 3 faulty	Replace
	AM section	o C33, C37, C43, C44, C47 faulty	Replace
	FM section	o C29, C30 capacity down	Replace
		o Bypass capacitors (check each) faulty	Replace
		o Decoupling capacitors (check each) faulty	Replace

* EXPLODED VIEW: ⊙Main section

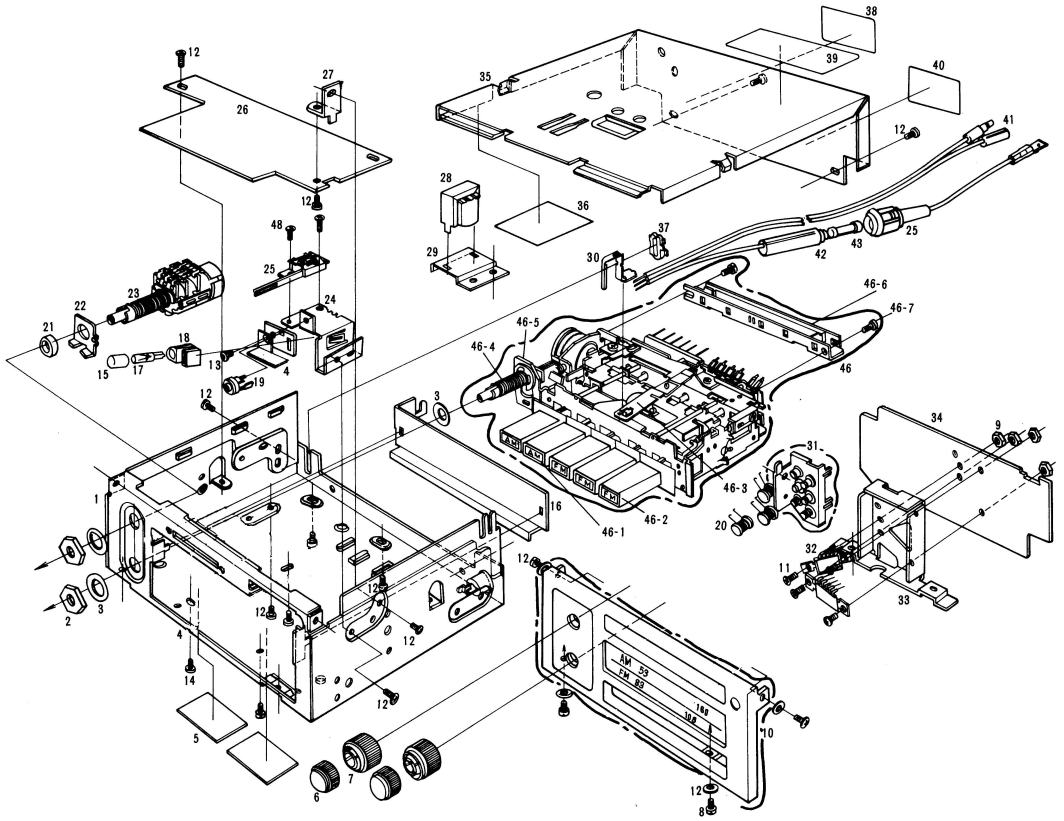

* PARTS LIST ⊙Main section

REF.NO.	PART NO.	DESCRIPTINO	P.C.S
1	311-0881-00	Lower case	1
2	722-0231-00	Special nut	2
3	745-0430-01	Special washer	3
4	347-0564-00	Paper part	1
5	345-2658-00	Rubber part	2
6	380-3542-00	Knob	2
7	380-3543-00	Knob	2
8	740-3000-10	Flat washer	4
9	725-0182-00	Plate nut	2
10	940-0017-A	Escutcheon assembly	1
11	714-3006-81	Machine screw(M3×6)	2
12	731-3006-80	Tap tight(M3×6)	14
13	732-3006-11	Sems screw(M3×6)	1
14	731-3006-40	Tap tight(M3×6)	3
15	345-2655-00	Rubber part	1
16	374-0683-00	Back plate	1
17	017-0308-00	Pilotlamp	1
18	070-0952-00	Pilotlamp socket	1
19	004-1494-00	Trimmer	1
20	010-1686-00	Coil	1
21	745-0553-00	Special washer	1
22	330-5751-00	Pressed part	1
23	012-3349-00	Variable resistor	1
24	330-5757-00	Pressed part	1
25	850-1875-00	A-lead	1
26	099-4492-00	PWB	1
27	330-5752-00	Pressed part	1
28	009-0616-00	Choke	1

REF.NO.	PART NO.	DESCRIPTION	P.C.S
29	330-5248-00	Pressed part	1
30	376-0754-01	Dial pointor	1
31	944-0045-00	Filter assembly	1
32	051-0036-02	IC	1
33	313-0907-01	Heat sink	1
34	099-4493-00	PWB	1
35	310-0850-00	Upper case	1
36	347-0461-00	Paper part	1
37	335-0580-00	Molded part	1
38	286-3872-00	Set plate	1
39	285-0160-00	Guide label	2
40	285-0582-00	Guide label	1
41	851-1660-00	Speaker lead	1
42	850-1822-00	A-lead	1
43	120-0020-00	Fuse	1
44	937-0144-37	6 coil push button tuner	1
44-1	965-2026-00	Button assembly (AM)	2
44-2	965-2027-00	Button assembly (FM)	3
44-3	965-2015-00	Pointor arm assembly	1
44-4	965-2117-00	Tuning shaft assembly	1
44-5	744-0005-00	Special E-ring	1
44-6	013-3102-01	Switch	1
44-7	731-3006-80	Tap tight (M3×6)	2

⊙RF. SECTION

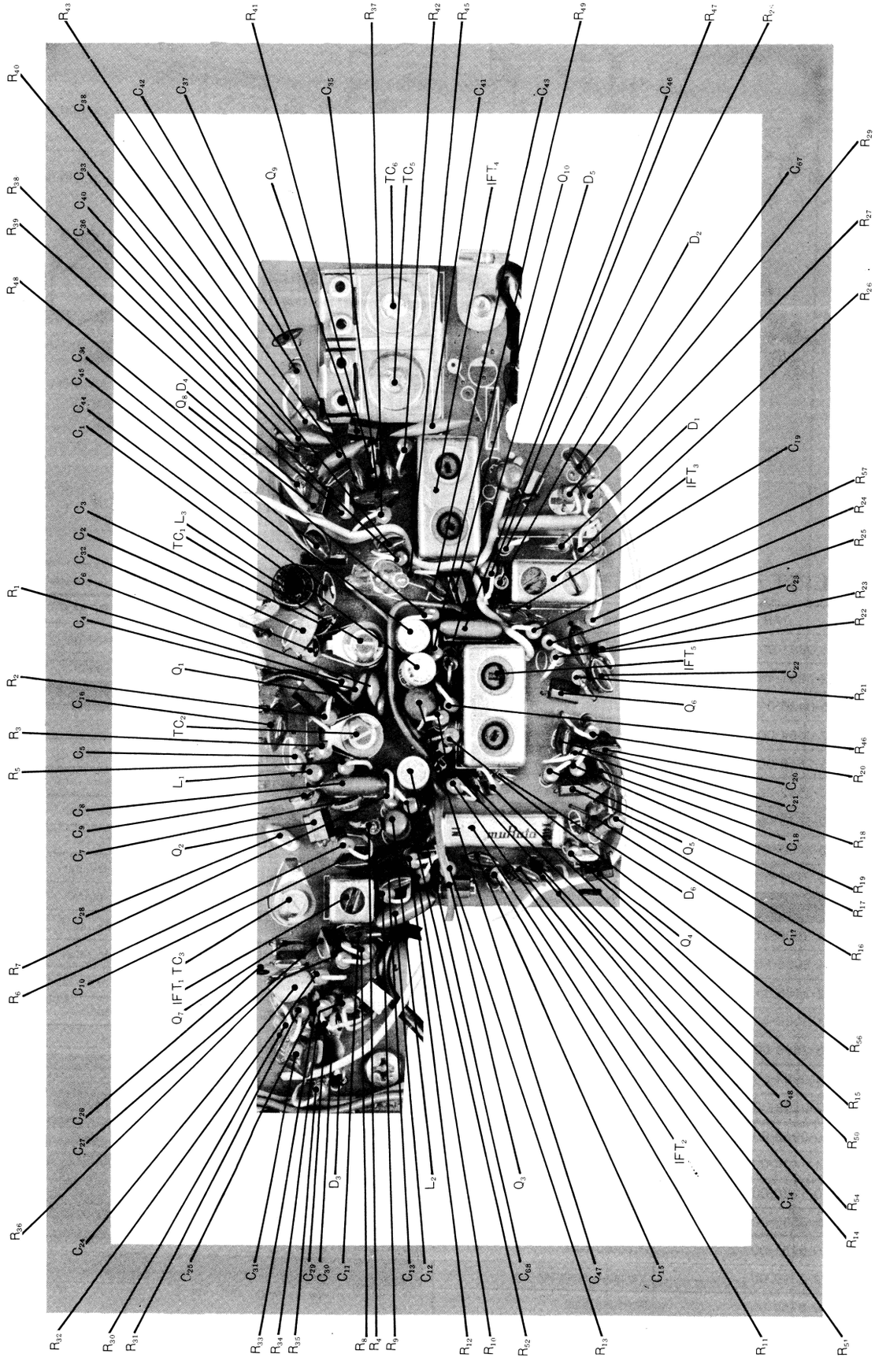
R43
R41
R37
R42
R45
R49
R47
R40
C38
C42
C37
C35
C41
C43
C46
R38
C33
C40
Q9
TC6
TC5
IFT4
Q10
D5
R39
C36
D2
R48
C45
C39
C44
Q8, D4
C1
D1
C19
IFT3
R57
R24
R25
C3
TC1, L3
C2
C22
C6
R1
C4
C23
R23
R22
Q1
IFT5
C22
R2
C16
Q6
R21
R3
TC2
R46
C5
R5
L1
R20
C21
C20
C8
C9
C7
Q2
R18
Q5
C18
D6
R19
R17
C28
Q4
C12
R16
R7
R6
C10
Q7, IFT1, TC3
R56
R15
C48
C27
C29
R50
IFT2
D3
L2
Q3
C14
R54
R36
C24
C25
C31
C29
C30
C11
C13
C12
C68
C47
C15
R14
R32
R30
R31
R33
R34
R35
R6
R4
R9
R12
R16
R52
R13
R11
R51

* PARTS LIST:

⊙RF SECTION

REF.NO.	PART NO.	DESCRIPTION	P.C.S
Q_1	2SC1342	Transistor	1
$Q_{2,7}$	2SC461B	Transistor	2
$Q_{3,4,5,6,8,10}$	2SC460B	Transistor	6
Q_9	2SC454B	Transistor	1
$D_{1,2}$	001-0020-00	Diode (1N60)	2
D_3	001-0130-00	Diode (1S2790WT)	1
$D_{4,6}$	001-0095-00	Diode (1S2076)	2
D_5	001-0010-00	Diode (1N34A)	1
$TC_{1,2}$	004-1496-00	Trimmer	2
TC_3	004-1502-00	Trimmer	1
$TC_{5,6}$	004-1441-00	Trimmer	2
IFT_1	005-0698-00	IF-trans	1
IFT_2	005-0706-00	IF-trans	1
IFT_3	005-0684-00	IF-trans	1
IFT_4	005-0550-01	IF-trans	1
IFT_5	005-0560-01	IF-trans	1
L_1	010-1570-00	Coil	1
L_2	010-1180-00	Coil	1
L_3	010-0930-00	Coil	1
$C_{1,7}$	152-2202-13	Ceramic capacitor (22PF)	2
C_2	152-3902-13	Ceramic capacitor (39PFCH)	1
$C_{3,26}$	151-1002-13	Ceramic capacitor (10PF)	2
$C_{4,6,25,27,30}$	043-0053-00	Special capacitor (0.001μF)	5
C_5	151-5097-13	Ceramic capacitor (5PF)	1
C_8	144-3312-17	Mica capacitor (50V330PF)	1
C_9	153-1096-13	Cercmic capacitor (1PFCH)	1
$C_{10,13,11,14,15,18,19,20,34,43,67}$	141-1033-12	Polyester capacitor (50V0.01μF)	11
C_{12}	144-2212-17	Mica capacitor (50V220PF)	1
$C_{16,22,23,31}$	141-2233-13	Polyester capacitor (50V0.022μF)	4
$C_{17,21}$	141-1023-11	Polyester capacitor (50V0.001μF)	2
C_{24}	153-4097-70	Ceramic capacitor (4PFWK)	1
C_{28}	153-5097-70	Ceramic capacitor (5PFWK)	1
C_{29}	153-3096-13	Ceramic capacitor (3PFCH)	1
$C_{33,39,36,42}$	141-4723-12	Polyester capacitor (50V0.0047μF)	4
C_{35}	141-3333-13	Polyester capacitor (50V0.033μF)	1

REF.NO.	PART NO.	DESCRIPTION	P.C.S
C_{37}	141-3323-12	Polyester capacitor (50V0.0033μF)	1
C_{38}	144-9102-14	Mica capacitor (50V91PF)	1
C_{40}	043-0020-00	Special capacitor (0.2μF)	1
C_{41}	156-2711-50	Ceramic capacitor (270PF-TH)	1
$C_{44,45}$	180-1064-22	Electrolytic capacitor (10V10μF)	2
C_{46}	144-2012-17	Mica capacitor (50V200PF)	1
C_{47}	042-0199-00	Special capacitor (10V2.2μF)	1
C_{48}	141-1523-12	Polyester capacitor (50V0.0015μF)	1
C_{68}	180-2254-62	Electrolytic capacitor (50V2.2μF)	1
$R_{2,30,31,42}$	111-2221-32	Film resistor (¼W2.2KΩ±5%)	4
$R_{1,6,11,19,23,29,52}$	111-1021-32	Film resistor (¼W 1KΩ±5%)	7
$R_{3,5,10,32}$	111-8221-32	Film resistor (¼W8.2KΩ±5%)	4
$R_{7,8,12,18,25,36,44}$	111-2211-32	Film resistor (¼W220Ω ±5%)	7
$R_{9,20}$	111-3921-32	Film resistor (¼W3.9KΩ±5%)	2
R_{13}	111-3911-32	Film resistor (¼W390Ω ±5%)	1
R_{14}	111-1811-32	Film resistor (¼W180Ω ±5%)	1
R_{15}	111-5631-32	Film resistor (¼W 56KΩ±5%)	1
R_{21}	110-1031-32	Solid resistor (¼W 10KΩ±5%)	1
R_{22}	111-5621-32	Film resistor (¼W5.6KΩ±5%)	1
R_{24}	111-4711-32	Film resistor (¼W470Ω ±5%)	1
R_{26}	111-1011-32	Film resistor (¼W100Ω ±5%)	1
$R_{27,35,50}$	111-2241-32	Film resistor (¼W220KΩ±5%)	3
$R_{28,48}$	111-5111-32	Film resistor (¼W510Ω ±5%)	2
R_{33}	111-4741-32	Film resistor (¼W470KΩ±5%)	1
R_{34}	111-1041-32	Film resistor (¼W100KΩ±5%)	1
$R_{37,43}$	111-4721-32	Film resistor (¼W4.7KΩ±5%)	2
$R_{38,41}$	111-6821-32	Film resistor (¼W6.8KΩ±5%)	2
R_{39}	111-3311-32	Film resistor (¼W330Ω ±5%)	1
$R_{40,45}$	111-2231-32	Film resistor (¼W 22KΩ±5%)	2
R_4	110-2221-32	Solid resistor (¼W2.2KΩ±5%)	1
R_{46}	111-1841-32	Film resistor (¼W180KΩ±5%)	1
R_{47}	111-6831-32	Film resistor (¼W 68KΩ±5%)	1
R_{49}	111-1031-32	Film resistor (¼W 10KΩ±5%)	1
R_{51}	111-3321-32	Film resistor (¼W3.3KΩ±5%)	1
R_{57}	111-6801-32	Film resistor (¼W 68Ω ±5%)	1

⊙AF SECTION

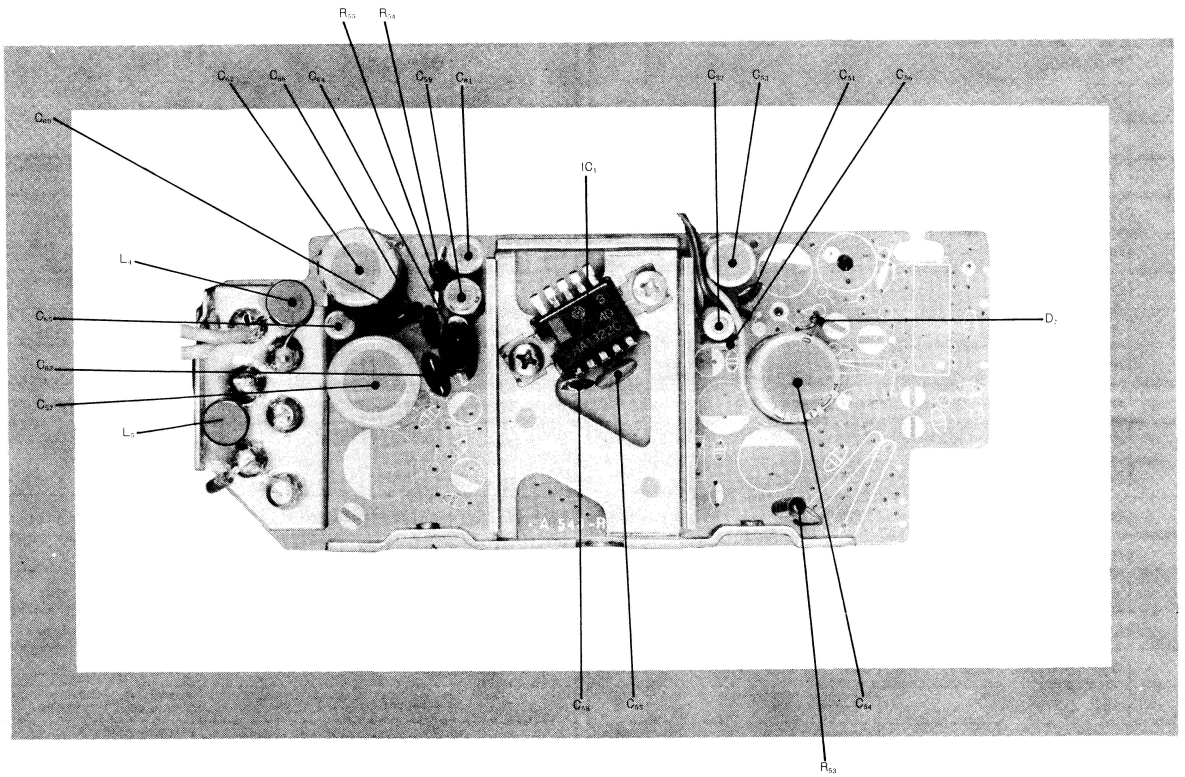

＊PARTS LIST:

⊙AF SECTION

REF.NO.	PART NO.	DESCRIPTION	P.C.S
IC_1	051-0036-02	IC	1
D_7	001-0099-01	Diode (HZ-7B)	1
$L_{4,5}$	010-1686-00	Coil	2
C_{51}	141-1523-12	Polyester capacitor (50V0.0015μF)	1
C_{52}	180-2254-62	Electrolytic capacitor (50V2.2μF)	1
C_{53}	180-1074-22	Electrolytic capacitor (10V100μF)	1
C_{54}	180-4774-32	Electrolytic capacitor (16V470μF)	1
C_{55}	144-1012-14	Mica capacitor (50V100PF)	1
C_{56}	152-3902-13	Ceramic capacitor (39PFCH)	1
C_{57}	042-0178-00	Special capacitor (16V1000μF)	1
C_{58}	141-4723-12	Polyester capacitor (50V0.0047μF)	1
C_{59}	180-4764-22	Electrolytic capacitor (10V47μF)	1
C_{60}	141-1033-12	Polyester capacitor (50V0.01μF)	1
C_{61}	180-3364-22	Electrolytic capacitor (10V33μF)	1
$C_{63,66}$	141-3933-13	Polyester capacitor (50V0.039μF)	2
C_{62}	042-0153-00	Special capacitor (10V1000μF)	1
C_{64}	141-1043-15	Polyester capacitor (50V0.1μF)	1
C_{65}	180-1054-62	Electrolytic capacitor (50V1μF)	1

⊙MISCELLANEOUS

REF.NO.	PART NO.	DESCRIPTION	P.C.S
	043-0020-00	Special capacitor (0.2μF)	1
	043-0053-00	Special capacitor (0.001μF)	2
R_{53}	110-2211-42	Solid resistor (½W220Ω±5%)	1
	111-4701-00	Film resistor (¼W 47Ω±5%)	1
R_{52}	111-1021-32	Film resistor (¼W 1KΩ±5%)	1
	111-4731-32	Film resistor (¼W47KΩ±5%)	1
R_{15}	111-5631-32	Film resistor (¼W56KΩ±5%)	1
	141-4723-12	Polyester capacitor (50V0.0047μF)	1
	141-1033-12	Polyester capacitor (50V0.01μF)	1
	141-2233-13	Polyester capacitor (50V0.022μF)	2
R_{56}	111-3331-32	Film resistor (¼W33KΩ±5%)	1