Clarion

# SERVICE MANUAL

Closer Relations through "CLARION SERVICE MANUAL"

# MODEL RU-140A·B


Fabricant: CLARION CO., LTD./Exportations: CLARION SHOJI CO., LTD.

3, Kojimachi 5-chome, Chiyoda-ku, Tokyo, 102 Japan Tel.: (265) 2931 Telex: J22908, J22152 CLARISHO

Succursales outre-mer:

**CLARION SHOJI (EUROPA) G.M.B.H.** 2000 Hamburg 76, Schöne Aussicht 35, West Germany. Tel.: 220-7667 Telex: 41214969

**CLARION SHOJI CO., LTD. (U.S.A.)** 5500 Rosecrans Ave., Lawndale, Calif., 90260 U.S.A. Tel.: 213-973-1100 Telex: 66-4447

**CLARION CORPORATION OF AMERICA** 5500 Rosecrans Ave., Lawndale, Calif., 90260 U.S.A. Tel.: 213-973-1100 Telex: 66-4447

**CLARION CORPORATION OF AMERICA, EASTERN DIVISION** 421 North Midland Ave., Saddle Brook, N.J. 07662 U.S.A. Tel.: 201-791-1200 Telex: 13805

**CLARION (MALAYSIA) SDN. BHD.** 9 1/2 m.s. Bayan Lepas, Penang, Malaysia Tel.: 897-206, 897-334 Telex: PG 255 (Penang)

**CLARION DO BRASIL INDUSTRIA E COMERCIO LTDA.** Caixa Postal 5033, Sao Paulo, Brasil Tel.: 32-5161 Telex: 3821123

**CLARION (HONG KONG) CO., LTD.** 225 Ping Chau Gallery, Ocean Terminal, Kowloon, H.K. Tel.: 3-675785 Telex: HK4922


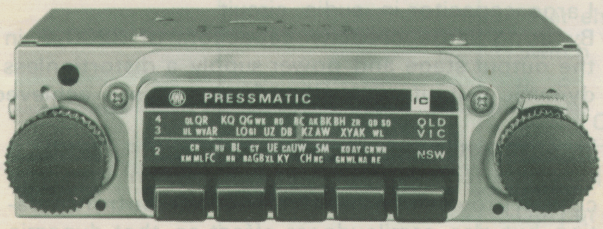


MODEL RU-140A

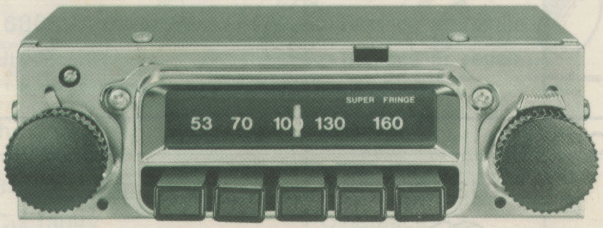


MODEL RU-140B

## *SPECIFICATIONS

| | |
|---|---|
| Circuit system: | Superhetrodyne |
| Tuning system: | μ-tuning, 5push-buttons |
| Receiving range: | 530~1610KHz |
| Intermediate frequency: | 452.5KHz |
| Maximum sensitivity: | Better than 10dB (at 600, 1000, 1400KHz) |
| Selectivity: | 6~10KHz |
| Image ratio: | More than 90dB |
| Intermediate frequency ratio: | More than 68bB |
| AGC F.O.M: | More than 76dB |
| Fidelity: | 100Hz High 1±3dB<br>Low 9±3dB<br>5000Hz High −14±5dB<br>Low −26±5dB |
| Power output: | 4w (at less than 7.5% distortion) |
| Maximum output: | More than 5w |
| Load impedance: | 4Ω |
| Power requirements: | 14.4V DC (standard voltage) ⊖ ground only |
| Current consumption: | Less than 1A |
| Semiconductors: | 1 IC, 5 transistors, 3 diodes |
| | RF amplifier 2SC460×1 |
| | Frequency converter 2SC460×1 |
| | Local osillator 2SC460×1 |
| | IF amplifier 2SC460×2 |
| | Detector 001-0010-00×1 (1N34A) |
| | Voltage regulator 001-0101-00×1 (HZ9A) |
| | A G C 001-0095-00×1 (1S2076) |
| | A udio output amplifier 051-0036-02,03×1 (HA1322) |
| Dimensions: | Width 160m/m<br>Height 50m/m<br>Depth 120m/m |
| Weight: | 1.1kg |

## *COMPONENT VIEW

RU-140A-01

| | | |
|---|---|---|
| | Main unit | 1 Set |
| 280-3330-00 | Owners guide | 1 |
| 300-4976-00 | Mounting bracket | 1 |

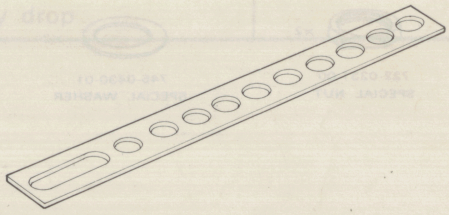




Printed in Japan 298-1780-00

Clarion

# MODEL RU-140A·B

Fabricant: **CLARION CO., LTD.**/Exportations: **CLARION SHOJI CO., LTD.**
3, Kojimachi 5-chome, Chiyoda-ku, Tokyo, 102 Japan Tel.: (265) 2931 Telex: J22908, J22152 CLARISHO
Succursales outre-mer:
**CLARION SHOJI (EUROPA) G.M.B.H.** 2000 Hamburg 76, Schöne Aussicht 35, West Germany. Tel.: 220-7667 Telex: 41214969
**CLARION SHOJI CO., LTD. (U.S.A.)** 5500 Rosecrans Ave., Lawndale, Calif., 90260 U.S.A. Tel.: 213-973-1100 Telex: 66-4447
**CLARION CORPORATION OF AMERICA** 5500 Rosecrans Ave., Lawndale, Calif., 90260 U.S.A. Tel.: 213-973-1100 Telex: 66-4447
**CLARION CORPORATION OF AMERICA, EASTERN DIVISION** 421 North Midland Ave., Saddle Brook, N.J. 07662 U.S.A. Tel.: 201-791-1200 Telex: 13805
**CLARION (MALAYSIA) SDN. BHD.** 9 1/2 m.s. Bayan Lepas, Penang, Malaysia Tel.: 897-206, 897-334 Telex: PG 255 (Penang)
**CLARION DO BRASIL INDUSTRIA E COMERCIO LTDA.** Caixa Postal 5033, Sao Paulo, Brasil Tel.: 32-5161 Telex: 3821123
**CLARION (HONG KONG) CO., LTD.** 225 Ping Chau Gallery, Ocean Terminal, Kowloon, H.K. Tel.: 3-675785 Telex: HK4922

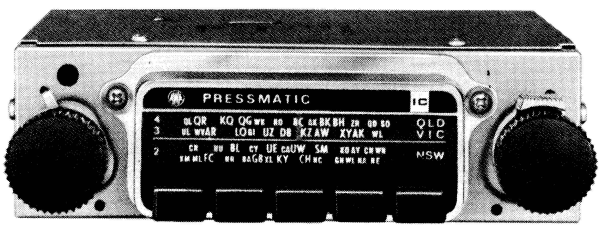


MODEL RU-140A

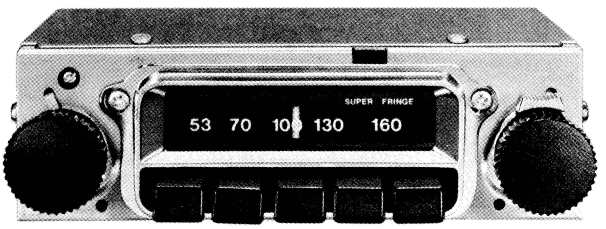


MODEL RU-140B

## *SPECIFICATIONS

| | |
|---|---|
| Circuit system: | Superhetrodyne |
| Tuning system: | μ-tuning, 5push-buttons |
| Receiving range: | 530~1610KHz |
| Intermediate frequency: | 452.5KHz |
| Maximum sensitivity: | Better than 10dB (at 600, 1000, 1400KHz) |
| Selectivity: | 6~10KHz |
| Image ratio: | More than 90dB |
| Intermediate frequency ratio: | More than 68bB |
| AGC F.O.M: | More than 76dB |
| Fidelity: | 100Hz High 1±3dB<br>Low 9±3dB<br>5000Hz High −14±5dB<br>Low −26±5dB |
| Power output: | 4w (at less than 7.5% distortion) |
| Maximum output: | More than 5w |
| Load impedance: | 4Ω |
| Power requirements: | 14.4V DC (standard voltage) ⊖ ground only |
| Current consumption: | Less than 1A |
| Semiconductors: | 1 IC, 5 transistors, 3 diodes |
| | RF amplifier 2SC460×1 |
| | Frequency converter 2SC460×1 |
| | Local osillator 2SC460×1 |
| | IF amplifier 2SC460×2 |
| | Detector 001-0010-00×1 (1N34A) |
| | Voltage regulator 001-0101-00×1 (HZ9A) |
| | AGC 001-0095-00×1 (1S2076) |
| | Audio output amplifier 051-0036-02,03×1 (HA1322) |
| Dimensions: | Width 160m/m<br>Height 50m/m<br>Depth 120m/m |
| Weight: | 1.1kg |

## *COMPONENT VIEW

RU-140A-01

| | | |
|---|---|---|
| | Main unit | 1 Set |
| 280-3330-00 | Owners guide | 1 |
| 300-4976-00 | Mounting bracket | 1 |

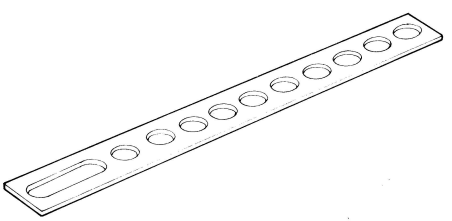



Printed in Japan 298-1780-00

921-6232-00 Parts bag 1

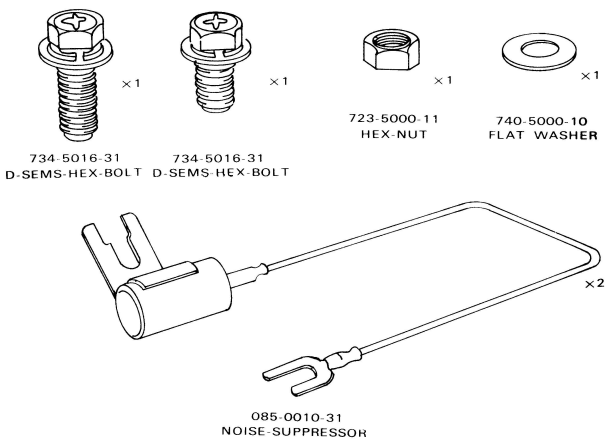


922-0776-00 Parts bag 1

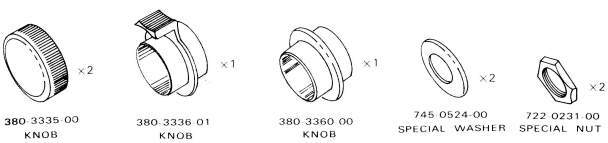


## OPTION

PLE-013-100 accessory box 1 Set

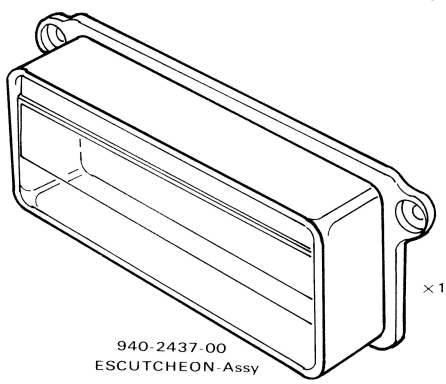


RU-140B-01

| | | |
|---|---|---|
| | Main unit | 1 Set |
| 280-3329-00 | Owners guide | 1 |
| 921-6194-00 | Parts bag | 1 |

## *FEATURES

1. Silicone transistors and IC are used
   This is a high performance car radio using high performance silicone transistors superb temperature characteristic (operate nicely both at low and high temperatures) in the RF section and monolithic IC capable of withstanding adverse vibration and environment in the ausio section.

2. RF circuit with 4-stage tuner and strong AGC circuit
   A sharp tuning characteristic and stable reception is achieved from near the transmitting antenna to weak field areas between buildings or in valleys.

3. Ceramic filter in IF circuit
   Since ceramic filters providing ideal selectivity characteristic are used, adjacent channel interference is eliminated and quite clear reception is achieved.

4. Low-distortion high-performance power IC
   Since specially selected power IC having low distortion characteristic is used in the output stage, the sound output is very pleasant and undistorted.

5. Large capacitor in audio circuit
   By using large capacity capacitors of 2200$\mu$F in the output stage and power supply, a distortionless dynamic output up to low frequencies is achieved.

6. Potentiometer with center tap
   Centered-tapped potentiometer used in the tone control provides not only usual tone control operation but also semiloudness effect so that dynamic sound can be enjoyed even at low volumes.

## *ADJUSTMENTS OF AM TUNER

1. Instruments Required
   (a) AM standard signal generator
   (b) AM IF sweep generator (452.5KHz)
   (c) Oscilloscope
   (d) Dummy load
   (e) Dummy antenna (See below Fig.)

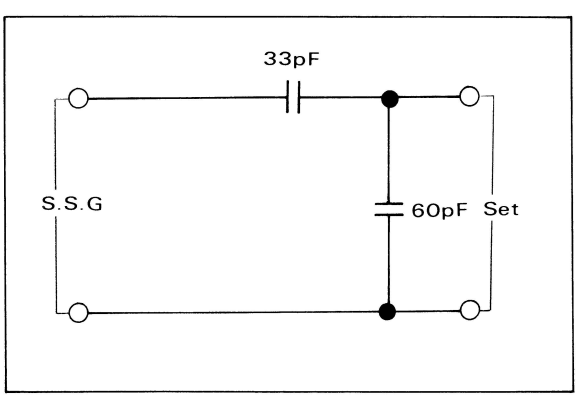


2. IF Adjustments
   (a) Connect the sweep generator output to TP1 and the oscilloscope vertical input to TP2.
   Turn the tuning knob of the set fully to the right. Perform the adjustment with the generator output as small as possible and the oscilloscope vertical gain as large as possible.
   (d) Adjust the cores of IFT1, IFT2 and IFT3 for maximum waveform height with good symmetry.

3. Tracking Adjustments

Apply the output of S.S.G. to the set via dummy antenna. Set the tuning knob for maximum receiving frequency.

Adjust the trimmer (TC4) to receive 1620KHz signal and then set the tuning knob for lowest receiving frequency.

Adjust the coil (L2) to receive 515KHz signal.

Now adjust the trimmer TC1, TC2 and TC3 for maximum audio output on the receiving frequency of 1400KHz.

AT this time, the Volume and Tone knobs should be at the maximum position.

## * TROUBLESHOOTING

| Symptom | Trouble point | Probable cause | Corrective actiom |
|---|---|---|---|
| No sound | Power supply circuit | ○ Fuse blown<br>○ Choke transformer (009-0618-00) open<br>○ Filter choke (010-1686-00) open<br>○ Switch contact faulty<br>○ $R_{32}, R_{36}$ open<br>○ $C_5, C_{34}, C_{48}, C_{49}, C_{50}$ shorted | ○ Replace<br>○ Replace or repair<br>○ Replace or repair<br>○ Replace or repair<br>○ Replace<br>○ Replace |
| | Output circuit | ○ Power IC (051-0036-02,03) faulty<br>○ Output capacitor $C_{46}$ faulty<br>○ Speaker voice coil open | ○ Replace<br>○ Replace<br>○ Replace |
| | RF circuit | ○ Antenna receptacle open<br>○ $\mu$-tuner coil open<br>○ $Q_1 \sim Q_5$ faulty | ○ Replace<br>○ Replace<br>○ Replace |
| Sound distorted | Output circuit | ○ Power IC (051-0036-02,03) defective<br>○ Speaker faulty<br>○ $C_{46}$ faulty | ○ Replace<br>○ Replace<br>○ Replace |
| | RF circuit | ○ Improper adjustment of ANT-trimmer (TC1), RF-trimmer<br>○ Improper adjustment of $IFT_{1\sim3}$<br>○ $Q_{1\sim5}$ defective<br>○ $D_1$, $D_2$ faulty<br>○ $R_{14}, R_{29}, R_{30}, R_{31}$ open or resistance variation | ○ Re-adjust<br>○ Re-adjust<br>○ Replace<br>○ Replace<br>○ Replace |
| Oscillation | Output circuit | ○ Capacity drop of $C_{49}$<br>○ $D_3$ faulty<br>○ Power IC (051-0036-02,03) looseness of mounting screw<br>○ Externally connected capacitor of IC saulty or capacity drop | ○ Replace<br>○ Replace<br>○ Screw bind<br>○ Replace |

## * PRINTED WIRING BOARD:

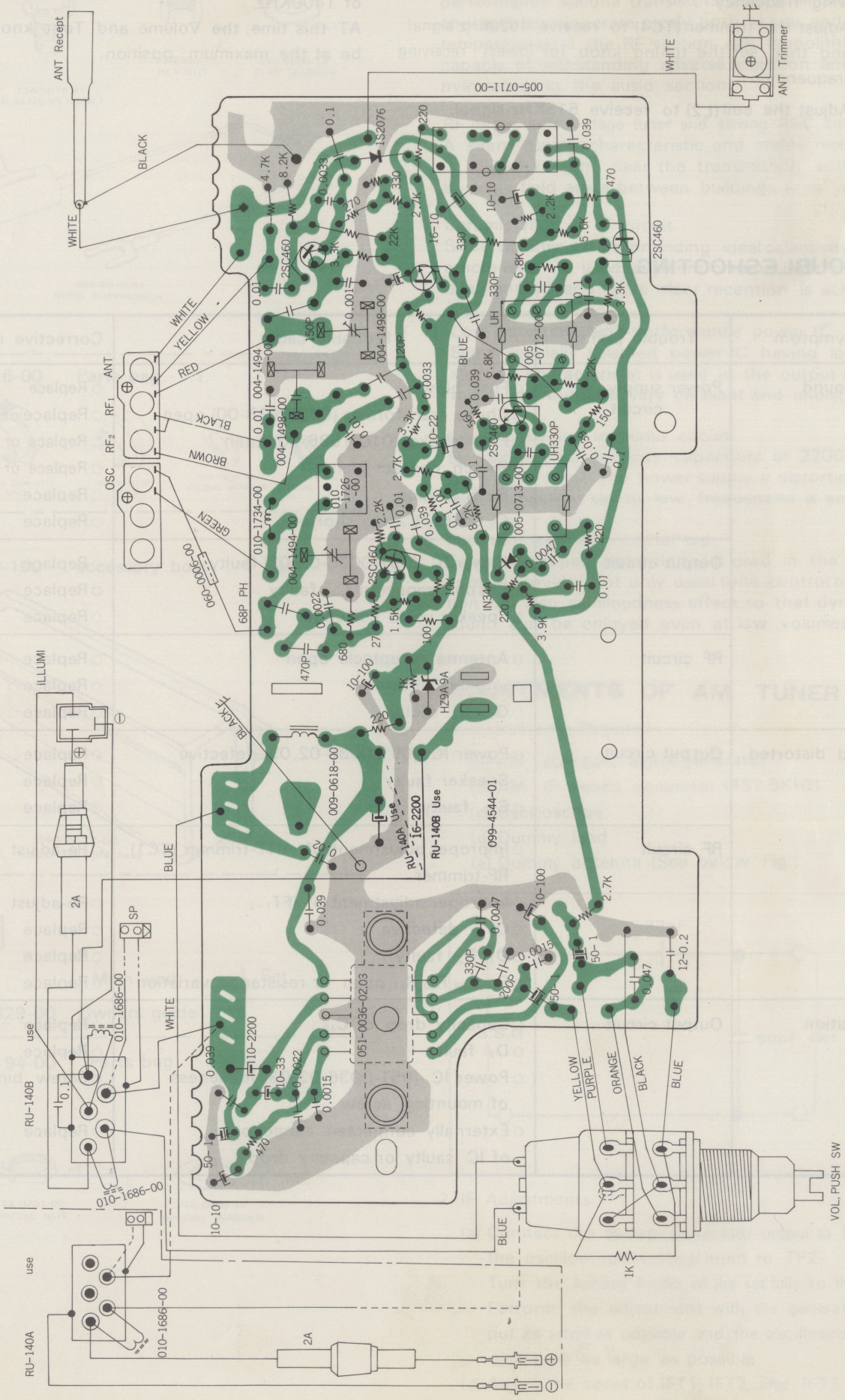

## * PRINTED WIRING BOARD:

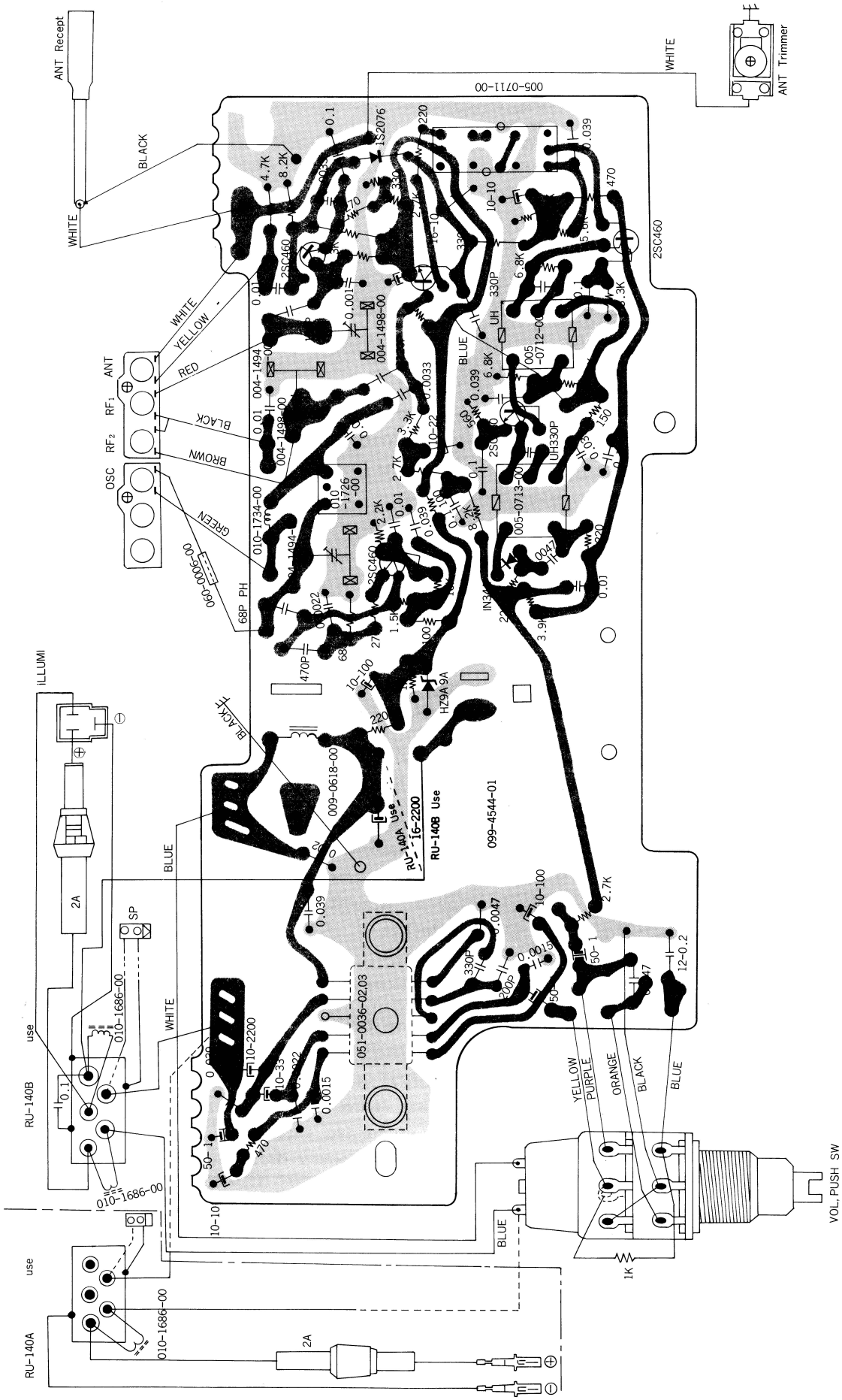

## * CIRCUIT DIAGRAM:

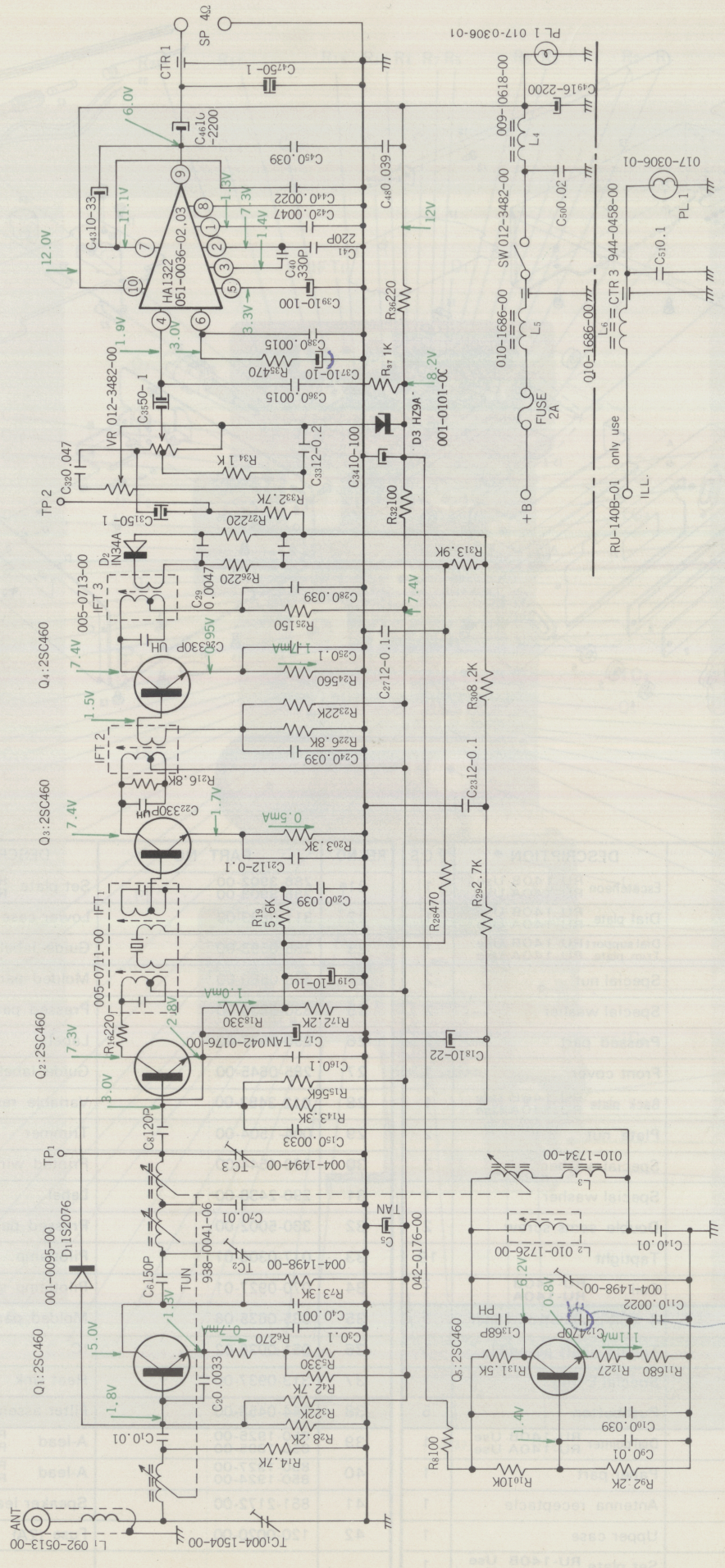

## * CIRCUIT DIAGRAM:

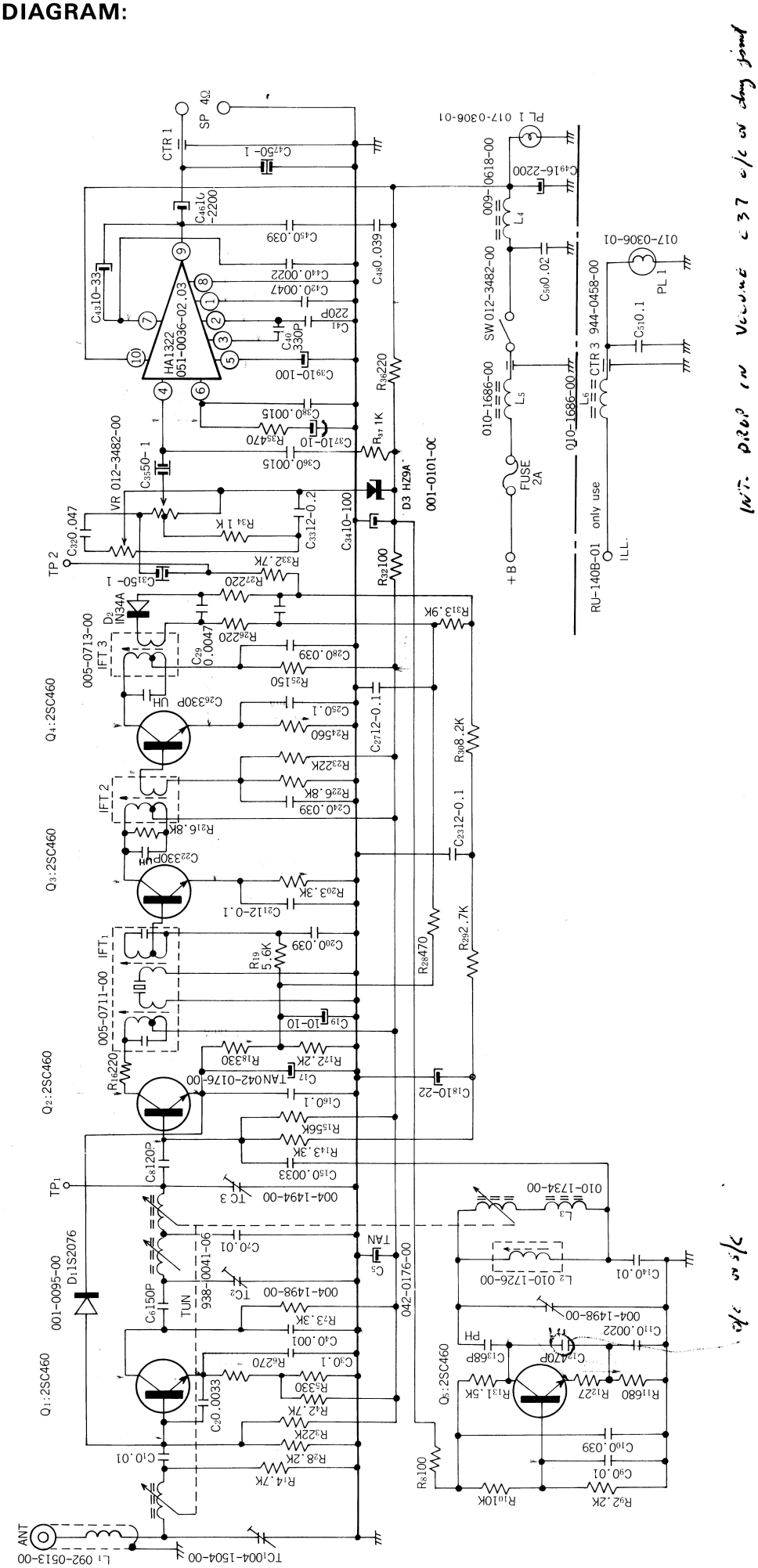


Init. Drop in Volume c37 c/c or chg fixed

c/c or s/c

CRITICAL TUNING - DISTORTION D2 FAULTY

## * EXPLODED VIEW:
### ⊙Main section

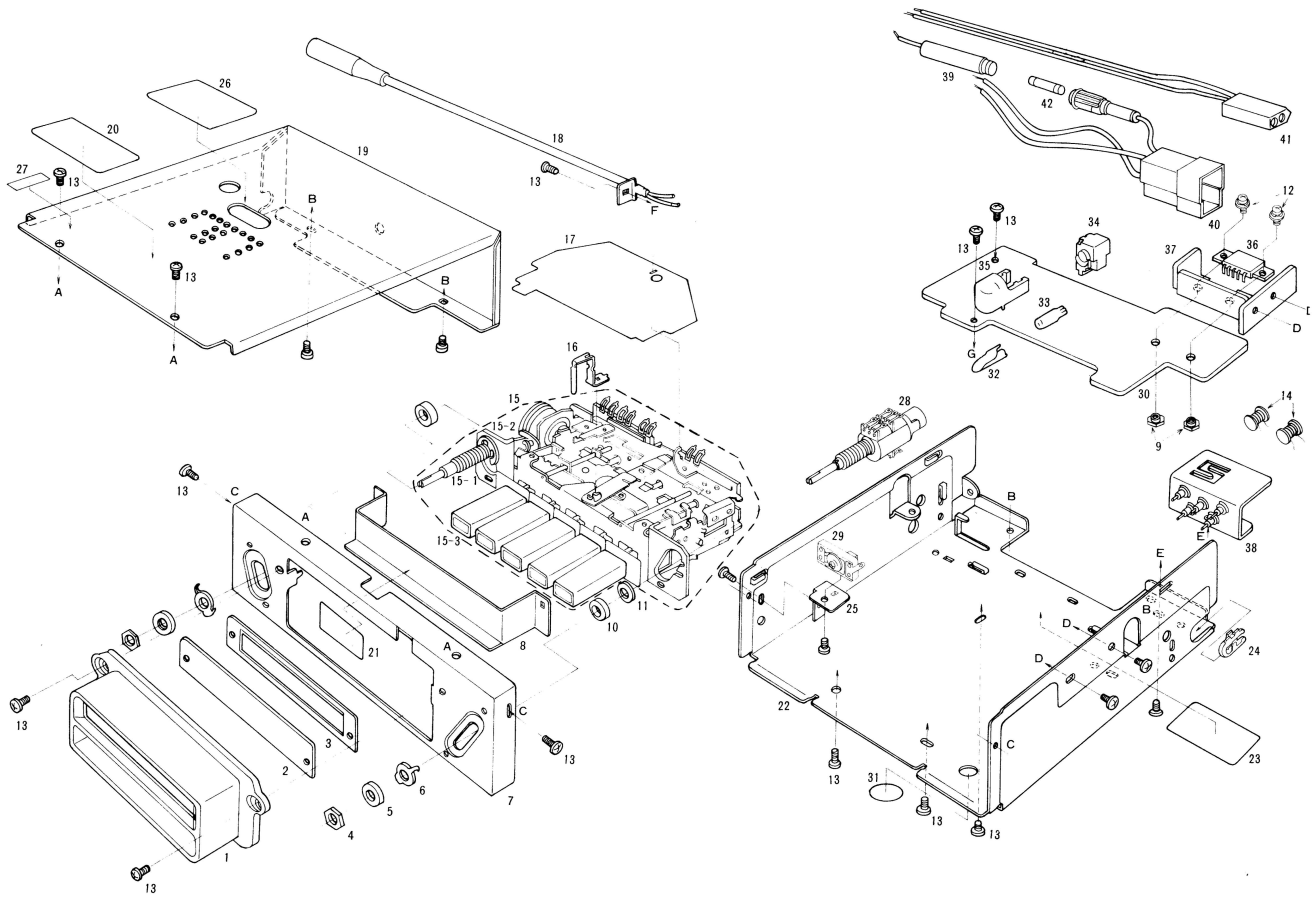

## * PARTS LIST:
### ⊙Main section

| REF.NO. | PART NO | DESCRIPTION | P.C.S |
|---|---|---|---|
| 1 | 370-2803-01<br>370-2994-00 | Escutcheon RU-140B Use<br>RU-140A Use | 1 |
| 2 | 372-2742-00<br>372-2748-00 | Dial plate RU-140B Use<br>RU-140A Use | 1 |
| 3 | 377-0153-00<br>371-2590-00 | Dial support RU-140B Use<br>Trim plate RU-140A Use | 1 |
| 4 | 722-0231-00 | Special nut | 2 |
| 5 | 745-0250-00 | Special washer | 2 |
| 6 | 330-5341-00 | Pressed part | 2 |
| 7 | 308-0865-00 | Front cover | 1 |
| 8 | 374-0689-00<br>374-0690-00 | Back plate RU-140B Use<br>RU-140A Use | 1 |
| 9 | 725-0182-00 | Plate nut | 2 |
| 10 | 745-0220-00 | Special washer | 2 |
| 11 | 745-0430-00 | Special washer | 1 |
| 12 | 735-3008-11 | Double sems screw | 2 |
| 13 | 731-3006-80 | Taptight | 19 |
| 14 | 010-1686-00 | Coil RU-140B<br>RU-140A | 2<br>1 |
| 15 | 938-0041-06 | 4 coil-pushbutton tuner | 1 |
| 15-1 | 965-2425-00 | Tuning shaft assembly | 1 |
| 15-2 | 744-0005-00 | Special E-ring | 1 |
| 15-3 | 680-0045-00 | Pushbutton | 5 |
| 16 | 376-0796-00<br>376-0797-00 | Dial pointer RU-140B Use<br>RU-140A Use | 1 |
| 17 | 347-0523-01 | Paper part | 1 |
| 18 | 092-0513-00 | Antenna receptacle | 1 |
| 19 | 310-0860-00 | Upper case | 1 |
| 20 | 286-3898-00<br>286-3899-00 | Set plate RU-140B Use<br>RU-140A Use | 1 |

| REF.NO. | PART NO | DESCRIPTION | P.C.S |
|---|---|---|---|
| 21 | 286-3902-00<br>286-3903-00 | Set plate RU-140B Use<br>RU-140A Use | 1 |
| 22 | 311-0893-00 | Lower case | 1 |
| 23 | 285-0583-00 | Guide label | 1 |
| 24 | 335-0580-00 | Molded part | 1 |
| 25 | 330-5839-00 | Pressed part | 1 |
| 26 | 290-2577-00 | Label | 1 |
| 27 | 285-0645-00 | Guide label | 1 |
| 28 | 012-3483-00 | Variable resistor | 1 |
| 29 | 004-1504-00 | Trimmer | 1 |
| 30 | 099-4544-00 | Printed wiring board | 1 |
| 31 | 290-2438-00 | Label | 1 |
| 32 | 330-5002-00 | Pressed part | 1 |
| 33 | 017-0306-01 | Pilotlamp | 1 |
| 34 | 070-0927-01 | Pilotlamp socket | 1 |
| 35 | 335-0635-06 | Molded part | 1 |
| 36 | 051-0036-02 | IC | 1 |
| 37 | 313-0937-00 | Heat sink | 1 |
| 38 | 944-0458-00 | Filter assembly | 1 |
| 39 | 850-1925-00<br>850-1895-00 | A-lead RU-140B Use<br>RU-140A Use | 1 |
| 40 | 850-1927-00<br>850-1924-00 | A-lead RU-140B Use<br>RU-140A Use | 1 |
| 41 | 851-2172-00 | Speaker lead | 1 |
| 42 | 120-0020-00 | Fuse (2A) | 1 |
| | | | |

## ⊙Electrical section

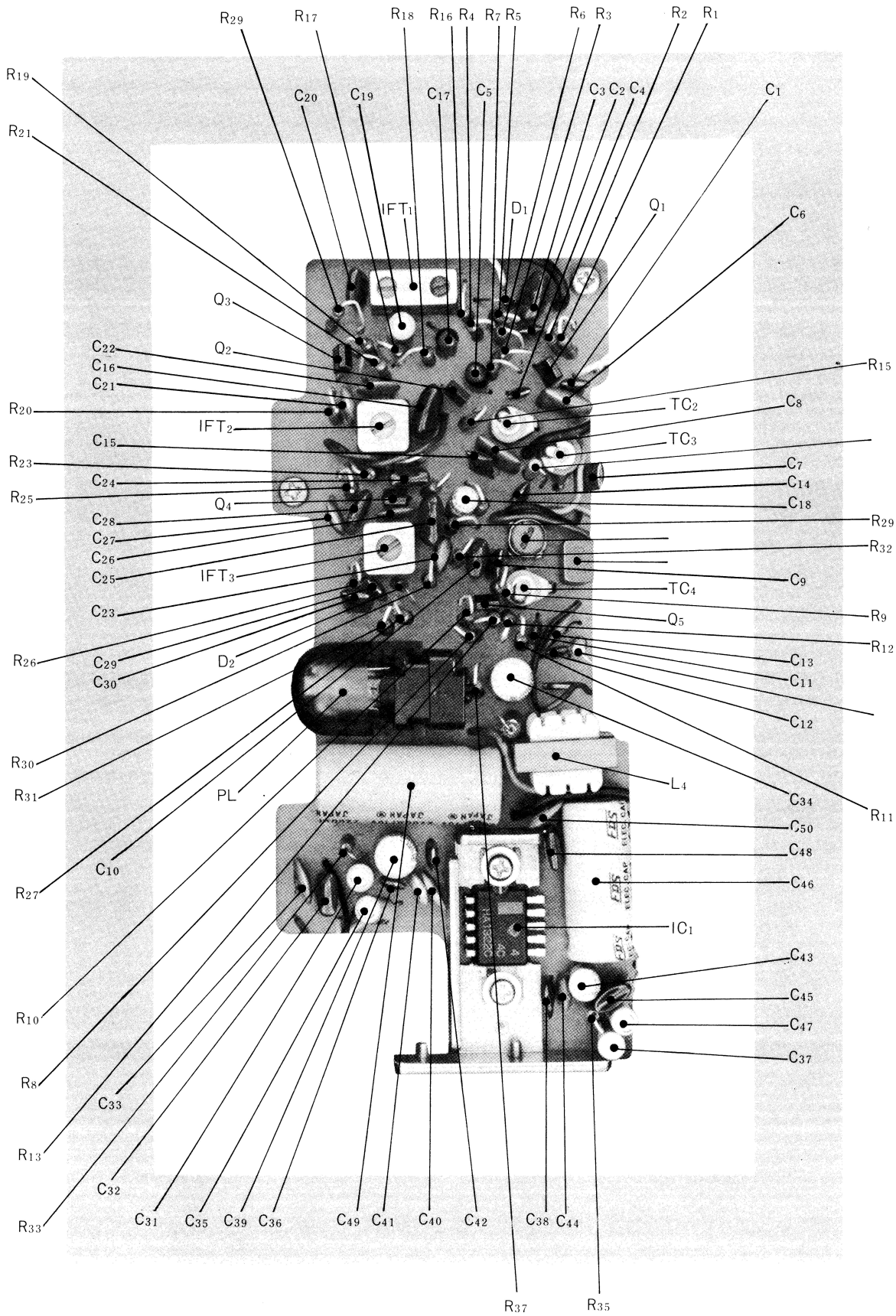

## * PARTS LIST:

### ⊙Electrical section

| REF.NO. | PART NO. | DESCRIPION | P.C.S |
|---|---|---|---|
| $Q_{1\sim5}$ | 102-0460-00 | Transistor (2SC460) | 5 |
| $IC_1$ | 051-0036-02 03 | IC | 1 |
| $D_1$ | 001-0095-00 | Diode | 1 |
| $D_2$ | 001-0010-00 | Diode | 1 |
| $D_3$ | 001-0101-00 | Diode | 1 |
| $IFT_1$ | 005-0711-00 | IF-Transformer | 1 |
| $IFT_2$ | 005-0712-00 | IF-Transformer | 1 |
| $IFT_3$ | 005-0713-00 | IF-Transformer | 1 |
| $L_{5,6}$ | 010-1686-00 | Coil | 2 |
| $L_3$ | 010-1734-00 | Coil | 1 |
| $L_2$ | 010-1726-00 | Coil | 1 |
| $L_4$ | 009-0618-00 | Choke | 1 |
| $TC_3$ | 004-1494-00 | Trimer | 1 |
| $TC_{2,4}$ | 004-1498-00 | Trimer | 2 |
| $C_{49}$ | 042-0165-00 | Special capacitor (16V 2200μF) | 1 |
| $C_{5,17}$ | 042-0176-00 | Special capacitor (16V 10μF) | 2 |
| $C_{46}$ | 042-0208-00 | Special capacitor (10V 2200μF) | 1 |
| $C_{33}$ | 043-0020-00 | Special capacitor (12V 0.2μF) | 1 |
| $C_{21,23,27}$ | 043-0039-00 | Special capacitor (12V 0.1μF) | 3 |
| $C_4$ | 141-1023-11 | Polyester capacitor (50V 0.001μF) | 1 |
| $C_{36,38}$ | 141-1523-11 | Polyester capacitor (50V 0.0015μF) | 2 |
| $C_{11}$ | 141-2223-11 | Polyester capacitor (50V 0.0022μF) | 1 |
| $C_{2,15}$ | 141-3323-11 | Polyester capacitor (50V 0.0033μF) | 2 |
| $C_{29}$ | 141-4723-11 | Polyester capacitor (50V 0.0047μF) | 2 |
| $C^{1,7,9}_{14,30}$ | 141-1033-12 | Polyester capacitor (50V 0.01μF) | 5 |
| $C^{10,20,24}_{28,45,48}$ | 141-3933-13 | Polyester capacitor (50V 0.039μF) | 6 |
| $C_{32}$ | 141-4733-13 | Polyester capacitor (50V 0.047μF) | 1 |
| $C^{16,25}_{3,51}$ | 141-1043-16 | Polyester capacitor (50V 0.1μF) | 4 |
| $C_{12}$ | 143-4712-12 | Polystylen capacior (50V 470PF) | 1 |
| $C_8$ | 144-1212-17 | Mica capacitor (50V 120PF) | 1 |
| $C_6$ | 144-1512-17 | Mica capacitor (50V 150PF) | 1 |
| $C_{44}$ | 160-2222-05 | Ceramic capacitor (50V 0.0022μF) | 1 |
| $C_{50}$ | 163-2045-01 | Ceramic capacitor (50V 0.02μF) | 1 |
| $C_{41}$ | 153-2212-46 | Ceramic capacitor (220PFSL) | 1 |

| REF.NO. | P RART NO. | DESCRIPION | P.C.S |
|---|---|---|---|
| $C_{22}$ | 154-3312-46 | Ceramic capacitor (330PFSL) | 1 |
| $C_{13}$ | 154-6802-31 | Ceramic capacitor (68PFPH) | 1 |
| $C_{26,40}$ | 155-3312-56 | Ceramic capacitor (330PFUH) | 2 |
| $C_{31,35,47}$ | 180-1054-62 | Electrolytic capacitor (50V 1μF) | 3 |
| $C_{19,37}$ | 180-1064-22 | Electrolytic capacitor (10V 10μF) | 2 |
| $C_{18}$ | 180-2264-22 | Electrolytic capacitor (10V 22μF) | 1 |
| $C_{43}$ | 180-3364-22 | Electrolytic capacitor (10V 33μF) | 1 |
| $C_{34,39}$ | 180-1074-22 | Electrolytic capacitor (10V 100μF)) | 2 |
| $R_{36}$ | 110-2211-42 | Solid resistor (½W 220Ω±5%) | 1 |
| $R_{34}$ | 111-1021-31 | Film resistor (¼W 1KΩ±5%) | 1 |
| $R_{33}$ | 111-2721-31 | Film resistor (¼W 2.7KΩ±5%) | 1 |
| $R_{12}$ | 111-2701-32 | Film resistor (¼W 27Ω±5%) | 1 |
| $R_{8,32}$ | 111-1011-32 | Film resistor (¼W 100Ω±5%) | 2 |
| $R_{25}$ | 111-1511-32 | Film resistor (¼W 150Ω±5%) | 1 |
| $R_{26,27,16}$ | 111-2211-32 | Film resistor (¼W 220Ω±5%) | 3 |
| $R_6$ | 111-2711-32 | Film resistor (¼W 270Ω±5%) | 1 |
| $R_{5,18}$ | 111-3311-32 | Film resistor (¼W 330Ω±5%) | 2 |
| $R_{28,35}$ | 111-4711-32 | Film resistor (¼W 470Ω±5%) | 2 |
| $R_{24}$ | 111-5611-32 | Film resistor (¼W 560Ω±5%) | 1 |
| $R_{11}$ | 111-6811-32 | Film resistor (¼W 680Ω±5%) | 1 |
| $R_{37}$ | 111-1021-32 | Film resistor (¼W 1KΩ±5%) | 1 |
| $R_{13}$ | 111-1521-32 | Film resistor (¼W 1.5KΩ±5%) | 1 |
| $R_{9,17}$ | 111-2221-32 | Film resistor (¼W 2.2KΩ±5%) | 2 |
| $R_{4,29}$ | 111-2721-32 | Film resistor (¼W 2.7KΩ±5%) | 2 |
| $R_{7,14,20}$ | 111-3321-32 | Film resistor (¼W 3.3KΩ±5%) | 3 |
| $R_{31}$ | 111-3921-32 | Film resistor (¼W 3.9KΩ±5%) | 1 |
| $R_1$ | 111-4721-32 | Film resistor (¼W 4.7KΩ±5%) | 1 |
| $R_{19}$ | 111-5621-32 | Film resistor (¼W 5.6KΩ±5%) | 1 |
| $R_{21,22}$ | 111-6821-32 | Film resistor (¼W 6.8KΩ±5%) | 2 |
| $R_{2,30}$ | 111-8221-32 | Film resistor (¼W 8.2KΩ±5%) | 2 |
| $R_{10}$ | 111-1031-32 | Film resistor (¼W 10KΩ±5%) | 1 |
| $R_{3,23}$ | 111-2231-32 | Film resistor (¼W 22KΩ±5%) | 2 |
| $R_{15}$ | 111-5631-32 | Film resistor (¼W 56KΩ±5%) | 1 |
| | | | |