Clarion Co., Ltd.
Export Division—3, Kojimachi 5-chome, Chiyoda-ku, Tokyo, 102 Japan Tel: 03-265-2931
Telex: J22908, J22152, J25550 CLARISHO
Service Dept.—50 Kamitoda, Toda-shi, Saitama, 335 Japan Tel: 0484-43-1111 Telex: J2962628 CLAFAC-J

Clarion

Service Manual

Overseas Sales Branch Offices
Clarion Corporation of America 5500 Rosecrans Ave., Lawndale, Calif., 90260 U.S.A. Tel: 213-973-1100 Telex: CLARIONLSA 66-4447
Clarion Corporation of America (Eastern Division) 100 Thirteenth Avenue, Ronkonkoma, New York 11779 U.S.A. Tel: 516-467-1120 Telex: 64-0787
Clarion Shoji (EUROPA) G.m.b.H. Rudolf-Diesel-Strasse 2, 6236 Eschborn 2, West Germany Tel: 06173-61036 Telex: 415414
Clarion (HONG KONG) Co., Ltd. 526, Ocean Centre, Canton Road, Tsimshatsui, Kowloon, Hong Kong Tel: 3-690528 Telex: HX64293 CLAHK
Clarion Canada Inc. 1401 Meyerside Dr. Mississauga, Ontario L5T IG8, Canada Tel: 416-678-1367 Telex: 216968573 CLARION MSGA
Clarion Shoji (U.K.) Ltd. 4-6, Faraday Road, Dorcan Industrial Estate, Dorcan, Swindon, Wiltshire, SN3.5HQ United Kingdom Tel: (0793) 24081 Telex: 44689

MAZDA Automobile Genuine Electronic Tuner

Model RT-9037C

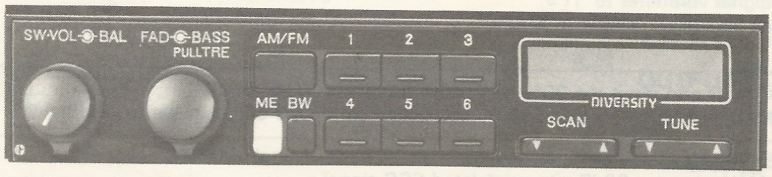

■SPECIFICATIONS:

Circuit system:	Superheterodyne	
Tuning system:	Electronic tuning	
Receive range:	AM	531kHz to 1,602kHz
	FM	87.5MHz to 107.9MHz
Intermediate frequency:		
	AM	450kHz
	FM	10.7MHz
Quieting sensitivity:	AM	Less than 33dB (at 20dB S/N)
	FM	Less than 15dB (at 30dB S/N)
Selectivity:	AM	More than 35dB (at ± 9kHz detune)
Separation:	AM	More than 15dB
	FM	More than 20dB
Fidelity: (Bass, Treble=flat)	AM (NARROW)	100Hz −3±3dB
		1kHz 0dB
		4kHz −14±5dB
	FM	100Hz 1±3dB
		1kHz 0dB
		7kHz −21±5dB

Auto tuning stop sensitivity:		
	AM	DX 27~43dB
	FM	DX 27~39dB
Load impedance:	100Ω	
Output level:	3V±3dB	
Power supply voltage:		
	DC 13.2V (10.8V to 15.6V)	
	Negative ground	
Current consumption:		
	Less than 3A (at max. output)	
Dimensions:	Width	180mm
	Height	35mm
	Depth	160mm
Weight:	950g	

■COMPONENTS:

● **RT-9037C-A**

Main unit 1

■ADJUSTMENTS:

AM

Item	Adjustment	Measuring Instrument
Stop Sensitivity	1) Set the frequency to 999kHz and adjust the stop sensitivity to the specified level: DX — Stop Sensitivity 35dB — Adjustable VOL VR201	SG Milli-volt meter
Decoder Input	1) Connect the milli-volt meter to TP8. (TP9) 2) Set SG to 999kHz, 74dB. 3) Adjust the reading of milli-volt meter to 100mV±5mV by VR1. (inside the tuner pack)	SG Milli-volt meter

FM

Item	Adjustment	Measuring Instrument
0V Adjustment	(MAIN) 1) Connect the digital voltmeter to TP3 and TP4. 2) Input the non-modulated 98.1MHz/55dB signal and adjust the reading of digital voltmeter to 0±20mV by L104. (SUB) 1) Connect the digital voltmeter to TP1 and TP2. 2) Follow the same adjustment steps as MAIN above. (L102)	SG Digital voltmeter
IF Level	(MAIN) 1) Connect the digital voltmeter to TP6. 2) Input the 98.1MHz frequency at 15dB and adjust the level to 0.63±0.1V by VR109. (SUB) 1) Connect the digital voltmeter to TP5. 2) Adjust the level by VR101 similar to MAIN.	SG Digital voltmeter
SASC	1) Set SG to 98.1MHz and input the 30%-modulated frequency 7kHz, 65dB. 2) Adjust the SASC outputs evenly to −1dB by VR104 when the SG output is set to 40dB.	SG Milli-volt meter
Stop Sensitivity	1) Tuner at 98.1MHz, input a 33dB non-modulated SSG signal. 2) Adjust VR103 so that the voltage of the TP7 is less than 0.5V.	SG Milli-volt meter

● ADJUSTMENT POINT

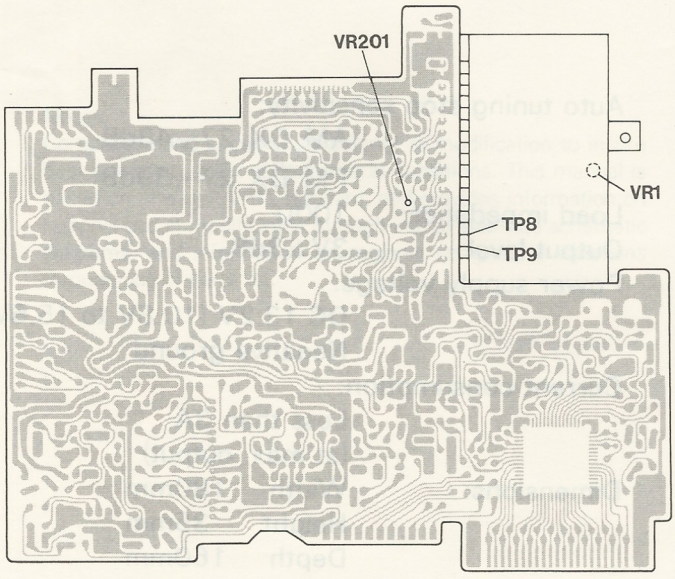

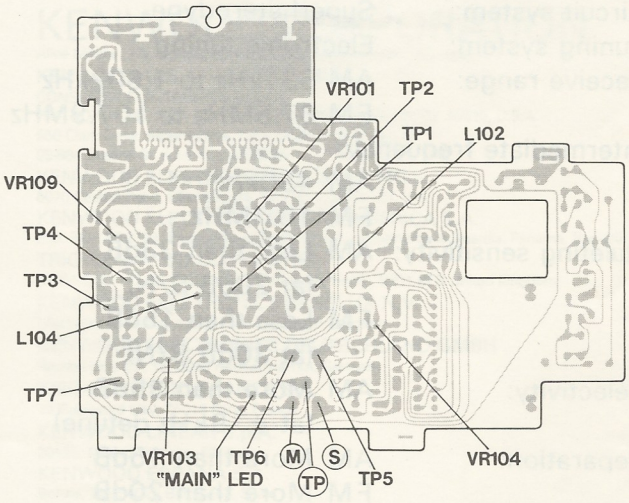

MAIN CHANNEL/SUB CHANNEL switching

(1) It can be switched to the main channel by shorting TP & M (Main channel LED is lit)

(2) It can be switched to the sub channel by shorting TP & S

■EXPLANATION OF IC's:

■CZ2-GATE-IC 051-0651-00 External Disturbance Pulse Noise Rejection Gate (For AM Receiver)

Outward Form

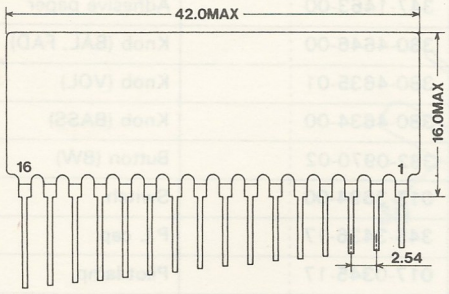

Block Diagram

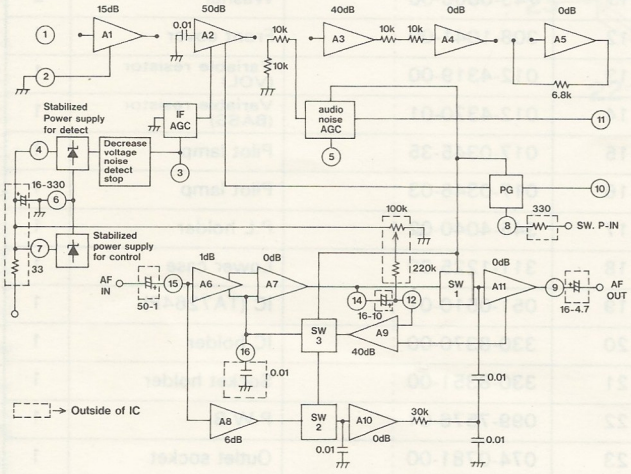

Maximum Ratings

Item	Symbol	Rating	Unit
Power dissipation	Pt	850	mW
Operating temperature	Top	−30~+70	°C

Electrical Characteristics (Vcc=12V, Ta=25°C)

Item	Symbol	Condition	MIN.	TYP.	MAX.	Unit
Operating voltage	Vcc		8.1	12.0	15.0	V
Current drain	Icc	Zero signal	25	37	48	mA
Gate Section						
Voltage gain	Gvg	f=400Hz, R_L=5.6kΩ	−2.5	0	+2.5	dB
Input impedance	Zig	f=400Hz	–	48.8	–	kΩ
Output impedance	Zog	f=400Hz	–	0.1	1.0	kΩ
Total harmonic distortion	THD	f=400Hz, R_L=5.6kΩ Vo=400mV	–	0.2	0.6	%
Switching noise	Nsw	T=10mS, PW=0.3mS	–	−70	−60	dB
Noise rejection level	Nr	T=10mS, PW=0.3mS	–	–	−58	dB

■TK15021 051-0772-00 Analog Switch

Outward Form

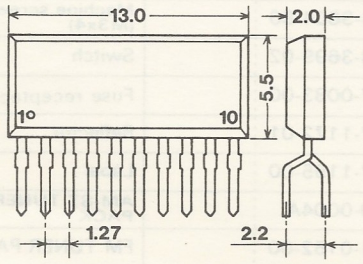

Maximum Ratings (Ta=25°C)

Item	Symbol	Rating	Unit
Supply voltage	Vcc	24	V
Power dissipation	P_D	450	mW
Input voltage	Vin	−0.3~Vcc+0.3	V
Output current	Isout	3	mA
Operating voltage	Vop	3~20	V

Electrical Characteristics (Ta=25°C, Vcc=20V)

Item	Symbol	Condition	MIN.	TYP.	MAX.	Unit
Supply current	Icc			3.5	7.0	mA
"L" Input level	VILC		−0.3		0.8	V
"H" Input level	VIHC	at control terminal open, Voltage 1.8V	2.3		Vcc+0.3	V
Total harmonic distortion	THD	VSIN=1V(RMS), F=1kHz RL=10kΩ		0.005	0.01	%
Residual noise	NL	RL=10kΩ, input terminal is GND with 10μF			10	μV(RMS)
Crosstalk	CRSS	VSIN=1V(RMS), F=10kHz RL=10kΩ	−64	−74		dB
Dynamic range	DYN	THD=0.1%, RL=10kΩ F=1kHz	4.5			V(RMS)
I/O terminal voltage	VCENT	at non-input		Vcc/2		V
DC middle point voltage (between channels)	ΔVCENT	Vcc=9V	−50		+50	mV
Voltage gain	VG			0		dB

Terminal Connection

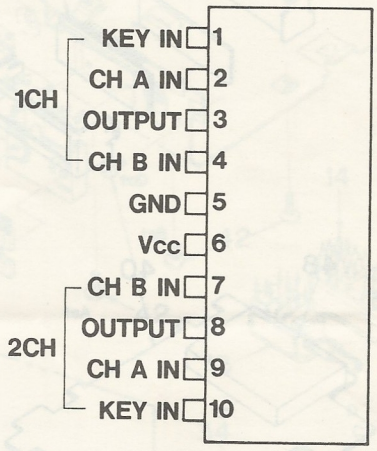

Block Diagram

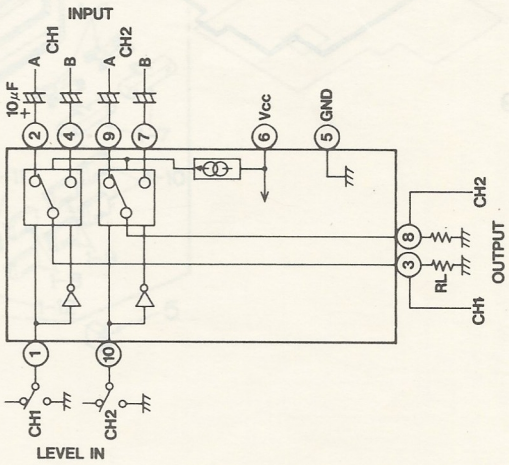

■NJM2073D 051-0774-00 Dual Low Voltage Power Amp.

Outward Form

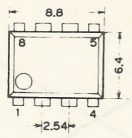

Block Diagram

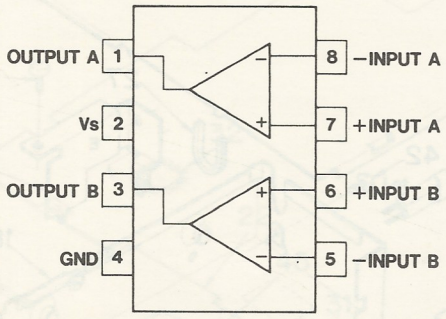

Maximum Ratings (Ta=25°C)

Item	Symbol	Rating	Unit
Supply voltage	V^+	15	V
Output peak current	Iop	1	A
Power dissipation	P_D	700	mW
Operating temperature	Topr	−20~75	°C

Electrical Characteristics (Stereo operation) Ta=25°C, V^+=6V

Item	Symbol	Condition	Min.	Typ.	Max.	Unit
Supply voltage	V^+		1.8	–	15	V
Output voltage	Vo		–	2.7	–	V
Input bias current	I_{IB}		–	100	–	nA
Output power	Po	THD=10%, f=1kHz V^+=4.5V, R_L=4Ω	–	0.37	–	W
Total harmonic distortion	THD	Po=1W, R_L=4Ω, f=1kHz	–	0.25	–	%
Close loop voltage gain	Gv	f=1kHz	40	44	–	dB
Input resistance	R_{IN}	f=1kHz	100	–	–	kΩ
Input noise voltage	V_{N11}	Rs=10kΩ, A curve	–	2.5	–	μV
	V_{N12}	Rs=10kΩ, B=22Hz~22kHz	–	3	–	μV
Supply voltage rejection ratio	SVRR	f=100Hz, Cx=100μF	24	30	–	dB
Power band width	P.B.	R_L=8Ω, Po=250mW	–	200	–	kHz

Stereo Operation

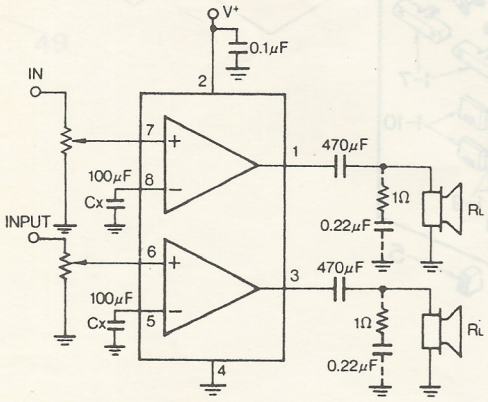

Stereo operation

■EXPLODED VIEW • PARTS LIST:

◎Main section

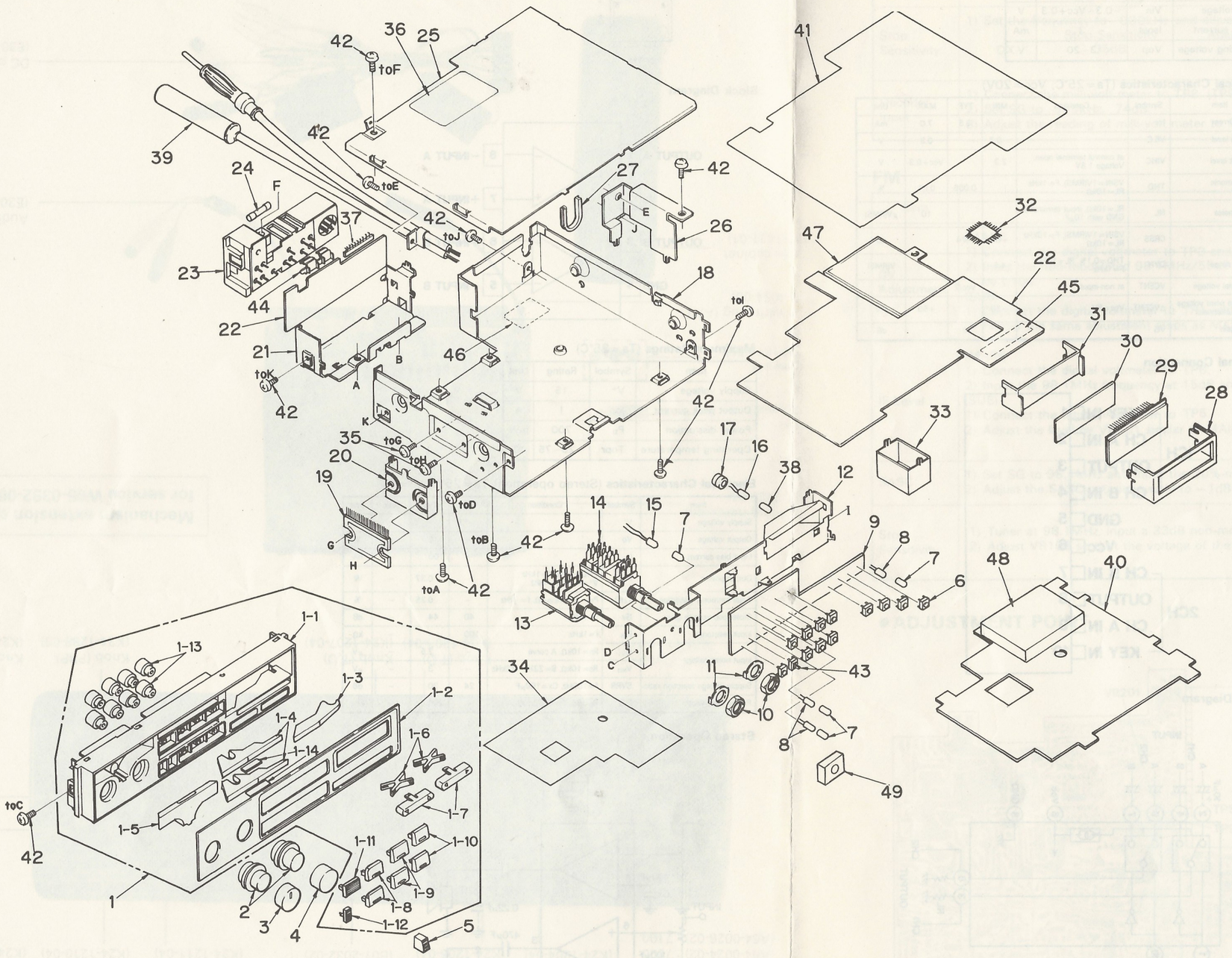

REF.NO.	PART NO. (ORDER NO.)	DESCRIPTION	Q'TY
1	940-0548A	Escutcheon ass'y	1
1-1	370-3885-00	Escutcheon	1
1-2	371-3321-00	Trim plate	1
1-3	335-1960-02	Reflector	1
1-4	335-1961-04	Reflector	2
1-5	335-1962-02	Reflector	1

REF.NO.	PART NO. (ORDER NO.)	DESCRIPTION	Q'TY
1-6	345-4038-01	Spacer	2
1-7	382-0923-03	Button (TUNE, SCAN)	2
1-8	382-0920-00	Button (1, 4)	2
1-9	382-0921-00	Button (2, 5)	2
1-10	382-0922-00	Button (3, 6)	2
1-11	382-0919-01	Button (AM/FM)	1

REF.NO.	PART NO. (ORDER NO.)	DESCRIPTION	Q'TY
1-12	382-0971-01	Button (MEMO)	1
1-13	345-4039-02	Spacer	8
1-14	347-1463-00	Adhesive paper	2
2	380-4646-00	Knob (BAL, FAD)	2
3	380-4635-01	Knob (VOL)	1
4	380-4634-00	Knob (BASS)	1
5	382-0970-02	Button (BW)	1
6	013-3694-00	Switch	12
7	345-3436-17	P.L cap	4
8	017-0345-17	Pilot lamp	3
9	099-7578-00	P.W.B	1
10	722-0231-00	Nut	2
11	745-0668-00	Washer	2
12	308-1041-00	Front cover	1
13	012-4319-00	Variable resistor (VOL)	1
14	012-4320-01	Variable resistor (BASS)	1
15	017-0345-35	Pilot lamp	1
16	017-0346-03	Pilot lamp	1
17	345-4040-02	P.L holder	1
18	311-1225-00	Lower case	1
19	051-0510-01	IC (TA7264P)	1
20	330-8370-00	IC holder	1
21	330-8351-00	Socket holder	1
22	099-7576-01	P.W.B	1
23	074-0781-00	Outlet socket	1
24	120-0030-02	Fuse (3A)	1
25	303-0330-01	Upper cover	1
26	330-8371-01	Bracket	1
27	345-4191-00	Lead holder	1
28	335-1963-01	LCD cover	1
29	379-0082-00	Indicator	1
30	335-1964-01	Reflector	1
31	335-1965-00	LCD holder	1
32	051-0713-00	IC (μPD1708G)	1
33	330-8372-00	Shield case	1
34	347-1939-00	Insulator	1
35	714-3010-80	Machine screw (M3x10)	2
36	286-5770-00	Set plate	1
37	076-0288-10	Plug	1
38	345-3842-01	P.L cap	1
39	092-0591-01	Antenna receptacle	1
40	099-7577-00	P.W.B	1
41	347-1938-02	Insulator	1
42	714-3004-80	Machine screw (M3x4)	12
43	013-3699-02	Switch	1
44	077-0083-00	Fuse receptacle	2
45	347-1172-01	Reflector	1
46	347-1195-00	Label	1
47	880-0004A	AM-ST TUNER PACK	1
48	941-0152-00	FM TUNER PACK	1
49	345-3904-00	Shade	1

■PARTS LIST:

◎Electrical section

◎MAIN P.W.B

REF.NO.	PART NO. (ORDER NO.)	DESCRIPTION	Q'TY
$D_{811\sim813,901,908,911,912}^{802\sim809}$	001-0330-00	Diode (1SS119)	15
$D_{907}^{902,903,904,905}$	001-0360-00	Diode (S5566B)	5
D_{810}	001-0423-19	Diode (MA4056)	1
$D_{201,202,801,906}$	001-0423-24	Diode (MA4091)	4
L_{902}	009-0470-02	Choke	1
L_{901}	009-0621-00	Choke	1
L_{202}	010-2052-00	Coil	1
VR_{201}	012-4100-00	Variable resistor (10kΩ)	1
VR_{202}	012-4100-06	Variable resistor (50kΩ VR)	1
$VR_{203,204}$	012-4100-07	Variable resistor (100kΩ VR)	2
CCT_{801}	050-0093-03	Component circuit	1
IC_{201}	051-0190-00	IC (C-Z2)	1
IC_{504}	051-0510-01	IC (TA7264P)	1
IC_{501}	051-0606-00	IC (BT3S501)	1
IC_{202}	051-0651-00	IC (CZ2-GATE-IC)	1
IC_{801}	051-0713-00	IC (μPD1708G-017-00)	1
IC_{502}	051-0772-00	IC (TK15021)	1
IC_{503}	051-0774-00	IC (NJM2073D)	1
X_{801}	061-1037-00	Crystal	1
Q_{802}	100-1048-50	Transistor (2SA1048)	1
Q_{801}	102-1545-00	Transistor (2SC1545B)	1
$Q_{903}^{204,205,301,401,803,804,805,807}$	102-2458-50	Transistor (2SC2458Y,GR,BL)	9
$Q_{905,906,907}^{206,207,901,902}$	103-1225-50	Transistor (2SD1225M)	7
$Q_{501,502}$	103-1504-05	Transistor (2SD1504-E)	2
$Q_{806,909}$	125-0003-03	Transistor (RN2203)	2
Q_{904}	125-2003-02	Transistor (RN1202)	1
Q_{203}	125-2003-03	Transistor (RN1203)	1
Q_{202}	125-2003-06	Transistor (RN1206)	1
R_{912}	114-1201-11	Film resistor (1W12Ω) OM	1
$R_{903,905}$	114-3311-11	Film resistor (1W330Ω) OM	2
$C_{606,706,881}$	160-1522-05	Ceramic capacitor (1500pF) HD	3

REF.NO.	PART NO. (ORDER NO.)	DESCRIPTION	Q'TY
$C_{610,710}$	160-8212-05	Ceramic capacitor (820pF) HD	2
$C_{208,212}$	171-1033-06	Ceramic capacitor (0.01μF) SC	2
C_{206}	171-3323-06	Ceramic capacitor (3300pF) SC	1
$C_{806,807}$	174-2200-13	Ceramic capacitor (22pF CH) TC	2
C_{205}	174-3900-13	Ceramic capacitor (39pF CH) TC	1
$C_{144,803,808,812}$	173-1032-10	Polyester capacitor (0.01μF) S	4
$C_{915,918}^{202,802,908,913}$	173-1042-10	Polyester capacitor (0.1μF) S	6
$C_{203,204}$	173-2232-10	Polyester capacitor (0.022μF) S	2
$C_{507,508}$	173-2242-10	Polyester capacitor (0.22μF) S	2
$C_{216,217}$	173-5632-10	Polyester capacitor (0.056μF) S	2
$C_{218,219}$	173-6832-10	Polyester capacitor (0.068μF) S	2
C_{207}	042-0174-00	Electrolytic capacitor (16V4.7μF TAN)	1
C_{211}	042-0176-00	Electrolytic capacitor (16V10μF TAN)	1
C_{917}	179-1073-33	Electrolytic capacitor (16V100μF) S	1
$C_{909,910}$	179-1083-33	Electrolytic capacitor (16V1000μF) S	2
C_{810}	179-2273-22	Electrolytic capacitor (10V220μF) S	1
C_{912}	179-3363-32	Electrolytic capacitor (16V33μF) S	1
C_{903}	179-3373-33	Electrolytic capacitor (16V330μF) S	1
$C_{613,614}$	179-4753-62	Electrolytic capacitor (50V4.7μF) S	2
$C_{506,611,711}$	179-4763-22	Electrolytic capacitor (10V47μF) S	3
C_{919}	179-4773-33	Electrolytic capacitor (16V470μF) S	1
$C_{609,702,703,704,705,709,804,809}^{602,603,604,605}$	182-1053-62	Electrolytic capacitor (50V1μF) SS	12
$C_{214,215}$	182-1056-62	Electrolytic capacitor (50V1μF NP) SS	2
$C_{302,402,503,601,608,701,708}^{210,213,220,221}$	182-1063-32	Electrolytic capacitor (16V10μF) SS	11
$C_{607,612,707,712}^{222,223,509,510}$	182-1073-22	Electrolytic capacitor (10V100μF) SS	8
$C_{907}^{902,904,905,906}$	182-1073-32	Electrolytic capacitor (16V100μF) SS	5
$C_{301,401}$	182-2253-62	Electrolytic capacitor (50V2.2μF) SS	2
$C_{505,914}$	182-2263-32	Electrolytic capacitor (16V22μF) SS	2
C_{805}	182-3363-22	Electrolytic capacitor (10V33μF) SS	1
$C_{901,911,916}^{501,502,504,811}$	182-3363-52	Electrolytic capacitor (35V33μF) SS	7
C_{209}	182-4763-32	Electrolytic capacitor (16V47μF) SS	1

◎FM P.W.B

REF.NO.	PART NO. (ORDER NO.)	DESCRIPTION	Q'TY
$D_{101,102,909,910}$	001-0330-00	Diode (1SS119)	4
D_{104}	001-0366-00	Diode (LTZ-MR15T)	1
$D_{1,2}$	001-0365-00	Diode (ERZ-D03DK331 ZNR)	2
D_{103}	001-0421-24	Diode (MA4091)	1
$IFT_{101,102}$	005-0764-00	IF-transformer (MS3)	2
L_{106}	010-2046-17	Coil (VT)	1
L_{101}	010-2046-26	Coil (F-END)	1
$L_{103,105}$	010-2046-36	Coil (IF)	2
L_{201}	010-2053-00	Coil (AM-ANT)	1
$L_{102,104}$	010-2092-00	Coil (IF-DET)	2
$VR_{101,109}$	012-3808-01	Variable resistor (IF-IN)	2
VR_{104}	012-3808-08	Variable resistor (SASC)	1
VR_{103}	012-3808-10	Variable resistor (SD)	1
$PL_{1,7}$	017-0321-01	Pilot lamp (NEON)	2

REF.NO.	PART NO. (ORDER NO.)	DESCRIPTION	Q'TY
IC_{104}	051-0285-54	IC (NJM2904S)	1
$IC_{101,102}$	051-0488-03	IC (μPC1245)	2
IC_{103}	051-0541-00	IC (DIV)	1
IC_{105}	051-0632-01	IC (MPX-NC-H)	1
Q_{102}	102-2458-00	Transistor (2SC2458)	1
Q_{103}	102-3420-27	Transistor (2SC3420-BL)	1
Q_{908}	125-0003-03	Transistor (RN2203)	1
Q_{101}	125-2003-06	Transistor (RN1206)	1
$C_{115,130}$	160-3312-05	Ceramic capacitor (330pF) HD	2
C_{143}	160-5622-05	Ceramic capacitor (0.0056μF) HD	1
$C_{199}^{114,129,132,136}$	171-1023-06	Ceramic capacitor (1000pF) SC	5
$C_{110,112,117,118,124,125,127}^{102,103,106,109}$	171-2233-06	Ceramic capacitor (0.022μF) SC	11
C_{142}	171-3323-06	Ceramic capacitor (0.0033μF) SC	1
$C_{105,120}$	174-1000-13	Ceramic capacitor (10pF CH) TC	2

REF.NO.	PART NO. (ORDER NO.)	DESCRIPTION	Q'TY
C_{201}	174-2200-13	Ceramic capacitor (22pF CH) TC	1
$C_{104,119}$	174-4700-37	Ceramic capacitor (47pF RH) TC	2
C_{151}	173-1021-10	Polyester capacitor (0.001μF) S	1
$C_{101,148,149}$	173-1041-10	Polyester capacitor (0.1μF) S	3
C_{152}	173-6821-10	Polyester capacitor (0.0068μF) S	1
C_{145}	179-2273-31	Electrolytic capacitor (16V220μF) S	1
C_{154}	179-3373-32	Electrolytic capacitor (16V330μF) S	1
$C^{108,111,123,126}_{133,134,922,923}$	182-1053-62	Electrolytic capacitor (50V1μF) SS	8

REF.NO.	PART NO. (ORDER NO.)	DESCRIPTION	Q'TY
$C^{116,131,137,141}_{920}$	182-1063-32	Electrolytic capacitor (16V10μF) SS	5
$C_{113,138,139,153}$	182-2263-22	Electrolytic capacitor (10V22μF) SS	4
$C_{107,122,146,147}$	182-4743-62	Electrolytic capacitor (50V0.47μF) SS	4
C_{921}	182-4753-52	Electrolytic capacitor (35V4.7μF) SS	1
C_{135}	182-4763-02	Electrolytic capacitor (4V47μF) SS	1
$C_{140,150}$	182-4763-22	Electrolytic capacitor (10V47μF) SS	2
C_{128}	183-2263-32	Electrolytic capacitor (16V22μF) USS	1

Note : OM (Oxidized Metal)
S (Small)
HD (Higher Dielectric)
SC (Semi-Conductor)
SS (Super Small)
TC (Temperature-Compensating)
LL (Low Leak)
USS (Ultra Super Small)

● How to read resistor

Resistors are deleted from the table of electric components, (except metal film resistors and special resistors). They can be converted to product Nos. as follows.

Film resistor (Carbon film resistor)

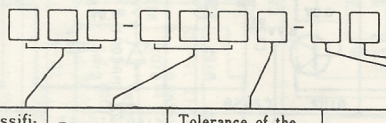

Classification	Resistance *	Tolerance of the value of resistance		Rated power			Shape	
		0		0			0	
	Example	1	± 5 %	1	⅛W	Approx. 3.7mm	1	Horizontal
	33Ω=330	2		2	¼Ws	Approx. 6.5mm	2	Vertical
1 1 1	33kΩ=333	3		3			3	
		4		4	½W	Approx. 9mm	4	
				7	⅙W	Approx. 3.5mm		
				8	½Ws	Approx. 6.6mm		
				9	¼Wss	Approx. 3.2mm		

(Example)

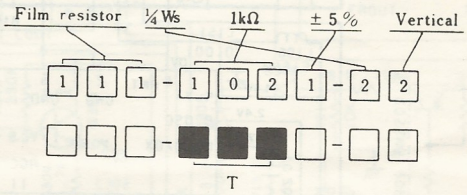

Note 1. The first two of three digits representing resistance are effective digits and the last one represents number of "0" following this.
Unit is given in ohm (Ω).

Example of conversion of resistance ■■■□ (T)

Note) R : Resistance, T : Converted value

R	T	R	T	R	T	R	T	R	T	R	T	R	T	R	T	R	T	R	T
Ω 0.1	108	Ω 1.0	109	Ω 10	100	Ω 100	101	kΩ 1.0	102	kΩ 10	103	kΩ 100	104	MΩ 1.0	105	MΩ 10	106	MΩ 100	107
0.15	158	1.5	159	15	150	150	151	1.5	152	15	153	150	154	1.5	155	15	156	150	157

COLOR	BLK	BRN	RED	ORG	YEL	GRN	BLU	PUR	GRY	WHT	GOLD	SILVER	NO COLOR
1st color band	0	1	2	3	4	5	6	7	8	9			
2nd color band	0	1	2	3	4	5	6	7	8	9			
3rd color band	10^0	10^1	10^2	10^3	10^4	10^5	10^6				10^{-1}	10^{-2}	
4th color band											± 5 % (J)	± 10% (K)	± 20% (M)

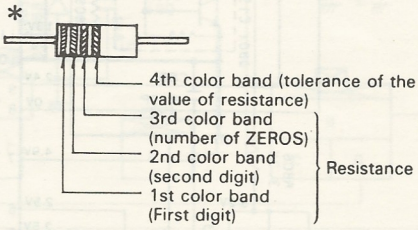

■CIRCUIT DIAGRAM:

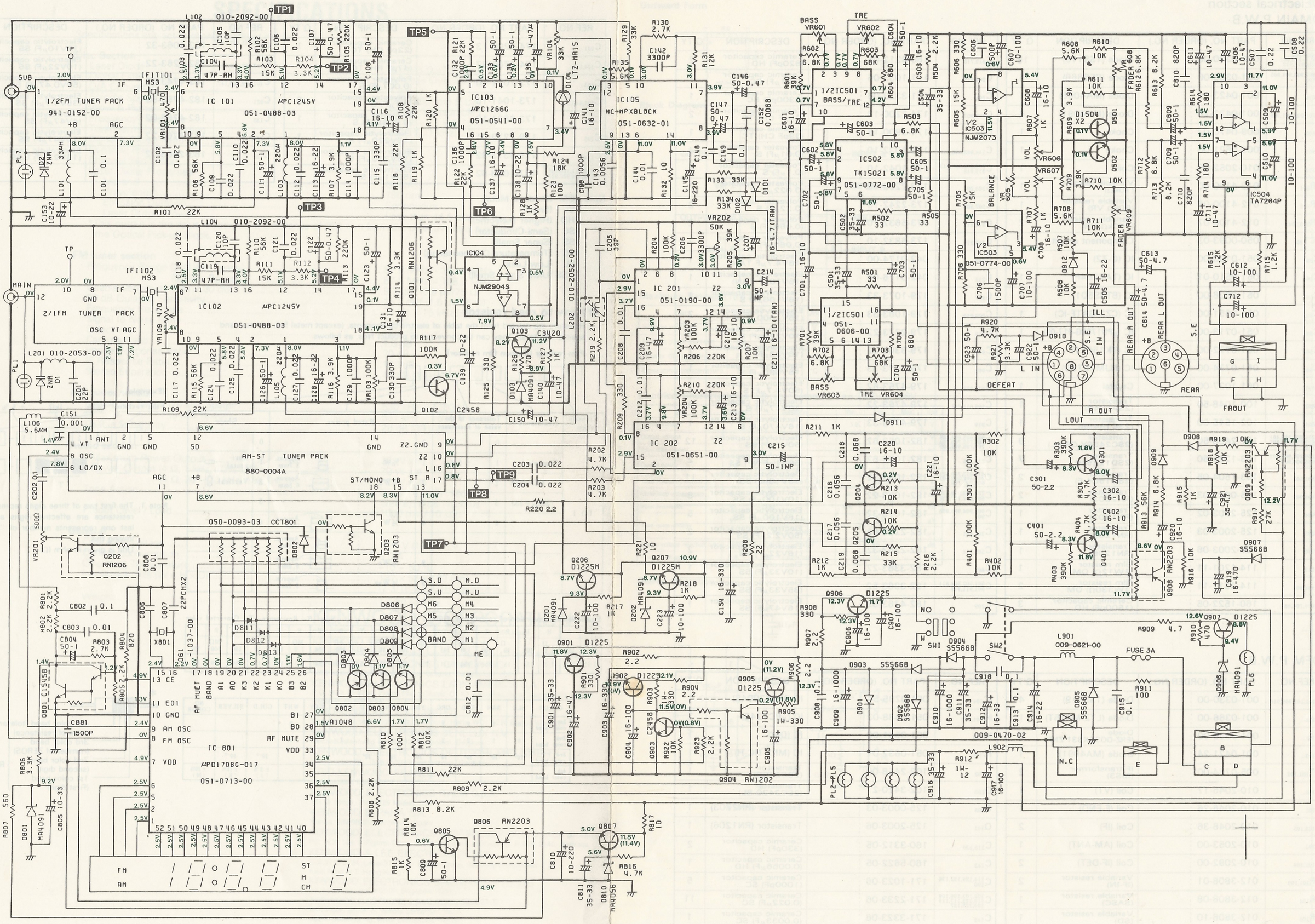

EUROPEAN TUNER.
1 - ANT
2 - LO/DX
3 - VCC
4 - TV
5 - IF.
6 - OSC

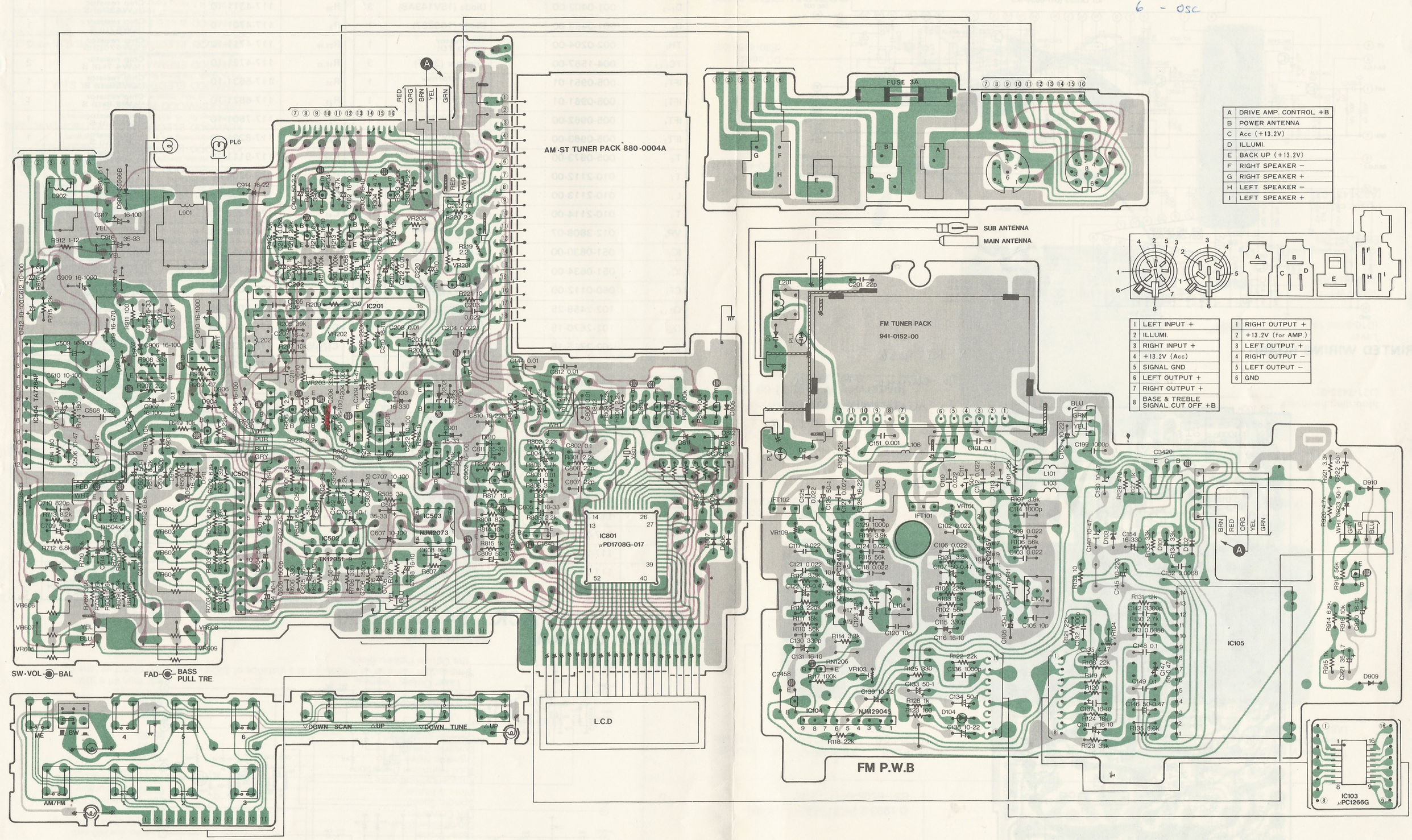

A	DRIVE AMP. CONTROL +B
B	POWER ANTENNA
C	Acc (+13.2V)
D	ILLUMI.
E	BACK UP (+13.2V)
F	RIGHT SPEAKER −
G	RIGHT SPEAKER +
H	LEFT SPEAKER −
I	LEFT SPEAKER +

1	LEFT INPUT +
2	ILLUMI.
3	RIGHT INPUT +
4	+13.2V (Acc)
5	SIGNAL GND
6	LEFT OUTPUT +
7	RIGHT OUTPUT +
8	BASE & TREBLE SIGNAL CUT OFF +B

1	RIGHT OUTPUT +
2	+13.2V (for AMP.)
3	LEFT OUTPUT +
4	RIGHT OUTPUT −
5	LEFT OUTPUT −
6	GND

NO AM -
CHECK R904 2.2Ω
(HIDDEN UNDER CAP)

■AM-ST TUNER PACK: 880-0004A

■CIRCUIT DIAGRAM

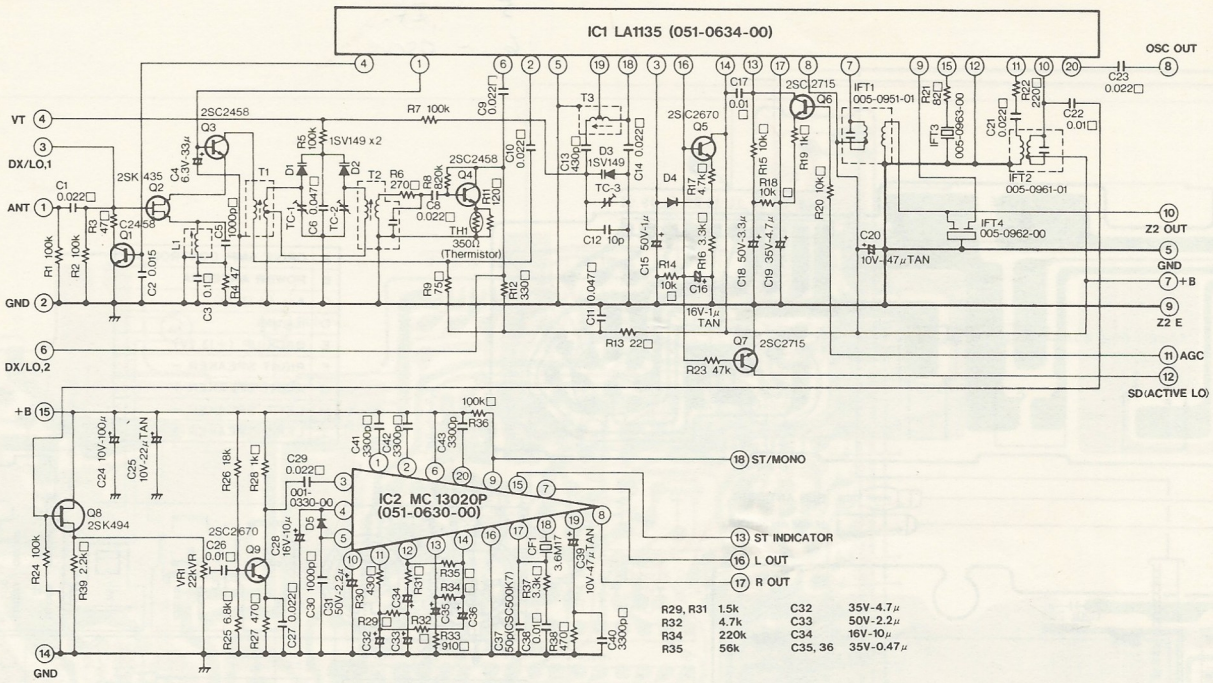

■PRINTED WIRING BOARD

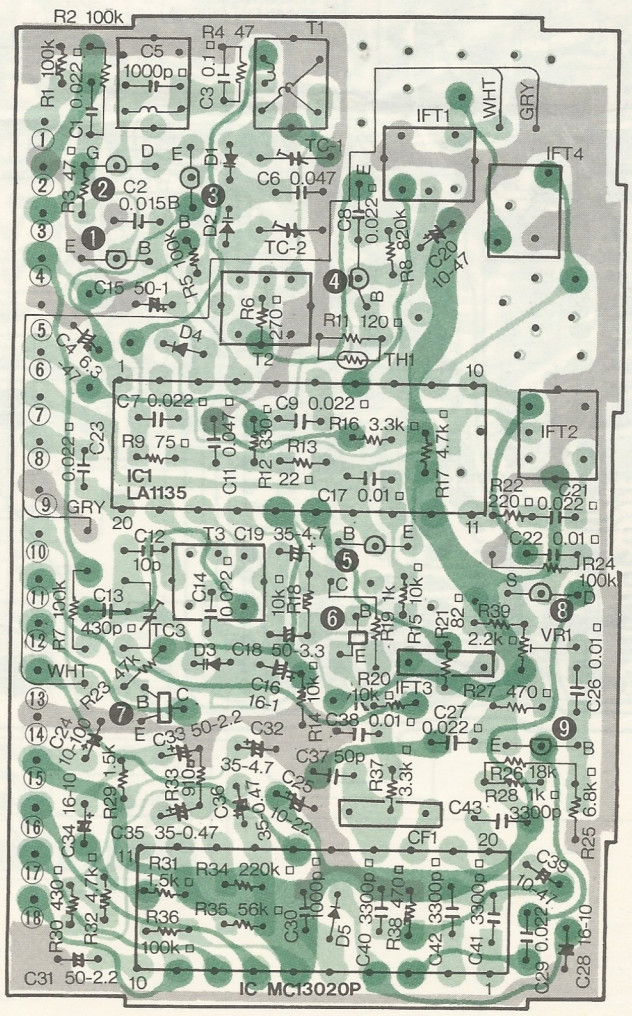

* RT 9036
To change FM FREQ
to AUST TYPE -
ADD 1 Diode & change
1 diode
D811, 812
(hear processor)

■ELECTRICAL SECTION PARTS LIST

REF.NO.	PART NO. (ORDER NO.)	DESCRIPTION	Q'TY
D_5	001-0330-00	Diode (1SS-119)	1
$D_{1\sim3}$	001-0402-00	Diode (1SV149AB)	3
D_4	001-0453-00	Diode (1SS237)	1
TH_1	002-0204-00	Thermistor (350Ω TD)	1
$TC_{1,2,3}$	004-1567-00	Trimmer (20pF)	3
IFT_1	005-0951-01	IF-transformer (IFT-1)	1
IFT_2	005-0961-01	IF-transformer (IFT-2)	1
IFT_4	005-0962-00	IF-transformer (10A)	1
IFT_3	005-0963-00	IF-transformer (BFU-450)	1
T_2	005-0973-00	IF-transformer (T-2 2ND)	1
T_1	010-2112-00	Coil (T-1 1ST)	1
L_1	010-2113-00	Coil (L-1 5μH)	1
T_3	010-2114-00	Coil (T-3 OSC)	1
VR_1	012-3808-07	Variable resistor (22kΩ)	1
IC_2	051-0630-00	IC (MC13020P)	1
IC_1	051-0634-00	IC (LA1135)	1
CF_1	060-0112-00	Ceramic resonator (CSA3-6M17)	1
$Q_{1,3,4}$	102-2458-25	Transistor (2SC2458Y)	3
$Q_{5,9}$	102-2670-15	Transistor (2SC26700)	2
$Q_{6,7}$	102-2715-15	Transistor (2SC2715-O)	2
Q_2	108-0435-51	FET (2SK435-CD)	1
Q_8	108-0494-02	FET (2SK494B)	1
R_{28}	117-1021-10	Chip resistor (1/16W1kΩ) S	1
$R_{14,15,18,20}$	117-1031-10	Chip resistor (1/16W10kΩ) S	4
R_{36}	117-1041-10	Chip resistor (1/16W100kΩ) S	1
R_{11}	117-1211-10	Chip resistor (1/16W120Ω) S	1
$R_{29,31}$	117-1521-10	Chip resistor (1/16W1.5kΩ) S	2
R_{13}	117-2201-10	Chip resistor (1/16W22Ω) S	1
R_{22}	117-2211-10	Chip resistor (1/16W220Ω) S	1
R_{39}	117-2221-10	Chip resistor (1/16W2.2kΩ) S	1
R_{34}	117-2241-10	Chip resistor (1/16W220kΩ) S	1
R_6	117-2711-10	Chip resistor (1/16W270Ω) S	1
R_{12}	117-3311-10	Chip resistor (1/16W330Ω) S	1

REF.NO.	PART NO. (ORDER NO.)	DESCRIPTION	Q'TY
$R_{16,37}$	117-3321-10	Chip resistor (1/16W3.3kΩ) S	2
R_{30}	117-4311-10	Chip resistor (1/16W430Ω) S	1
R_3	117-4701-10	Chip resistor (1/16W47Ω) S	1
$R_{27,38}$	117-4711-10	Chip resistor (1/16W470Ω) S	2
$R_{17,32}$	117-4721-10	Chip resistor (1/16W4.7kΩ) S	2
R_{35}	117-5631-10	Chip resistor (1/16W56kΩ) S	1
R_{25}	117-6821-10	Chip resistor (1/16W6.8kΩ) S	1
R_9	117-7501-10	Chip resistor (1/16W75Ω) S	1
R_{21}	117-8201-10	Chip resistor (1/16W82Ω) S	1
R_{33}	117-9111-10	Chip resistor (1/16W910Ω) S	1
C_{37}	043-0204-00	Ceramic capacitor (50p)	1
C_2	171-1533-06	Ceramic capacitor (0.015μF) SC	1
C_{43}	173-3322-10	Ceramic capacitor (0.0033μF) S	1
C_{12}	174-1000-13	Ceramic capacitor (10pF CH) TC	1
C_{13}	176-4311-00	Ceramic chip capacitor (430pF CH) TC,S	1
C_{11}	177-4732-05	Ceramic chip capacitor (0.047μF) HD	1
$C_{5,30}$	178-1022-05	Ceramic chip capacitor (1000pF) HD,S	2
$C_{17,22,26,38}$	178-1032-05	Ceramic chip capacitor (0.01μF) HD,S	4
C_3	178-1045-06	Ceramic chip capacitor (0.1μF) HD,S	1
$C_{1,8,9,10,14,21,23,27,29}$	178-2232-05	Ceramic chip capacitor (0.022μF) HD,S	9
$C_{40,41,42}$	178-3322-05	Ceramic chip capacitor (0.0033μF) HD,S	3
C_6	178-4735-06	Ceramic chip capacitor (0.047μF) HD,S	1
C_{25}	042-0199-00	Electrolytic capacitor (10V22μF TAN)	1
$C_{20,39}$	042-0200-00	Electrolytic capacitor (10V47μF TAN)	2
$C_{35,36}$	042-0230-00	Electrolytic capacitor (35V0.47μF TAN)	2
C_{16}	042-0239-00	Electrolytic capacitor (16V1μF TAN)	1
C_{15}	182-1053-62	Electrolytic capacitor (50V1μF) SS	1
$C_{28,34}$	182-1063-32	Electrolytic capacitor (16V10μF) SS	2
C_{24}	182-1073-22	Electrolytic capacitor (10V100μF) SS	1
$C_{31,33}$	182-2253-62	Electrolytic capacitor (50V2.2μF) SS	2
C_{18}	182-3353-62	Electrolytic capacitor (50V3.3μF) SS	1
C_4	182-3363-12	Electrolytic capacitor (6.3V33μF) SS	1
$C_{19,32}$	182-4753-52	Electrolytic capacitor (35V4.7μF) SS	2

■FM TUNER PACK: 941-0152-00

■CIRCUIT DIAGRAM

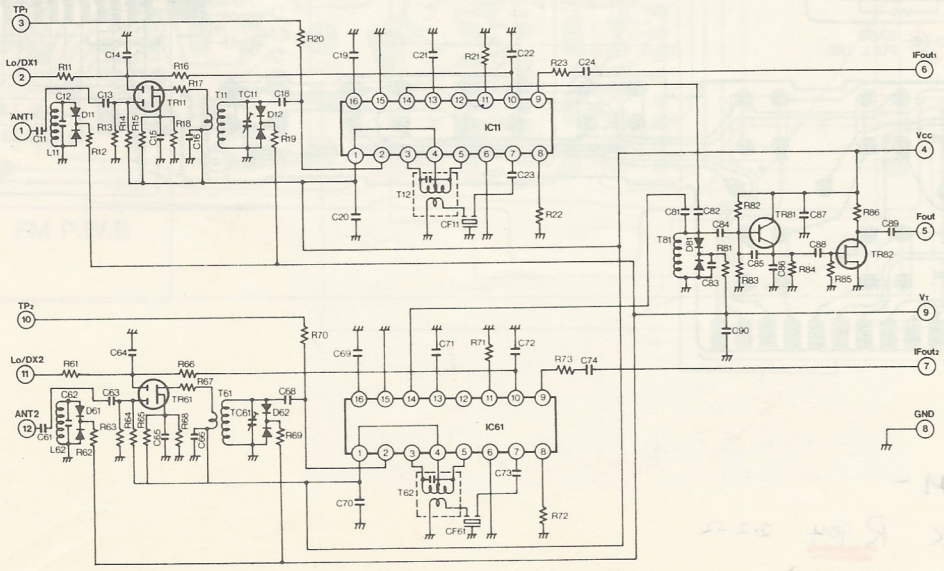

Printed in Japan 298-3356-00 OCT. 1985 ©