RADIO RECORDER RR260

Service
Service
Service

Service Manual

SPECIFICATIONS

Power source:	DC: 6V (4x UM-2 or "C" cell) AC: 240V. 50Hz
Current consumption (DC):	No signal: 30mA D.C. (Radio) 190 mA D.C. (Tape) Max. output: 500 mA D.C.
Tuning range:	AM 520 - 1630 kHz FM 88 - 108 MHz
I.F. frequency:	AM 455 kHz FM 10.7 MHz
Max. sensitivity:	AM 300 uV (50 db) FM 100 uV (20 db)
No. of tracks:	2
Tape speed	4.75 cm/sec.
Frequency response:	150 - 6000 Hz (normal tape) 150 - 8000 Hz (CrO_2)
Output power:	1.0 watt max. (8 ohm)

ACCESS FOR SERVICE

1. **Case-back removal.** Release 4 screws securing the back and lift off.
2. **Tuner P.C.B. assembly.** Release 3 anodised (red) Phillips pan-head screws — 1 above ferrite aerial and 2 at lower corners of P.C.B. Unsolder leads, as required, for servicing access.
3. **Amplifier P.C.B. assembly** Release 2 anodised (red) Phillips pan head screws. Unsolder leads, as required, for servicing access.
4. **Cassette mechanism and Amp. P.C.B.** Release 2 countersunk screws in battery compartment. Remove knobs from Vol. and Tone controls. Lift rear of assembly clear of rear of case and remove assembly. Unsolder leads, as required, for servicing access.

Re-assemble in reverse order, in all cases.

RADIO RECORDER RR260

Service
Service
Service

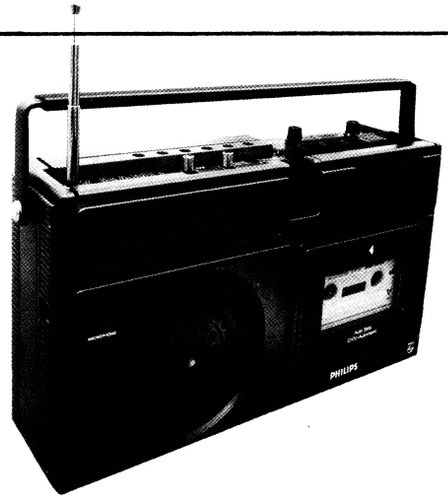

Service Manual

SPECIFICATIONS

Power source:	DC: 6V (4x UM-2 or "C" cell) AC: 240V. 50Hz
Current consumption (DC):	No signal: 30mA D.C. (Radio) 190 mA D.C. (Tape) Max. output: 500 mA D.C.
Tuning range:	AM 520 - 1630 kHz FM 88 - 108 MHz
I.F. frequency:	AM 455 kHz FM 10.7 MHz
Max. sensitivity:	AM 300 uV (50 db) FM 100 uV (20 db)
No. of tracks:	2
Tape speed	4.75 cm/sec.
Frequency response:	150 - 6000 Hz (normal tape) 150 - 8000 Hz (CrO_2)
Output power:	1.0 watt max. (8 ohm)

ACCESS FOR SERVICE

1. **Case-back removal.** Release 4 screws securing the back and lift off.
2. **Tuner P.C.B. assembly.** Release 3 anodised (red) Phillips pan-head screws — 1 above ferrite aerial and 2 at lower corners of P.C.B. Unsolder leads, as required, for servicing access.
3. **Amplifier P.C.B. assembly** Release 2 anodised (red) Phillips pan head screws. Unsolder leads, as required, for servicing access.
4. **Cassette mechanism and Amp. P.C.B.** Release 2 countersunk screws in battery compartment. Remove knobs from Vol. and Tone controls. Lift rear of assembly clear of rear of case and remove assembly. Unsolder leads, as required, for servicing access.

Re-assemble in reverse order, in all cases.

ALIGNMENT

Power source: 6V D.C.

Output measurement: Across speaker terminals (8 ohm impedance).

Maintain output level at 50 mW approx. (0.63V across 8 ohms) during alignment.

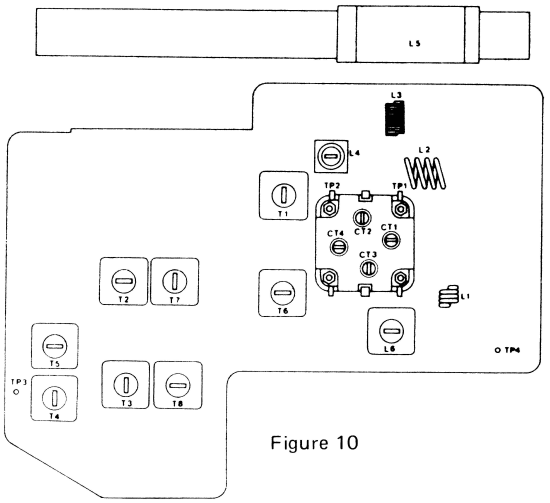

Figure 10

AM I.F. AND R.F. ALIGNMENT

1. Set the function switch to RADIO ON, and band switch to AM.
2. Set the volume control to maximum and the tone control to HIGH.
3. Derive the input signals from a standard signal generator, modulated 30% at 1000Hz.

Step	Band	Input Signal		Place to be aligned	Set the V. capacitor to
		Frequency	Given to		
1.	IF	455kHz	Loop Antenna	T3, T5, T8	Minimum
2		Repeat the step 1 and adjust for no further improvement.			
3	MW	515kHz	Loop Antenna	L7	Maximum
4		1650kHz		CT4	Minimum
5		Repeat the step 3 and 4.			
6		600kHz	Loop Antenna	L6	600kHz Signal
7		1400kHz		CT3	1400kHz Signal
8		Repeat the step 6, 7 and adjust for no further improvement.			

FM I.F. AND DISCRIMINATOR ALIGNMENT

1. Set band switch to FM.
2. Set the volume control to minimum and the tuning gang to a "no-signal" position near minimum capacity.
3. Connect the IF output from an FM sweep generator between test point TP2 and earth.
4. Connect the 'scope output of the sweep generator to the oscilloscope horizontal input.
5. **IF Alignment** Detune the core of T5, and adjust T1, T2, T3 and T4 to produce the IF response shown in Fig. 8. The marker should appear at the peak of the IF wave-form.

   Discriminator Alignment. Adjust for a symmetrical display and then peak by tuning T5 (see Fig. 9). The marker should appear on the zero line.

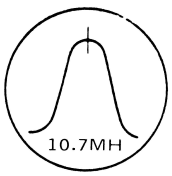

Figure 8

Figure 9

FM R.F. ALIGNMENT

Input from SSG: 75 ohm termination, 400 Hz modulation, ± 22.5 kHz deviation.

Step	Band	Input Signal		Place to be aligned	Set the V. Capacitor to
		Frequency	Given to		
1	FM	87.25MHz	TP1 and Ground	L4	Maximum
2		109MHz		CT2	Minimum
3		Repeat the step 1 and 2.			
4		90MHz	TP1 and Ground	L2	90MHz Signal
5		106MHz		CT1	106MHz Signal
6		Repeat the step 4, 5 and adjust for no further improvement.			

RECORDING

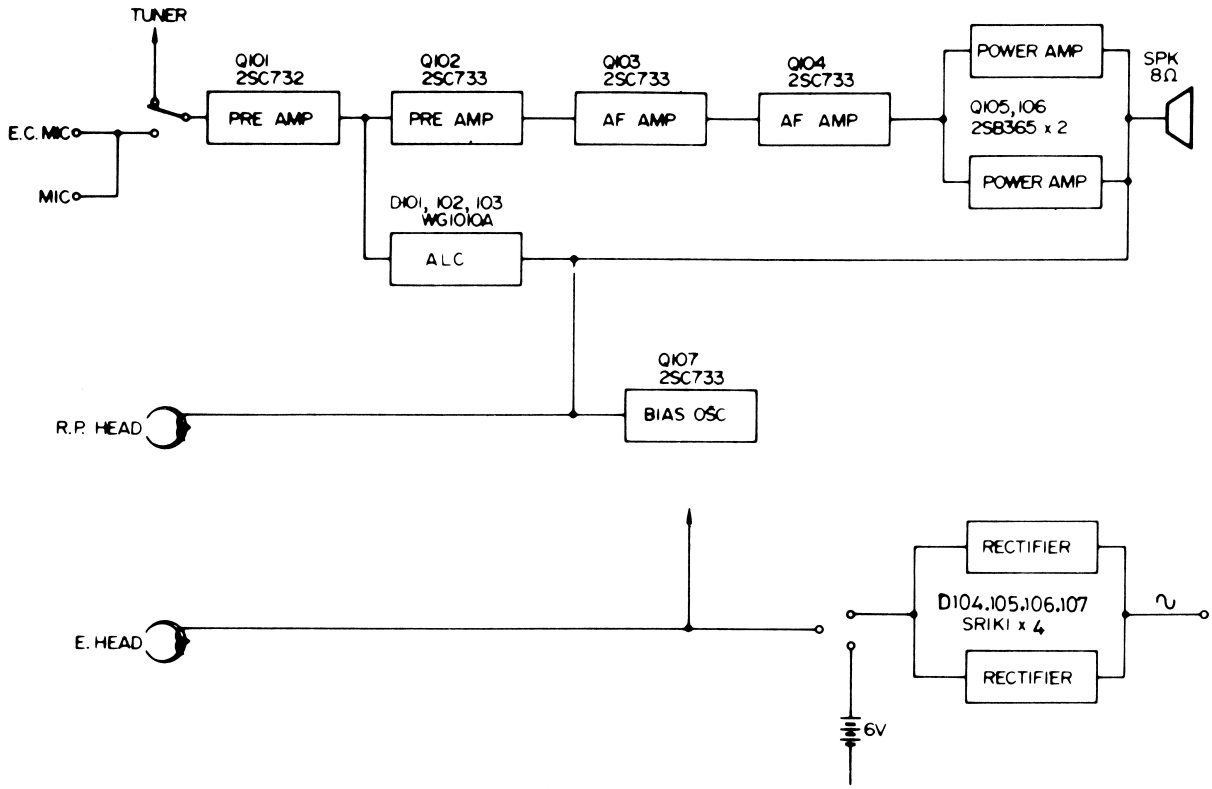

RADIO and PLAYBACK

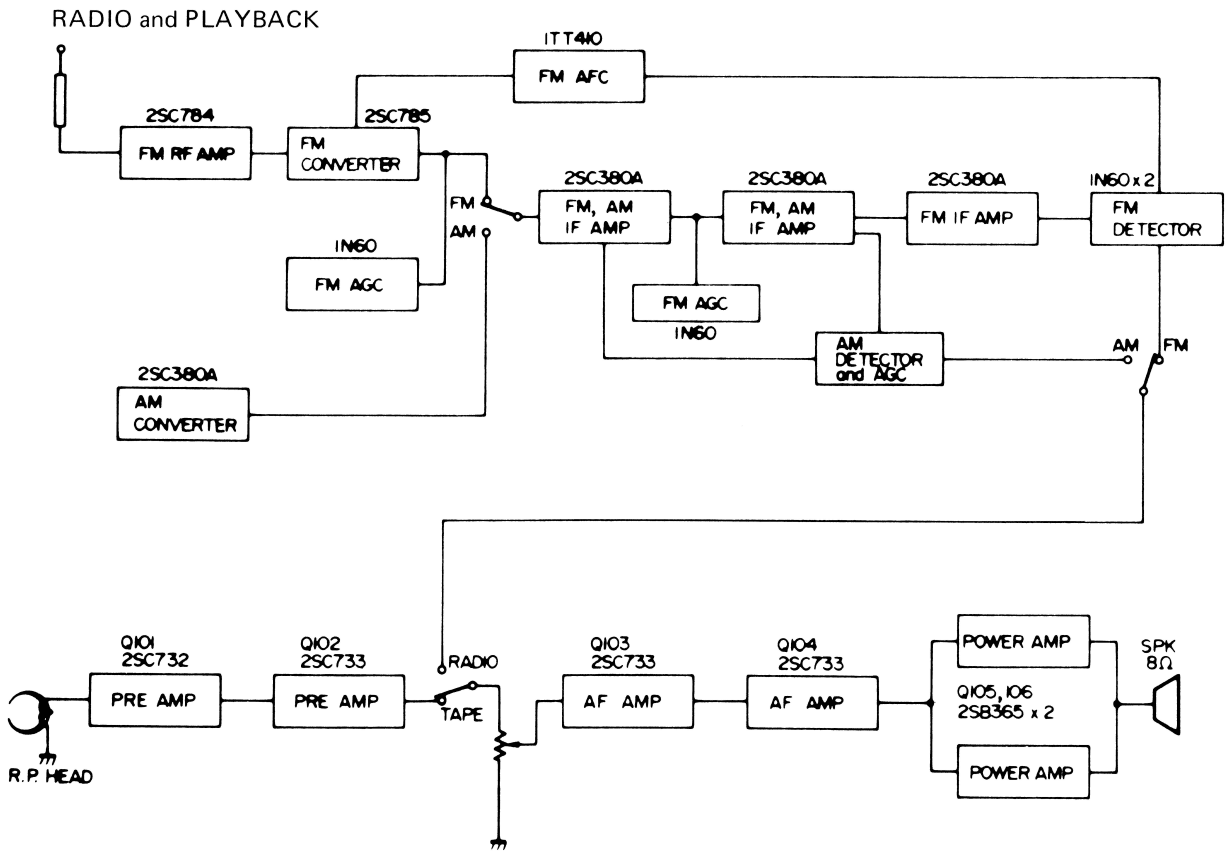

RECORDER MECHANISM PARTS LIST

1. Chassis (Plastic)	4802 464 57013
2. Turntable Assy. Right	4802 528 77026
3. Turntable Assy. Left	4802 528 77025
6. Push Button Lever (Plastic) (2x)	4802 403 37012
7. Push Button Lever (Plastic) (3x)	4802 403 37011
9. Spring (For F.F. Lever, and P.B. Stop Bar)	4802 492 37094
10. Spring (For P.B. Lever) (2x)	4802 492 37098
11. Spring (For Stop Lever)	4802 492 37089
14. Eject Lever (Plastic)	4802 403 57057
15. Spring (For Eject Lever)	4802 492 37096
16. Spring (For Mtg. Plate)	4802 492 37097
20. Brake Lever	4802 403 17006
21. Brake Rubber (2x)	4802 466 67053
22. Spring (For Brake Lever)	4802 492 37091
24. Fast Forward Lever	4802 403 37009
27. Release Lever	4802 403 37008
28. Sleep Lever (Black Plastic)	4802 403 57053
29. Bearing A (Flywheel, Upper)	4802 520 47003
30. Bearing Retainer	4802 403 57052
32. Head Mounting Plate	4802 403 57049
33. Pinch Roller Mtg. Bracket	4802 403 47007
34. Pinch Roller	4802 528 77017
38. Tension Pick-up	4802 492 67142
39. Record/Playback Head	4802 249 17011
40. Compression Spring	4802 492 57026
45. Erase Head	4802 249 47009
52. Stop, Head Plate	4802 403 57051
54. Tension Spring	4802 492 37092
55. Spring (For Release Lever)	4802 492 37093
56. Rewind Gear	4802 522 37042
57. Idler Assembly	4802 403 27006
60. Record Lever Assy.	4802 403 57056
63. Idler Wheel Mtg. Plate	4802 403 27007
64. Idler Wheel	4802 528 77027
67. Spring (Idler Wheel Mtg. Plate)	4802 492 37099
71. Motor Mtg. Bush, Rubber (3x)	4802 325 27031
72. Spacer (in bush) (3x)	4802 532 27042
73. Motor	4802 361 27016
74. Motor Pulley	4802 528 87047
75. Grub Screw, for Pulley	4802 502 17024
78. Rotary Pot. 10K/A (VR1 and VR2)	4802 100 27005
79. +ve Battery Terminal (2x)	4802 256 67011
80. -ve Battery Connector (2x)	4802 492 57025
81. Flywheel	4802 528 67018
83. Capstan Belt	4802 358 37027
85. Bearing Mtg. Plate (Flywheel)	4802 403 57058
92. Leaf Switch	4802 278 97017
93. Safety Lever	4802 403 57054
94. Spring (For Safety Lever)	4802 492 37099
95. Cassette Push Spring	4802 492 67147
99. Spring (For F.F. Lever)	4802 492 37095
100. Push Button	4802 411 67033
101 Push Button	4802 411 67033

MECHANICAL & CABINET PARTS LIST

201. Cabinet Front Assembly	4802 420 47003
203. Speaker Grille Assembly	4802 458 37018
204. Handle Assembly	4802 498 67027
205. Handle-Fixing Screw (2x)	4802 502 17025
206. Handle-Fixing Nut (2x)	4802 505 17023
208. Handle-Fixing Washer (2x)	4802 532 57059
209. Loudspeaker	4802 240 37025
210. Speaker Mtg. Clips	4802 404 67015
211. Radio Switch Lever (Plastic)	4802 404 17005
212. Spring (For Radio Sw. Lever)	4802 492 67148
213. Condenser Mic. Holder	4802 256 97005
214. Condenser Microphone Assy.	4802 242 37023
215. Telescopic Aerial	4802 303 37015
216. Spring, Cassette Holder Latching	4802 492 67146
229. Cassette Holder Assembly	4802 443 67018
230. Cassette Holder Hinge-Pin (Plastic)	4802 535 17004
301. Dial Scale	4802 333 37011
302. Volume Control Metcal	4802 454 27012
303. Tone Control Metcal	4802 454 27013
304. Model Metcal ("RR260")	4802 454 27015
305. Push-button Control Metcal	4802 454 27014
306. Rating Plate Metcal	4802 454 27016
307. Cabinet Back Assy.	4802 422 37005
308. Battery Cover	4802 443 67021
310. Control Knob (Vol. & Tone)	4802 413 37107
318. Slide Switch (Radio on/off)	4802 277 67001
401. Tuner Chassis (Plastic)	4802 464 57015
403. Switch Toggle	4802 414 27004
404. Switch Shaft	4802 535 37005
405. Spring (For AM/FM Switch)	4802 492 67149
408. Switch Toggle	4802 414 27004
409. Switch Shaft	4802 535 37005
411. Sw. Lever Stop	4802 532 17054
415. Switch Tension Spring	4802 492 37111
416. Switch Cap	4802 413 77063
418. Pulley (4x)	4802 528 87041
420. Nylon Cord	4802 321 37012
422. Dial Drum	4802 528 87048
423. Dial Cord Spring	4802 492 37112
424. Dial Cord	4802 321 37003
429. Tuner P.C. Board	4802 214 57034
431. Tuning Gang	4802 125 47005
432. Slide Lever (For AM/FM Switch)	4802 403 37013
433. Special Screw (For AM/FM Switch)	4802 502 17026
434. Tuning Knob	4802 413 47112
435. Dial Pointer	4802 450 87053
507. Fuse Holder	4822 492 60063
508. Fuse (1 amp)	4822 253 20018
602. Mains Input Socket	4802 265 17001
603. Mains Socket Cover	4802 462 77112

ACCESSORY

Mains Lead	4802 321 17021
External Microphone	4802 242 37003

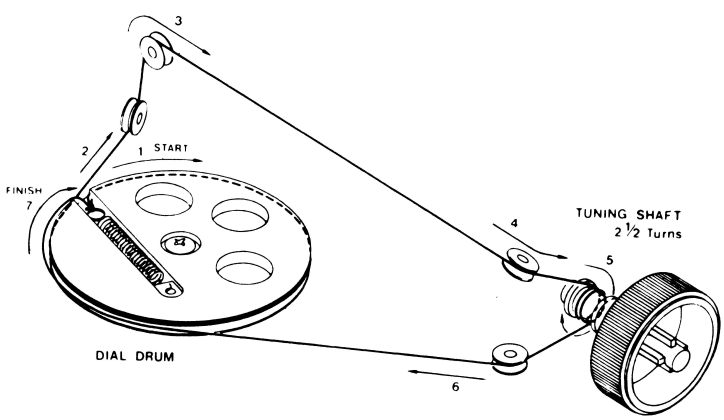

MECHANISM EXPLODED VIEW

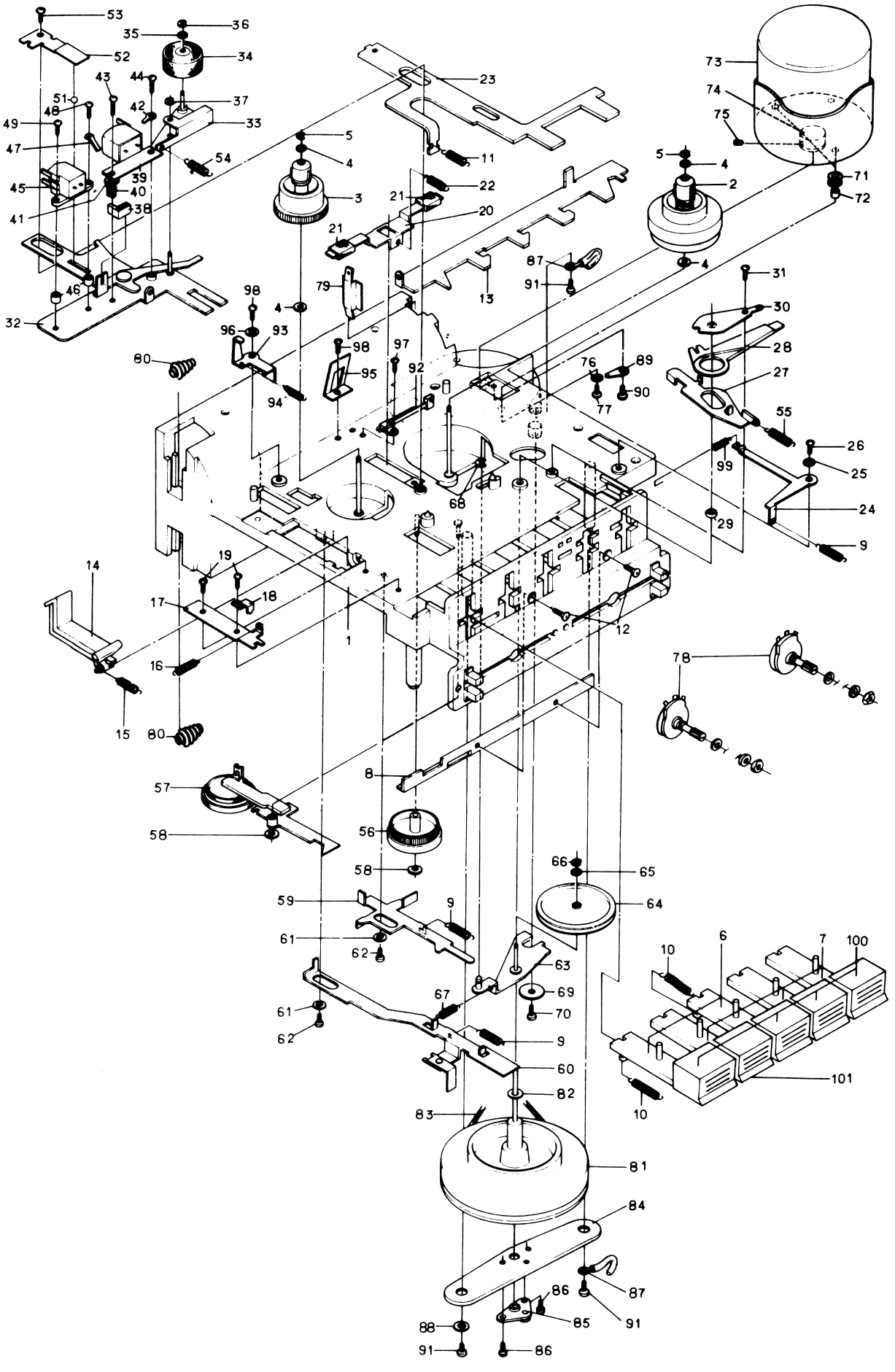

TUNER PCB PARTS LOCATION TOP VIEW

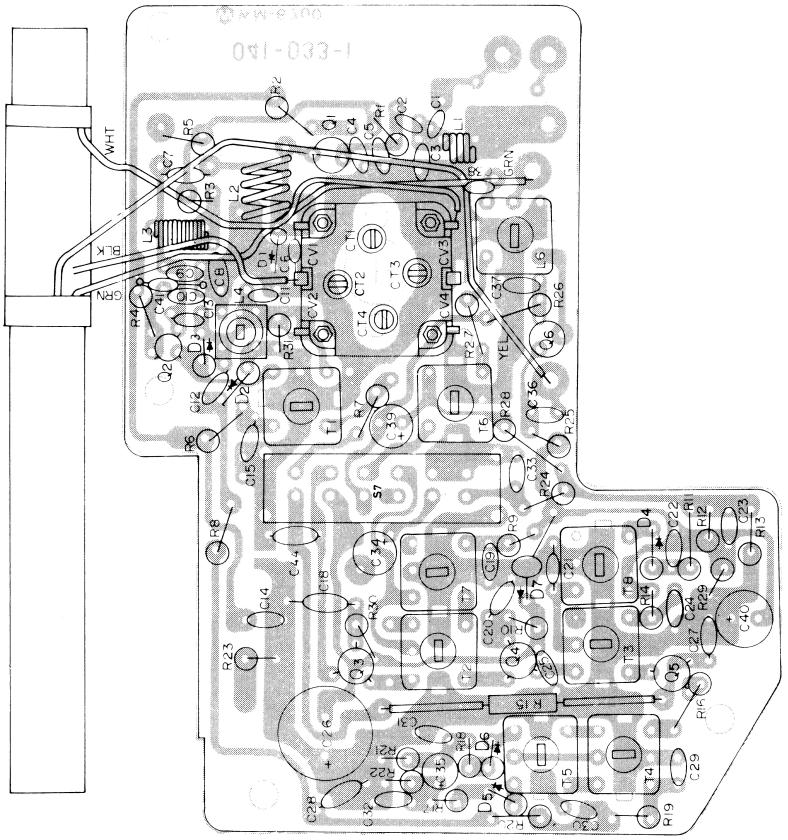

COMPONENTS LOCATION TOP VIEW

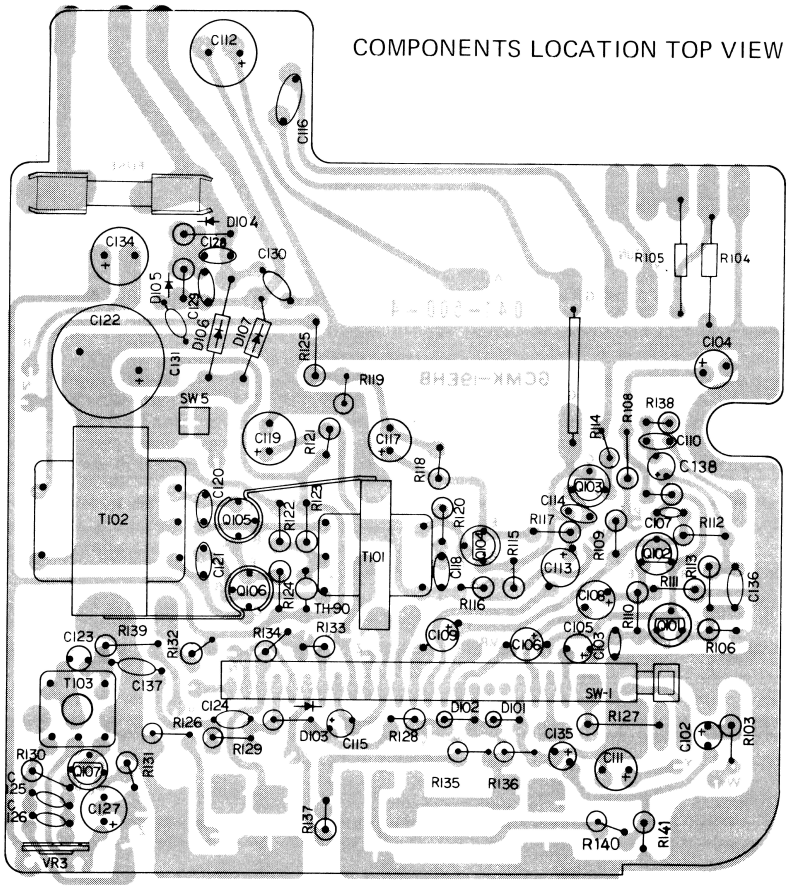

TUNER PCB PARTS LOCATION TOP VIEW

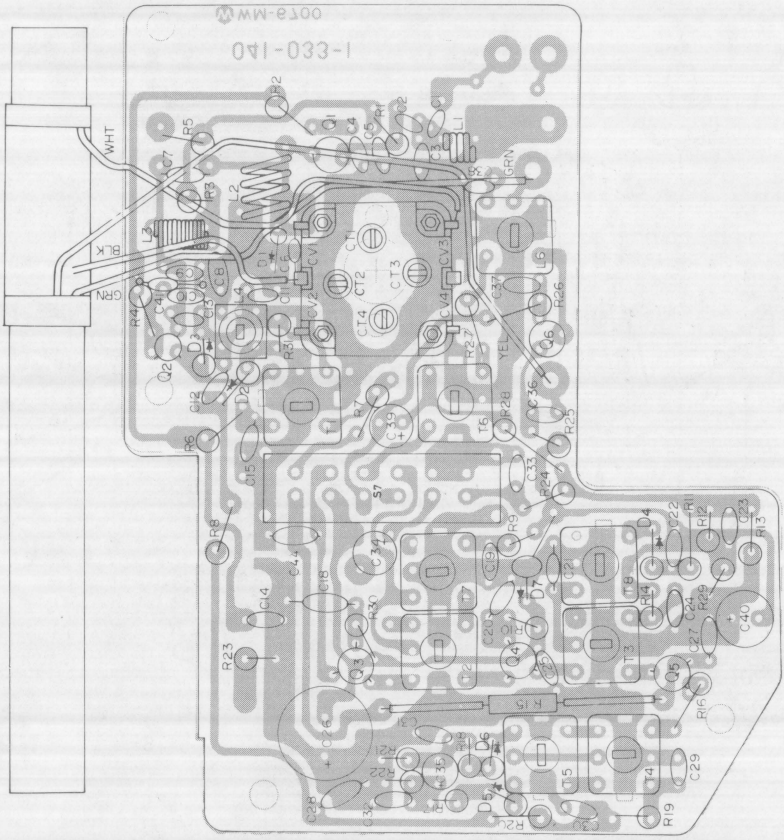

COMPONENTS LOCATION TOP VIEW

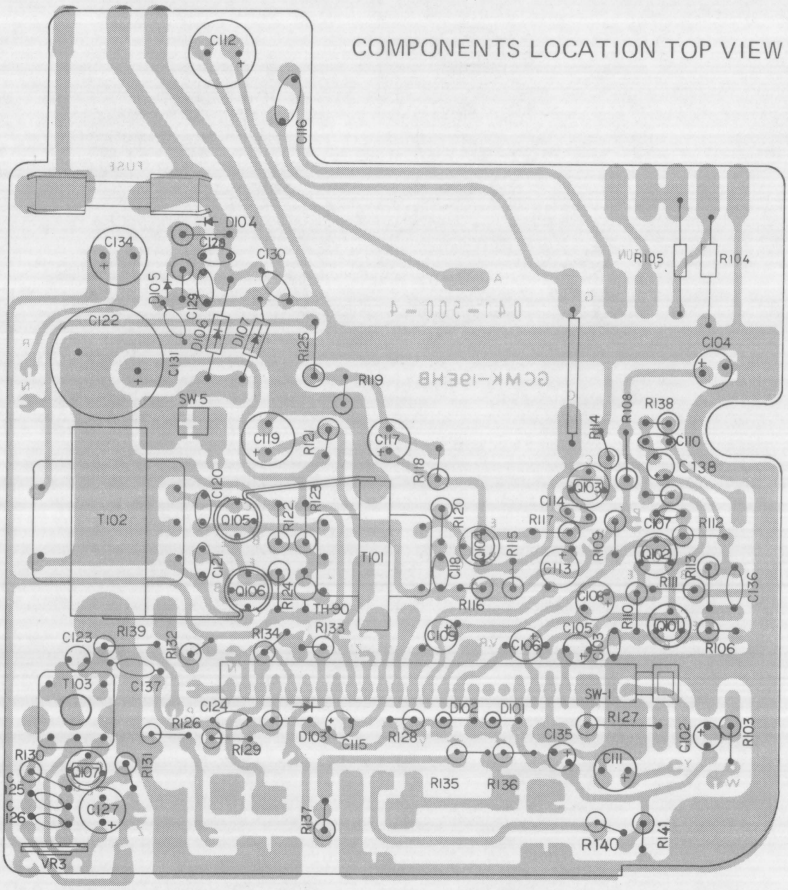

TUNER PCB PARTS LOCATION BOTTOM VIEW

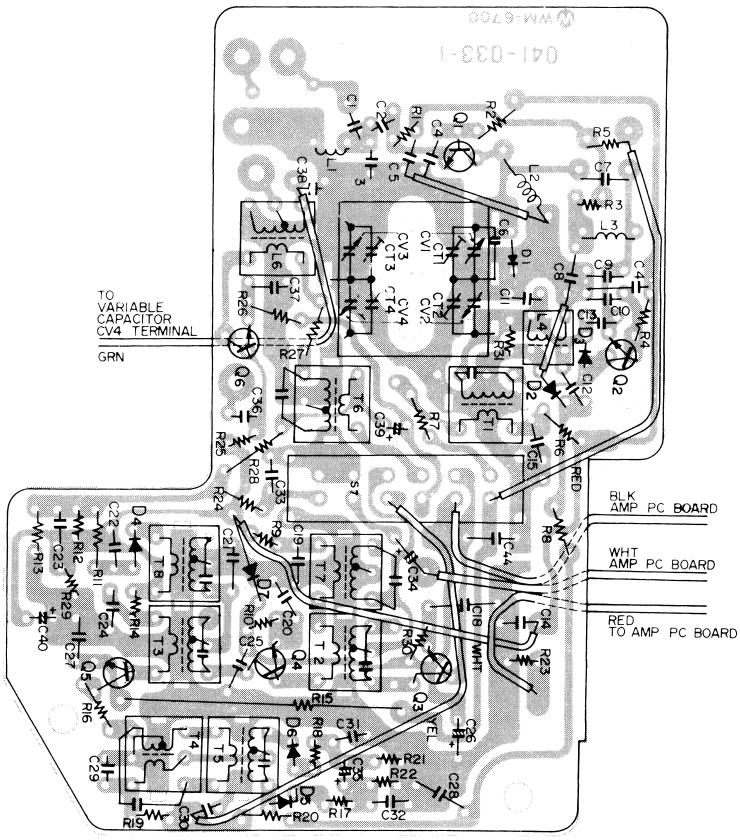

COMPONENTS LOCATION BOTTOM VIEW

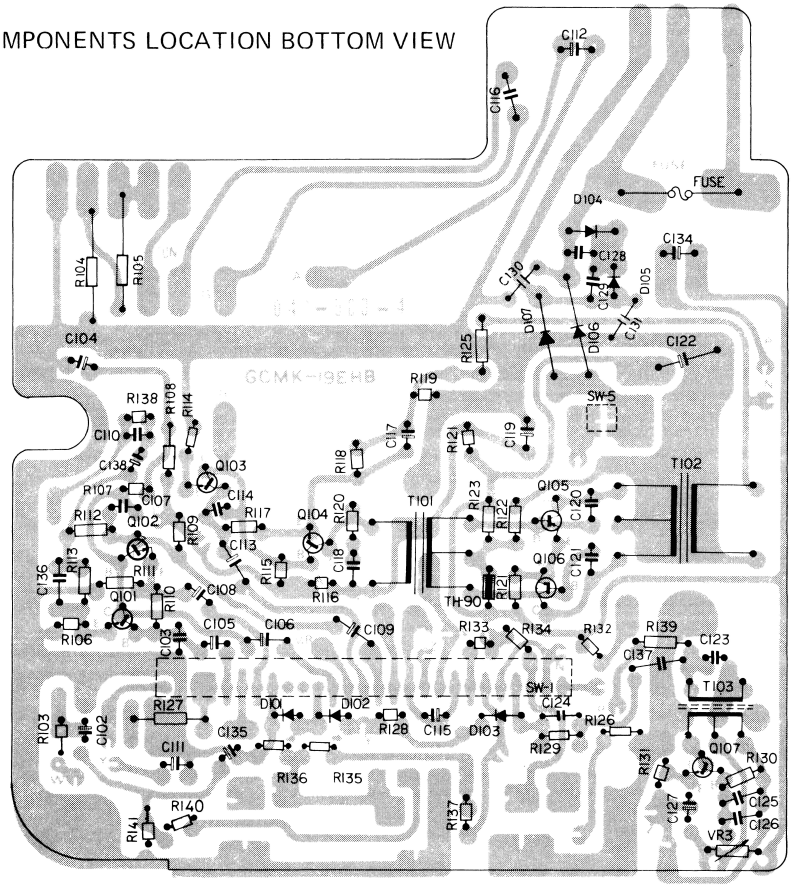

TUNER PCB PARTS LOCATION BOTTOM VIEW

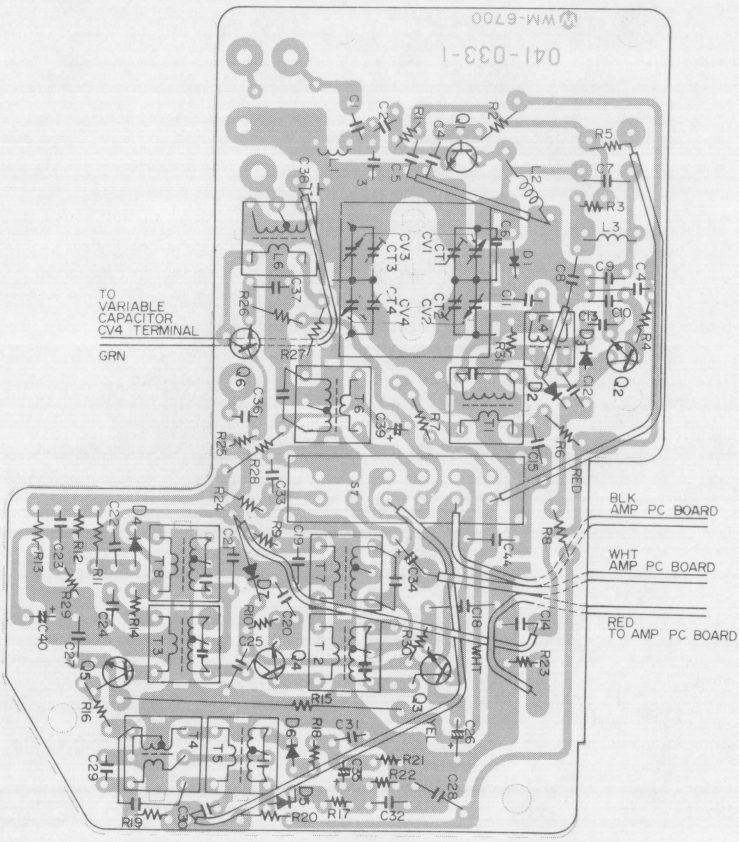

COMPONENTS LOCATION BOTTOM VIEW

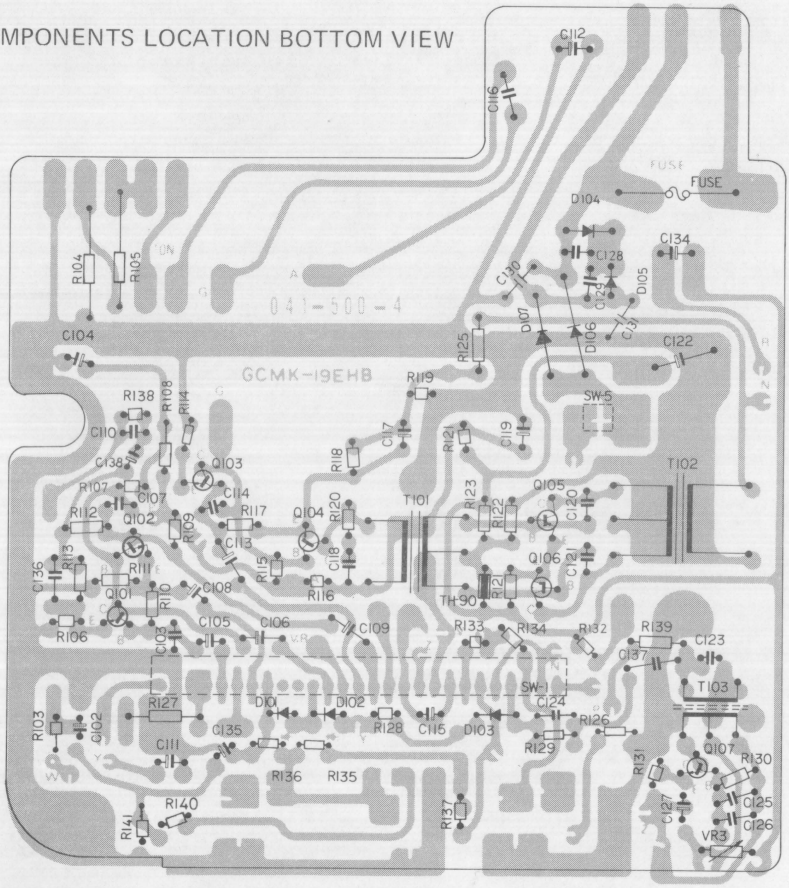

SCHEMATIC DIAGRAM

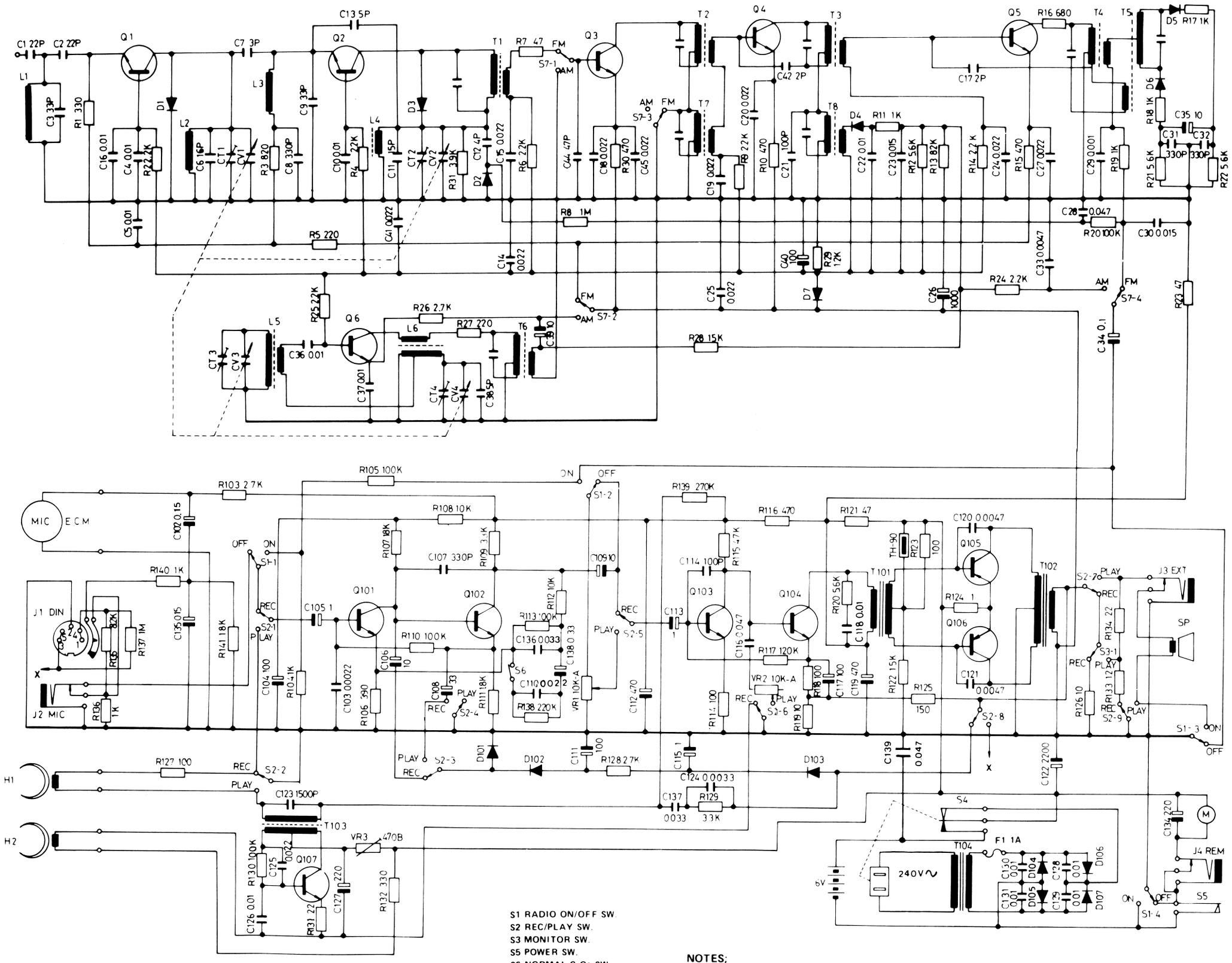

Q1	2SC784-R
Q2	2SC785-R
Q3, 4, 5, 6	2SC380A-0
D1	SV-9
D2	1TT-410
D3, 4, 5, 6	1N60
D7	EYV-320D1R2JA

S7 FM/AM SW.

S1 RADIO ON/OFF SW.
S2 REC/PLAY SW.
S3 MONITOR SW.
S5 POWER SW.
S6 NORMAL-CrO2 SW.

Q107	2SC733-GR
Q101	2SC732-BL
Q102, 103, 104	2SC733-GR, BL
Q105, 106	2SB365-B
D101, 102, 103	WG-713
D106, 107, 104, 105	SR1K-1

NOTES;
1. ALL RESISTANCE VALUES ARE IN OHM. K=1000 M=1000K
2. ALL CAPACITANCE VALUES ARE IN μF. P=10^{-6}
3. ALL RESISTORS ARE 1/4 WATT, UNLESS OTHERWISE SPECIFIED.
4. VOLTAGES MEASURED FROM POINT INDICATOR TO CHASSIS GROUND WITH V.T.V.M. AT LINE VOLUME CONTROL MINIMUM AND NO SIGNAL.

(SPECIFICATIONS AND CIRCUITS SUBJECT TO CHANGE WITHOUT NOTICE FOR IMPROVEMENT.)

WIRING DIAGRAM

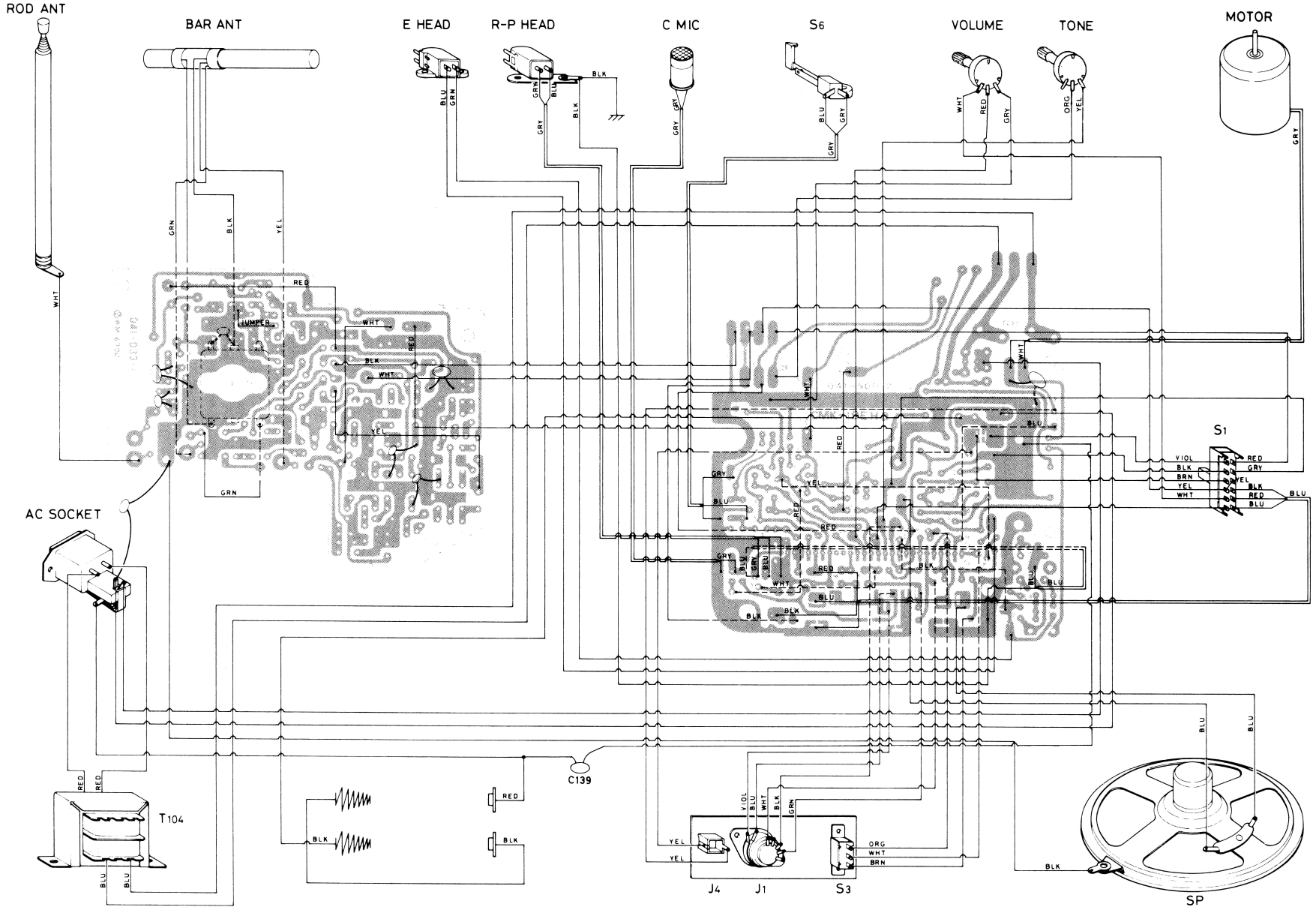

260-MN-00

WIRING DIAGRAM

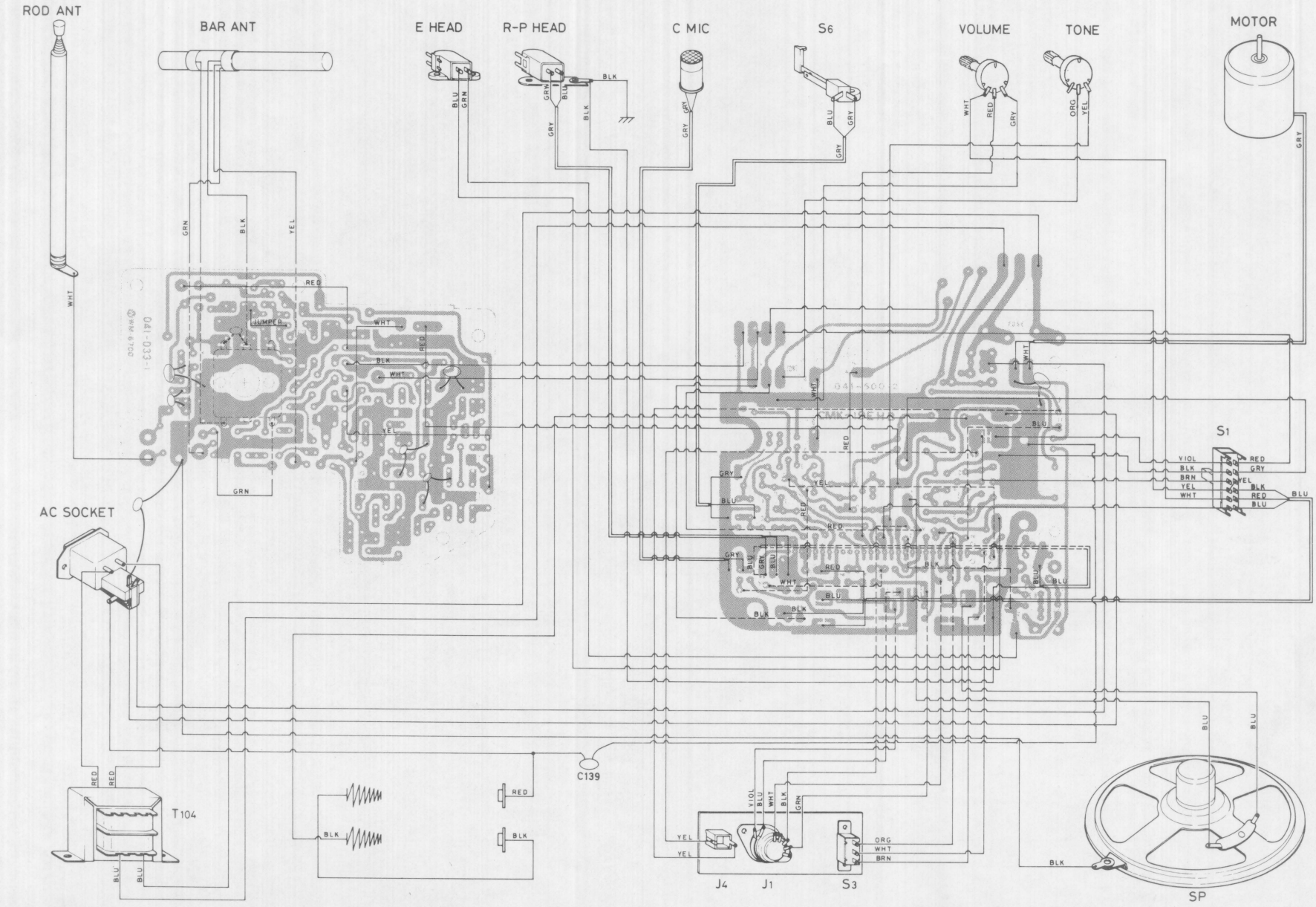

260-MN-00

ELECTRICAL PARTS LIST

CAPACITORS & RESISTORS All fixed capacitors and resistors are standard types and values.

CV1-4	Tuning Capacitor (incl. CT1-4, Trimmers)	4802 125 47005
VR1	10K Rotary Pot. Taper A (Volume)	4802 100 27005
VR2	10K Rotary Pot. Taper A (Tone)	4802 100 27005
VR3	470R Preset Pot. (Bias Adj.)	4802 100 10023

INDUCTORS

L1	Coil	4802 157 47021
L2	Coil	4802 157 47022
L3	Coil	4802 157 47023
L4	Coil	4802 156 27072
L5	Rod Aerial Assy.	4802 158 67069
L6	Coil	4802 156 47041
T1	F.M. IFT.	4802 153 57009
T2	F.M. IFT.	4802 153 57011
T3	F.M. IFT.	4802 153 57011
T4	F.M. IFT.	4802 153 57013
T5	F.M. IFT.	4802 153 57014
T6	A.M. IFT.	4802 153 17115
T7	A.M. IFT.	1802 153 17116
T8	A.M. IFT.	4802 153 17117
T101	Input Transformer	4802 142 57002
T102	Output Transformer	4802 140 67024
T103	Oscillator Transformer	4802 153 17091
T104	Mains Transformer	4802 145 37017

SEMI CONDUCTORS

D1	Varistor SV-9	4802 130 37064
D2	Variable Cap. Diode ITT-410	4802 130 37065
D3	Diode 1N60 (AA119)	5322 130 40229
D4	Diode 1N60 (AA119)	5322 130 40229
D5	Diode 1N60 (AA119)	5322 130 40229
D6	Diode 1N60 (AA119)	5322 130 40229
D7	Diode EYV-320D1R2J	4802 130 37066
D101	Diode WG713	4802 130 37063
D102	Diode WG723	4802 130 37063
D103	Diode WG713	4802 130 37063
D104	Diode SR1K-1 (OA626-200)	4802 130 37033
D105	Diode SR1K-1 (OA626-200)	4802 130 37033
D106	Diode SR1K-1 (OA626-200)	4802 130 37033
D107	Diode SR1K-1 (OA626-200)	4802 130 37033
Q1	Silicon Transistor 2SC784-R (BF173)	5322 130 40511
Q2	Silicon Transistor 2SC785-R (BF173)	5322 130 40511
Q3	Silicon Transistor 2SC380A-0 (BF173)	5322 130 40511
Q4	Silicon Transistor 2SC380A-0 (BF173)	5322 130 40511
Q5	Silicon Transistor 2SC380A-0 (BF173)	5322 130 40511
Q6	Silicon Transistor 2SC380A-0 (BF173)	5322 130 40511
Q101	Silicon Transistor 2SC732-BL	4802 130 47077
Q102	Silicon Transistor 2SC733-BL (BC547A)	4802 130 47116
OR	Silicon Transistor 2SC733-GR (BC547B)	4822 130 40959
Q103	Silicon Transistor 2SC733-BL (BC547A)	4802 130 47116
OR	Silicon Transistor 2SC733-GR (BC547B)	4822 130 40959
Q104	Silicon Transistor 2SC733-BL (BC547A)	4802 130 47116
OR	Silicon Transistor 2SC733-GR (BC547B)	4822 130 40959
Q105	Germanium Transistor 2SB365-B (AC128)	5322 130 40095
Q106	Germanium Transistor 2SB365-B (AC128)	5322 130 40095
Q107	Silicon Transistor 2SC733-GR (BC547B)	4822 130 40959

MISCELLANEOUS

J1	5 way DIN Socket (Aux)	4822 267 40162
J2	3.5mm. Dia. Jack Socket (Mic.)	4802 267 37017
J3	3.5mm. Dia. Jack Socket (Ext.)	4802 267 37017
J4	2.5mm. Dia. Jack Socket (Rem.)	4822 264 30065
S1	Slide Switch (Radio on/off)	4802 277 67001
S2	Slide Switch (Record/playback)	4802 277 37007
S3	Slide Switch (Monitor)	4802 277 27016
S4	Mains/Batt. Changeover Switch	Part of Mains Skt.
S5	Leaf Switch (Power)	4802 278 97021
S6	Leaf Switch (Normal-Cr02)	4802 278 97017
S7	Slide Switch (FM/AM)	4802 277 67002
TH-90	Thermistor	4802 116 37009
F1	Fuse, 1 AMP.	4822 253 20018

HEAD REPLACEMENT AND AZIMUTH ADJUSTMENT

NOTE 1: Do not touch the head with a magnetised screwdriver or other tool or its performance will be adversely affected.

2: Avoid overheating when soldering wires to the head.

To replace head (Figure 2 refers)

1. Erase head. Removal of screws A & B enables the erase head to be removed.
2. Playback/Record head. Removal of screws C & D enables the head to be removed.

To adjust head angle (Azimuth). (Figure 2 refers).

When the Playback/Record head has been replaced, adjust the head angle as follows:

1. Load a standard 6.3kHz test tape into the cassette compartment.
2. Connect an 8 ohm resistor across the earphone socket. Adjust the head azimuth adjuster screw (C) for max. output as measured by a V.T.V.M. across the 8 ohm resistor.

Note: Reduce volume, as required, to avoid clipping.

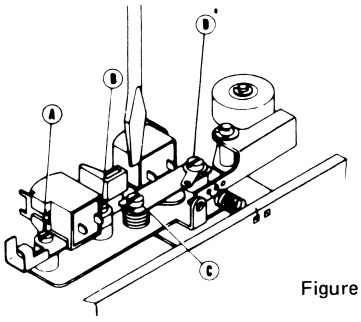

Figure 2

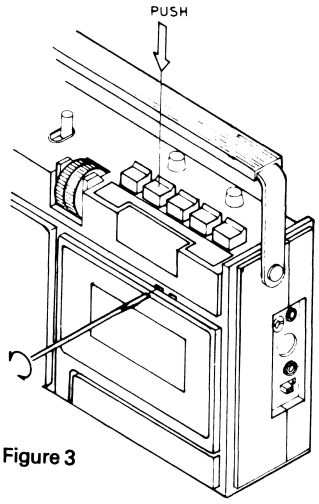

Figure 3

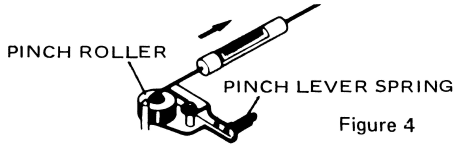

Figure 4

ADJUSTMENTS

1. **Pinch roller pressure** (300-400g)

   Measure with a tension gauge at the point where revolution of the pinch roller stops when the gauge is applied as shown in fig. 4.

2. **Take-up torque** (40-65 g/cm.)

   Measure the torque on the take-up reel platform operating in PLAY. If less than 40 g/cm, check for slipping between the reel platform and the PLAY idler (fig. 5 refers).

1. If slipping is occurring, clean the rubber parts of the take-up reel platform and pulley of the drive roller assembly with alcohol.
2. If the reel platform itself is slipping, replace it.

3. **Rewind torque** (60-100 g/cm.)

   Measure the torque on the supply reel platform operating in REW. If less than 60 g/cm, clean the supply reel platform, REW idler assembly, REW pulley assembly, belt, and flywheel, with alcohol. (fig. 6 refers).

4. **FF torque** (60-100 g/cm)

   Measure the torque on the take-up reel platform operating in F.FWD. If less than 60 g/cm, check for slipping between the reel platform and the PLAY idler. If slipping is occurring, clean the rubber part of the take-up reel platform, the flywheel, and the F.F. idler, with alcohol. (fig. 7 refers).

5. **F.F. and REW. times.** 180 sec. with C-60 cassette in battery operation.

6. **Bias current adjustment.** After the trap coil adjustment, adjust the preset (VR3) such that the voltage across R127 (100 ohm) is 70 mV i.e. current is 700 uA

7. **Tape speed** 300 c/s, + 3-2

   Lubrication — use correct lubricants, apply sparingly, avoid contact with other parts.

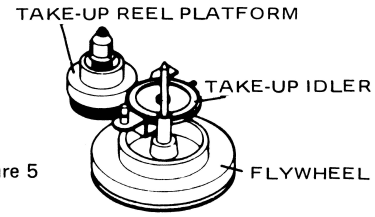

Figure 5

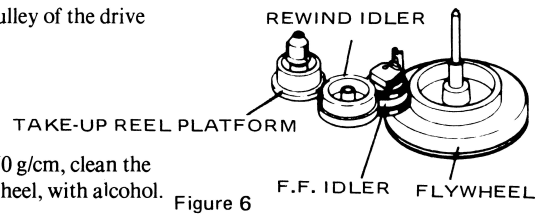

Figure 6

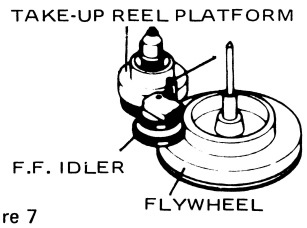

Figure 7

TUNER EXPLODED VIEW

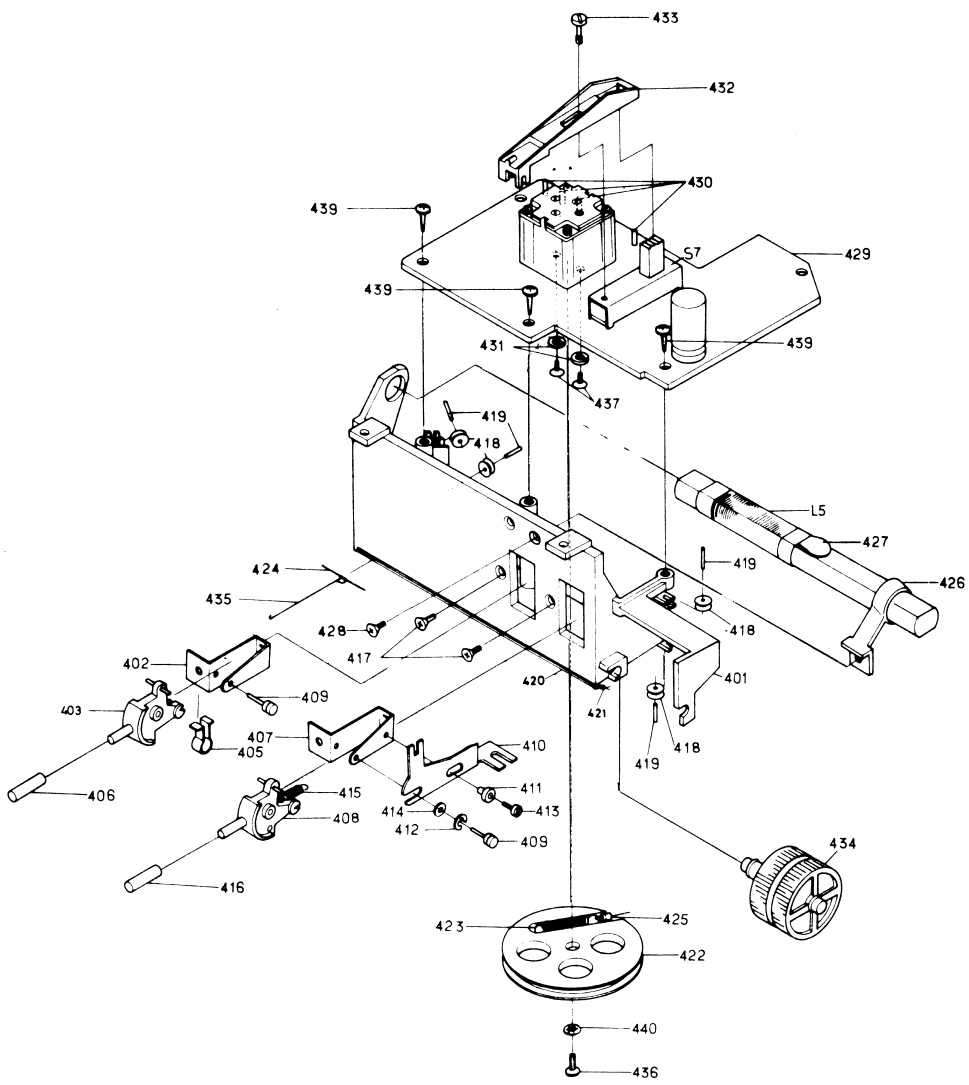

POWER SUPPLY EXPLODED VIEW

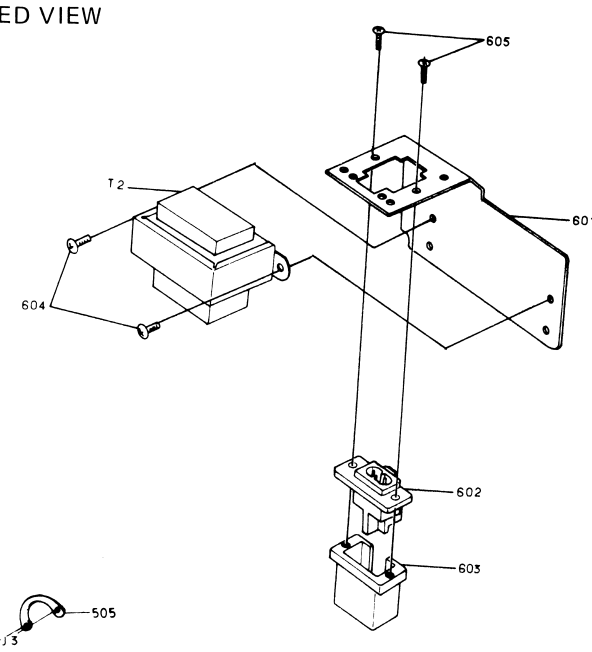

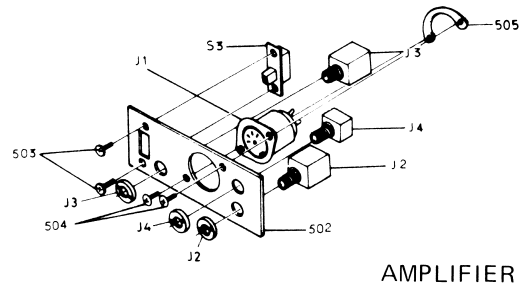

AMPLIFIER EXPLODED VIEW

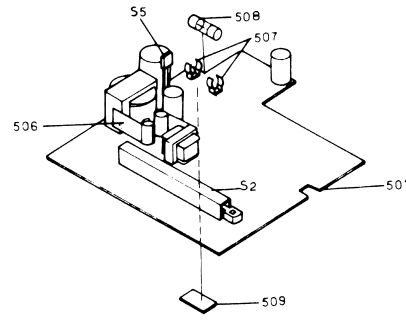
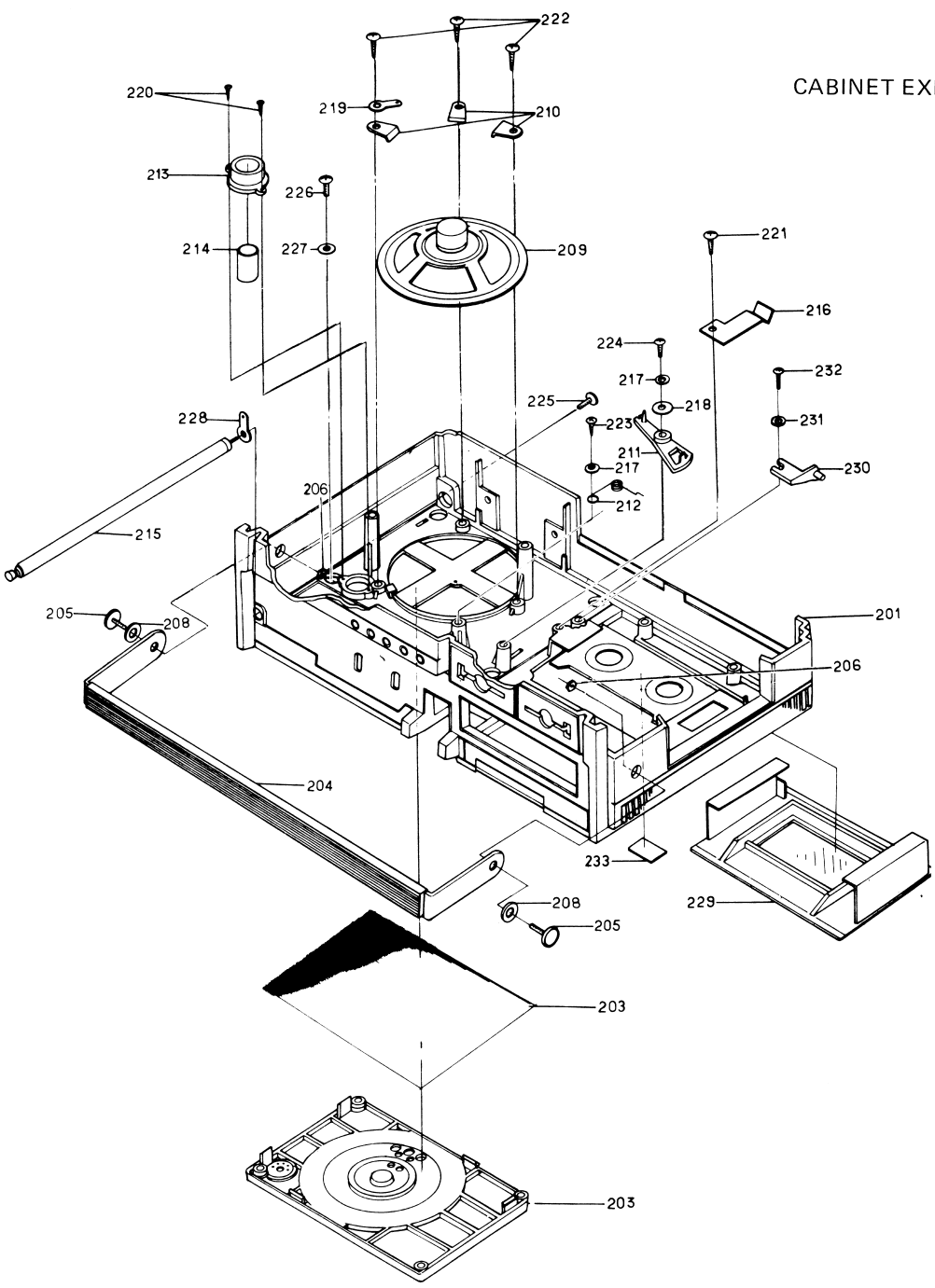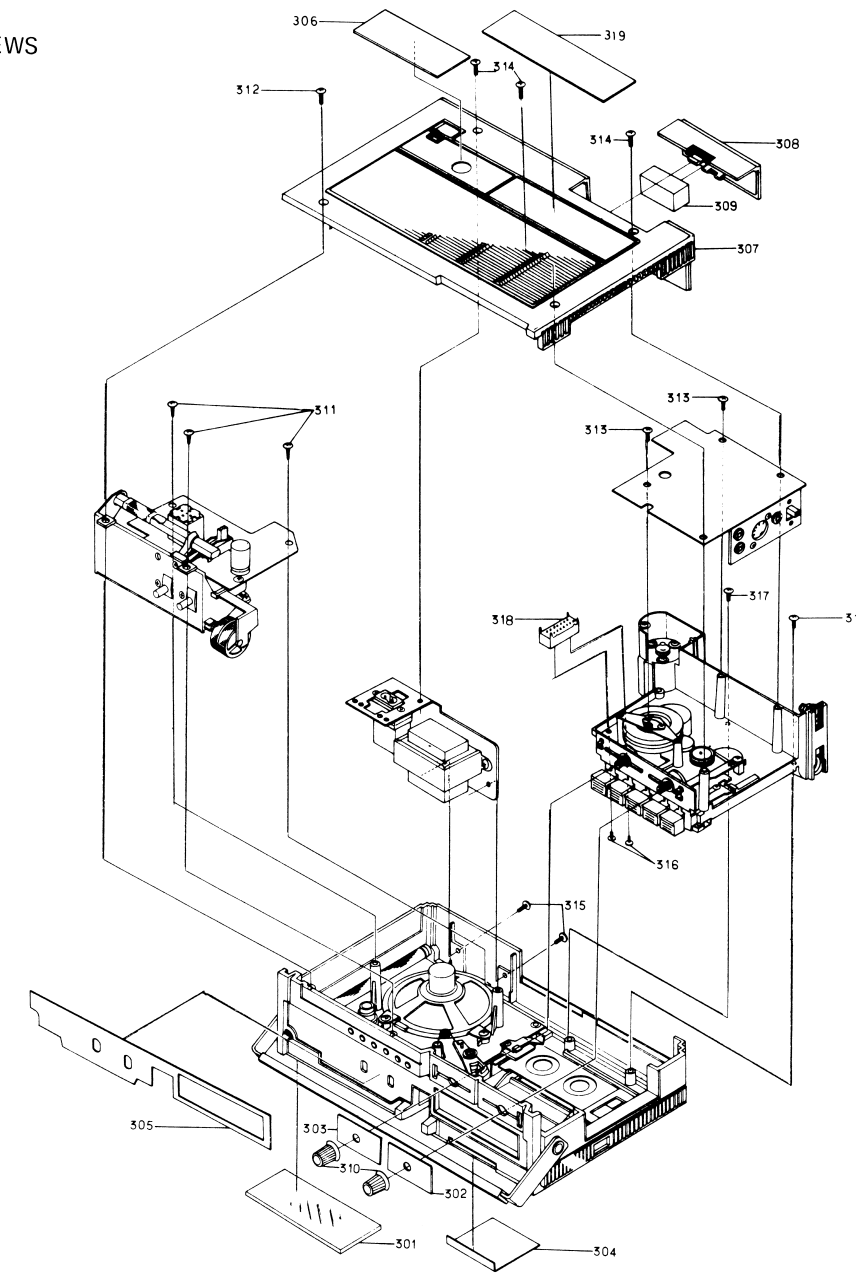
CABINET EXPLODED VIEWS