Ciarion Co., Ltd. Export Division- 22-3, Shibuya 2-chome, Shibuyaku, Tokyo, 150 Japan Tel: 03-3400-1121 Fax: 03-3400-8679 Telex: J22908, J22152
Service Dept.- 35-2 Hakusan, 5-chome, Bunkyo-ku, Tokyo, 112 Japan Tel: 03-3813-5151 Fax: 03-3814-2550

clarion Service Manual

Published by Service Dept.

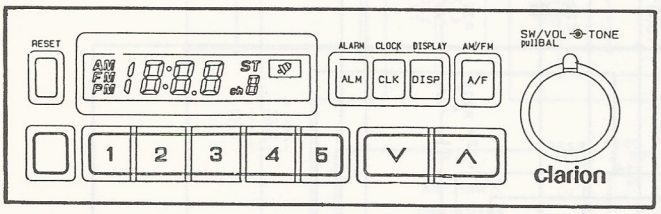

NISSAN
Automobile Genuine
FM/AM Radio

Model **RP-9137C**

(Genuine No. 28013 62T01)

SPECIFICATIONS

RADIO SECTION

Circuit system:	Superheterodyne
Tuning system:	Electronic tuning
Receive range:	FM 87.5MHz to 107.9MHz
	AM 531kHz to 1602kHz
Intermediate frequency:	
	FM 10.7MHz
	AM 450kHz
Quieting sensitivity:	FM Less than 18dB (at 30dB S/N)
	AM Less than 33dB (at 20dB S/N)
Separation:	FM More than 20dB
Auto tuning stop sensitivity:	
	FM DX:22～38dB
	AM DX:26～42dB

GENERAL

Load impedance:	8Ω×2
Power output:	More than 8.0W×2 (at max. output)
Power supply voltage:	
	DC 26.4V
	Negative ground
Current consumption:	
	Less than 3A (at max. output)
Dimensions:	Width 180mm
	Height 50mm
	Depth 100mm
Weight:	775g

※ For improvement purposes,specifications and design are subject to change without prior notice.

COMPONENTS

RP-9137C-B

Main unit 1

CAUTIONS

During repair or inspection,observe the followings.

1. Use specified parts.
   The system uses parts with special safety characteristics against flame and voltage.Use only parts with equivalent characteristics when replacing them.

2. Place the parts and wiring back in their original positions after replacement or re-wiring.
   For proper circuit construction,use of insulation tubes,bonding,gaps to P.W.B. etc.is involved.The wiring connection and routing to the P.W.B. are specially devised using clamps to keep away from heated and high-voltage parts.So,make sure to replace them back in their original positions after repair or inspection.

3. Check for safety after repair.
   Check that the screws,parts,and wires are put back securely in their original position after repair.And make sure for safety reasons there is no possibility of secondary ploblems around the repaired spots.

4. Cautions regarding chips.
   Do not reuse removed chips even when no abnormality is observed in their appearance.Always replace them with new ones.(The chip parts include resistors, condensers, diodes, transistors, etc.).The negative pole of tantalum condensers is highly susceptible to heat,so use special care when replacing them,and check operation afterward.

■ EXPLODED VIEW · PARTS LIST

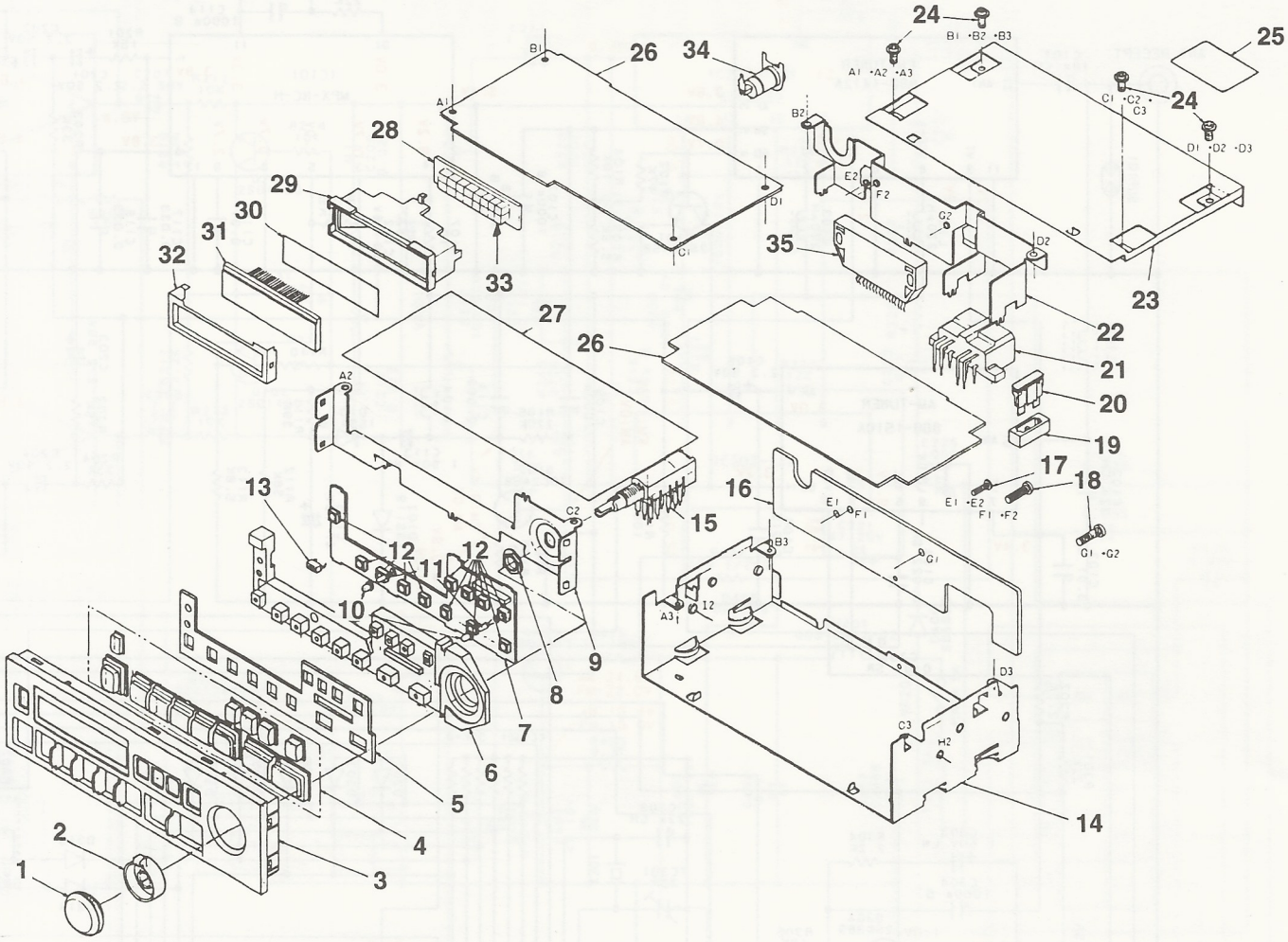

NO.	PART NO.	DESCRIPTION	Q'TY
1	380-5044-00	KNOB(IN)	1
2	380-5045-00	KNOB(OUT)	1
3	370-5100-06	ESCUTCHEON	1
4	947-0198-09	BUTTON ASS'Y	1
5	345-4913-00	CUSHION RUBBER	1
6	335-3008-04	ILLUMI PLATE	1
7	099-8643-01	SWITCH PWB	1
8	722-0370-00	NUT	1
9	309-0592-02	FRONT PLATE	1
10	345-3436-11	PILOT CAP(GREEN)	2
11	017-0432-00	PILOT LAMP(12V 60mA)	2
12	513-3694-11	SWITCH	11
13	013-3812-00	SWITCH(SCAN)	1
14	311-1334-00	LOWER CASE	1
15	012-4689-01	VARIABLE RESISTOR	1
16	313-1419-00	HEAT SINK	1
17	714-2610-81	MACHINE SCREW	1
18	732-3014-11	SEMS SCREW	2

NO.	PART NO.	DESCRIPTION	Q'TY
19	335-3086-00	FUSE SUPPORT	1
20	060-0057-52	AUTO FUSE(3A)	1
21	074-0815-05	OUTLET SOCKET	1
22	307-0439-00	REAR COVER	1
23	310-1377-00	UPPER CASE	1
24	716-0821-01	IT SCREW	4
25	286-8423-00	SETPLATE	1
26	099-8645-04	MAIN PWB	1
27	347-2907-00	INSULATOR	1
28	099-8830-00	LED PWB	1
29	335-3277-02	LCD HOLDER	1
30	347-3045-06	LCD COLOR	1
31	379-0291-01	INDICATOR	1
32	330-8717-02	LCD SUPPORT	1
33	001-0312-22	DIODE	18
34	092-0612-02	ANT RECEPTACLE	1
35	051-0986-00	IC	1

■ CIRCUIT DIAGRAM

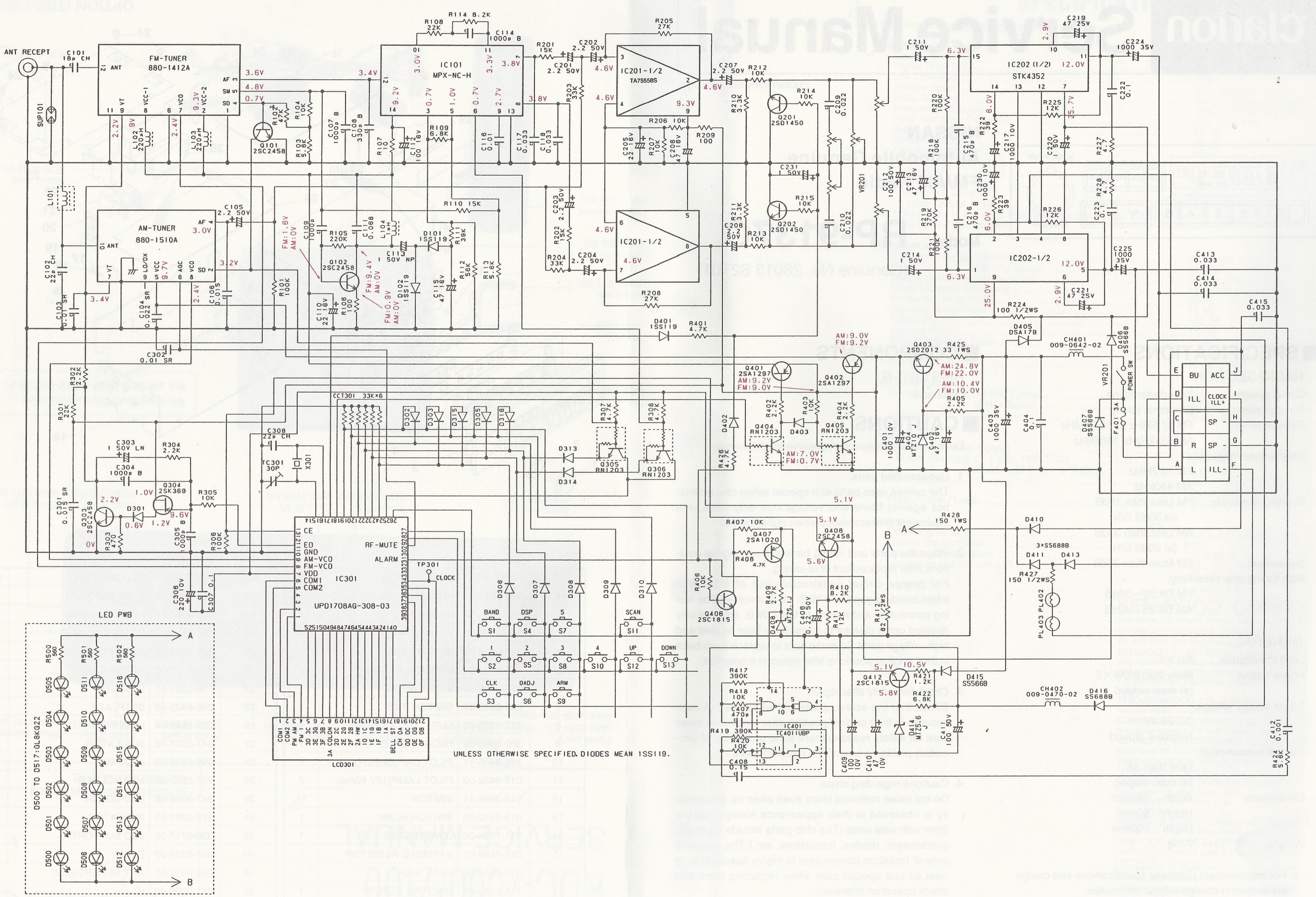

RP-9137C

■ PRINTED WIRING BOARD

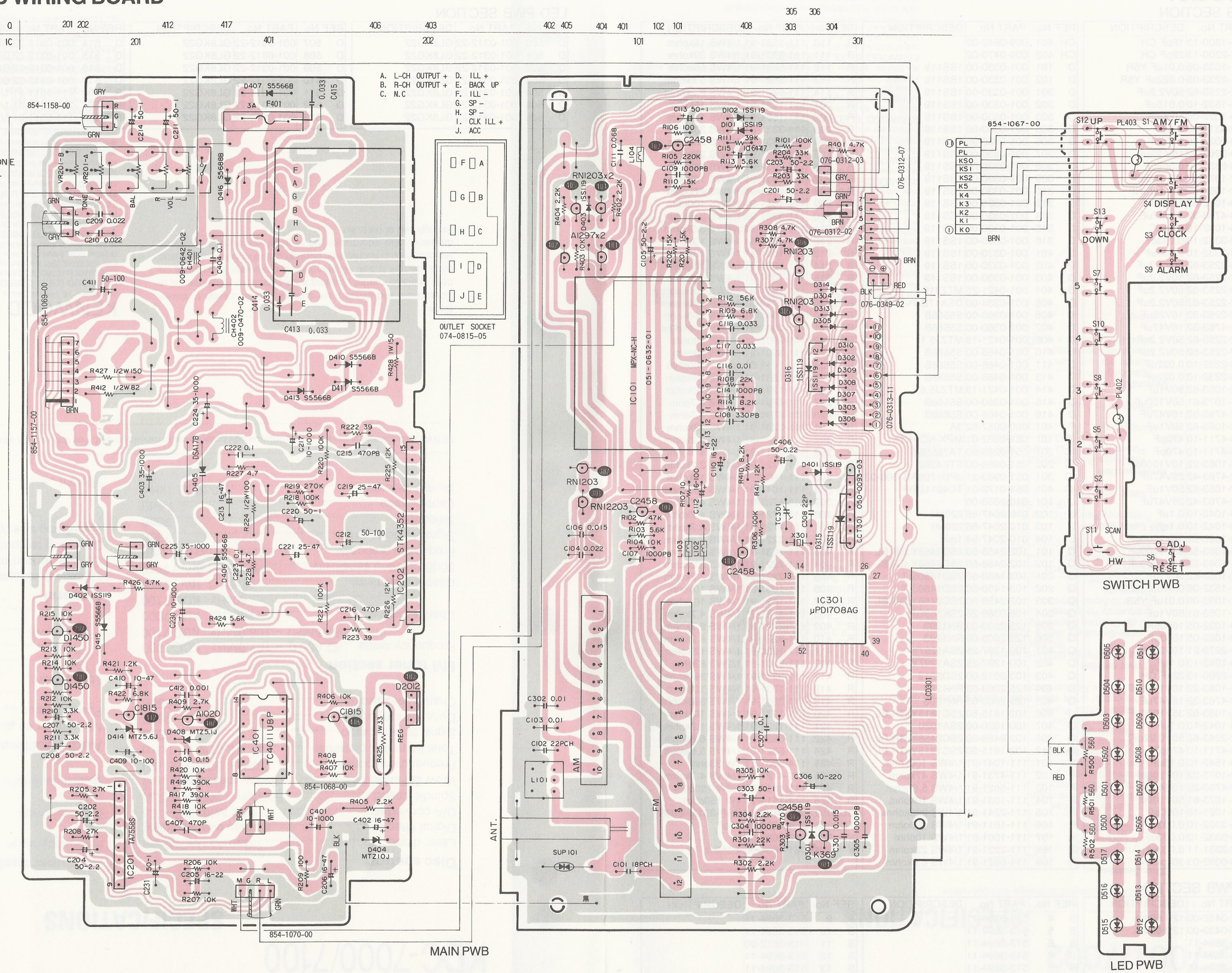

RP-9137C

RP-9137C

■ PARTS LIST

MAIN PWB SECTION

REF No.	PART No.	DESCRIPTION
C 101	174-1800-13	18pF CH
C 102	174-2200-13	22pF CH
C 103	171-1033-06	0.01uF Y5R
C 104	171-2233-06	0.022uF Y5R
C 105	182-2253-62	50V2.2uF
C 106	173-1532-10	0.015uF
C 107	160-1022-05	1000pF
C 108	160-3312-05	330pF
C 109	160-1022-05	1000pF
C 110	179-2263-32	16V 22uF
C 111	173-6832-10	0.068uF
C 112	182-1073-33	16V100uF
C 113	182-1056-62	50V1uF NP
C 114	160-1022-05	1000pF
C 115	183-4763-32	16V47uF
C 116	173-1032-10	0.01uF
C 117	173-3332-10	0.033uF
C 118	173-3332-10	0.033uF
C 201	183-2253-62	50V2.2uF
C 202	182-2253-62	50V2.2uF
C 203	183-2253-62	50V2.2uF
C 204	182-2253-62	50V2.2uF
C 205	182-2263-32	16V22uF
C 206	182-4763-32	16V47uF
C 207	182-2253-62	50V2.2uF
C 208	182-2253-62	50V2.2uF
C 209	173-2232-10	0.022uF
C 210	173-2232-10	0.022uF
C 211	182-1053-62	50V1uF
C 212	184-1073-61	50V100uF
C 213	182-4763-32	16V47uF
C 214	182-1053-62	50V1uF
C 215	173-4711-10	470pF
C 216	173-4711-10	470pF
C 217	184-1083-22	10V1000uF
C 219	182-4763-42	25V47uF
C 220	182-1053-62	50V1uF
C 221	182-4763-42	25V47uF
C 222	173-1042-10	0.1uF
C 223	173-1042-10	0.1uF
C 224	184-1083-52	35V1000uF
C 225	184-1083-52	35V1000uF
C 230	184-1083-22	10V1000uF
C 231	182-1053-62	50V1uF
C 301	171-1532-06	0.015uF Y5R
C 302	171-1033-06	0.01uF Y5R
C 303	181-1053-61	50V1uF
C 304	160-1022-05	1000pF
C 305	160-1022-05	1000pF
C 306	184-2273-21	10V220uF
C 307	173-1042-10	0.1uF
C 308	174-2200-13	22pF CH
C 401	184-1083-22	10V1000uF
C 402	182-4763-32	16V47uF
C 403	184-1083-52	35V1000uF
C 404	173-1042-10	0.1uF
C 406	182-2243-62	50V0.22uF
C 407	173-4711-10	470pF
C 408	173-1542-10	0.15uF
C 409	182-1073-22	10V100uF
C 410	182-4763-22	10V47uF
C 411	184-1073-61	50V100uF
C 412	173-1021-10	1000pF
C 413	173-3332-10	0.033uF
C 414	173-3332-10	0.033uF
C 415	172-3331-11	0.033uF
CCT301	050-0093-03	30kohmx6

REF No.	PART No.	DESCRIPTION
CH 401	009-0642-02	
CH 402	009-0470-02	
D 101	001-0330-00	1SS119
D 102	001-0330-00	1SS119
D 301	001-0330-00	1SS119
D 302	001-0330-00	1SS119
D 303	001-0330-00	1SS119
D 305	001-0330-00	1SS119
D 306	001-0330-00	1SS119
D 307	001-0330-00	1SS119
D 308	001-0330-00	1SS119
D 309	001-0330-00	1SS119
D 310	001-0330-00	1SS119
D 313	001-0330-00	1SS119
D 314	001-0330-00	1SS119
D 315	001-0330-00	1SS119
D 316	001-0330-00	1SS119
D 401	001-0330-00	1SS119
D 402	001-0330-00	1SS119
D 403	001-0330-00	1SS119
D 404	001-0421-25	MTZJ10
D 405	001-0334-00	DSA17B
D 406	001-0360-00	S5566B
D 407	001-0360-00	S5566B
D 408	001-0421-18	MTZJ5.1
D 410	001-0466-00	S5688B
D 411	001-0466-00	S5688B
D 413	001-0466-00	S5688B
D 414	001-0421-19	MTZJ5.6
D 415	001-0360-00	S5566B
D 416	001-0466-00	S5688B
F 401	060-0057-52	3A
IC 101	051-0632-01	MPX-NC-H(1K)
IC 201	051-0285-50	TA75558S
IC 202	051-0986-00	STK4352
IC 301	051-0983-21	uPD1708AG-308-03
IC 401	051-0172-01	TC4011UBP
L 101	010-2053-00	
L 102	010-2047-86	220uH
L 103	010-2047-86	220uH
L 104	010-2047-94	1mH
Q 101	102-2458-50	2SC2458Y,GR,BL
Q 102	102-2458-50	2SC2458Y,GR,BL
Q 201	103-1450-50	2SD1450S.T
Q 202	103-1450-50	2SD1450S.T
Q 303	102-2458-50	2SC2458Y,GR,BL
Q 304	108-0369-28	2SK369GR
Q 305	125-2003-03	RN1203
Q 306	125-2003-03	RN1203
Q 401	100-1297-25	2SA1297Y
Q 402	100-1297-25	2SA1297Y
Q 403	103-2012-00	2SD2012
Q 404	125-2003-03	RN1203
Q 405	125-2003-03	RN1203
Q 406	102-1815-50	2SC1815Y,GR,BL
Q 407	100-1020-00	2SA1020
Q 408	102-2458-50	2SC2458Y,GR,BL
Q 412	102-1815-50	2SC1815Y,GR,BL
R 101	111-1041-91	1/4WS 100kohm
R 102	111-4731-91	1/4WS 47kohm
R 103	111-5621-91	1/4WS 5.6kohm
R 104	111-1031-91	1/4WS 10kohm
R 105	111-2241-91	1/4WS 220kohm
R 106	111-1011-91	1/4WS 100ohm
R 107	111-1001-91	1/4WS 10ohm
R 108	111-2231-91	1/4WS 22kohm
R 109	111-6821-91	1/4WS 6.8kohm

REF No.	PART No.	DESCRIPTION
R 110	111-1531-91	1/4WS 15kohm
R 111	111-3931-91	1/4WS 39kohm
R 112	111-5631-91	1/4WS 56kohm
R 113	111-5621-91	1/4WS 5.6kohm
R 114	111-8221-91	1/4WS 8.2kohm
R 201	111-1531-91	1/4WS 15kohm
R 202	111-1531-91	1/4WS 15kohm
R 203	111-3331-91	1/4WS 33kohm
R 204	111-3331-91	1/4WS 33kohm
R 205	111-2731-91	1/4WS 27kohm
R 206	111-1031-91	1/4WS 10kohm
R 207	111-1031-91	1/4WS 10kohm
R 208	111-2731-91	1/4WS 27kohm
R 209	111-1011-91	1/4WS 100ohm
R 210	111-3321-91	1/4WS 3.3kohm
R 211	111-3321-91	1/4WS 3.3kohm
R 212	111-1031-91	1/4WS 10kohm
R 213	111-1031-91	1/4WS 10kohm
R 214	111-1031-91	1/4WS 10kohm
R 215	111-1031-91	1/4WS 10kohm
R 218	111-1041-91	1/4WS 100kohm
R 219	111-2741-91	1/4WS 270kohm
R 220	111-1041-91	1/4WS 100kohm
R 221	111-1041-91	1/4WS 100kohm
R 222	111-3901-91	1/4WS 39ohm
R 223	111-3901-91	1/4WS 39ohm
R 224	111-1011-81	1/2WS 100ohm
R 225	111-1231-91	1/4WS 12Kohm
R 226	111-1231-91	1/4WS 12Kohm
R 227	111-4791-91	1/4WS 4.7ohm
R 228	111-4791-91	1/4WS 4.7ohm
R 301	111-2231-91	1/4WS 22kohm
R 302	111-2221-91	1/4WS 2.2kohm
R 303	111-4711-91	1/4WS 470ohm
R 304	111-2221-91	1/4WS 2.2kohm
R 305	111-1031-91	1/4WS 10kohm
R 306	111-1041-91	1/4WS 100kohm
R 307	111-4721-91	1/4WS 4.7kohm
R 308	111-4721-91	1/4WS 4.7kohm
R 401	111-4721-91	1/4WS 4.7kohm
R 402	111-2221-91	1/4WS 2.2kohm
R 403	111-1031-91	1/4WS 10kohm
R 404	111-2221-91	1/4WS 2.2kohm
R 405	111-2221-91	1/4WS 2.2kohm
R 406	111-1031-91	1/4WS 10kohm
R 407	111-1031-91	1/4WS 10kohm
R 408	111-4721-91	1/4WS 4.7kohm
R 409	111-2721-91	1/4WS 2.7kohm
R 410	111-8221-91	1/4WS 8.2kohm
R 411	111-1231-91	1/4WS 12Kohm
R 412	111-8201-81	1/2WS 82ohm
R 417	111-3941-91	1/4WS 390kohm
R 418	111-1031-91	1/4WS 10kohm
R 419	111-3941-91	1/4WS 390kohm
R 420	111-1031-91	1/4WS 10kohm
R 421	111-1221-91	1/4WS 1.2kohm
R 422	111-6821-91	1/4WS 6.8kohm
R 424	111-5621-91	1/4WS 5.6kohm
R 425	114-3301-11	1W 33ohm
R 426	111-4721-91	1/4WS 4.7kohm
R 427	111-1511-81	1/2W 150ohm
R 428	114-1511-11	1W 150ohm
SUP101	060-0122-10	DSP-201M-S00B
TC 301	004-1580-09	30pF
VR 201	012-4689-01	
X 301	061-1064-00	4.5MHz

SWITCH PWB SECTION

REF No.	PART No.	DESCRIPTION
PL 402	017-0432-00	12V 60mA
PL 403	017-0432-00	12V 60mA
S 1	513-3694-11	
S 2	513-3694-11	
S 3	513-3694-11	

REF No.	PART No.	DESCRIPTION
S 4	513-3694-11	
S 5	513-3694-11	
S 6	513-3694-11	
S 7	513-3694-11	
S 8	513-3694-11	

REF No.	PART No.	DESCRIPTION
S 9	513-3694-11	
S 10	513-3694-11	
S 11	013-3812-00	
S 12	513-3694-11	
S 13	513-3694-11	

LED PWB SECTION

REF No.	PART No.	DESCRIPTION
D 500	001-0312-22	GL8KG22
D 501	001-0312-22	GL8KG22
D 502	001-0312-22	GL8KG22
D 503	001-0312-22	GL8KG22
D 504	001-0312-22	GL8KG22
D 505	001-0312-22	GL8KG22
D 506	001-0312-22	GL8KG22

REF No.	PART No.	DESCRIPTION
D 507	001-0312-22	GL8KG22
D 508	001-0312-22	GL8KG22
D 509	001-0312-22	GL8KG22
D 510	001-0312-22	GL8KG22
D 511	001-0312-22	GL8KG22
D 512	001-0312-22	GL8KG22
D 513	001-0312-22	GL8KG22

REF No.	PART No.	DESCRIPTION
D 514	001-0312-22	GL8KG22
D 515	001-0312-22	GL8KG22
D 516	001-0312-22	GL8KG22
D 517	001-0312-22	GL8KG22
R 500	111-5611-91	1/4WS 560ohm
R 501	111-5611-91	1/4WS 560ohm
R 502	111-5611-91	1/4WS 560ohm