CLARION AM CAR RADIO

SERVICE MANUAL MODEL RE-130C.RU-130B

CLARION SHOJI CO., LTD.
NEW KOJIMACHI BLDG., 5-CHOME, KOJIMACHI, CHIYODA-KU, TOKYO, JAPAN. PHONE NO. 265-2931~4
CLARION CORPORATION OF AMERICA-HEAD OFFICE
5500 ROSECRANS AVE., LAWNDALE, CALIF., 90260, U.S.A. PHONE NO. (213)973-1100
CLARION CORPORATION OF AMERICA-NEW JERSEY BRANCH OFFICE
421 NORTH MIDLAND AVE., SADDLE BROOK, NEW JERSEY 07662, U.S.A. PHONE NO.(201)791-1200
CLARION SHOJI (EUROPA) G.m.b.H.
2000 HAMBURG 76, SCHONE AUSSICHT 35, WEST GERMANY. PHONE NO. 2207667
CLARION (HONG KONG) CO., LTD.
225 PING CHAU GALLERY OCEAN TERMINAL KOWLOON HONG KONG. PHONE NO. 3-675785

AN. PHONE NO. 265-2931~4

IO. 272-1178. 272-1169. 479-5556.

17

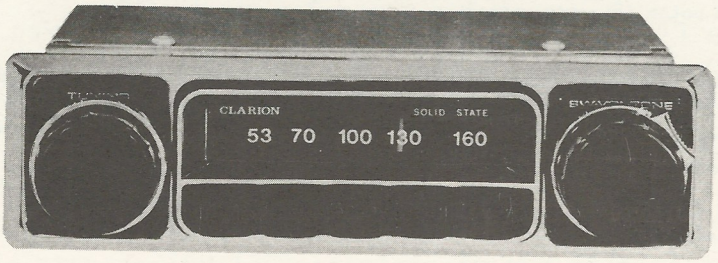

MODEL RE-130C

MODEL RU-130B

※ SPECIFICATION:

Circuit system:	Super heterodyne
Receiving frequency:	530 KHz ~ 1,605 KHz
Tuning system:	μ-tuning, 5 push-buttons
Intermediate frequency:	262.5 KHz
Maximum sensitivity:	Less than 20 dB (at 0.5W output)
Practical sensitivity:	Less than 30 dB (at 20 dB S/N)
Selectivity:	More than 20 dB (±10KHz detuned)
Image rejection ratio:	More than 57 dB
Fidelity:	100 Hz High -2±3dB [-1±3dB]
	Low +2±3dB [+3±3dB]
	400 Hz 0 dB
	400 Hz High -13±5dB
	Low -28±5dB
Load impedance:	8Ω(or 4Ω)
Power output:	More than 2.5 [More than 3.0W] (at less than 10% distortion)
Maximum output:	More than 3.5 [More than 5.0W]
Power requirements:	13.2 DC (Standard voltage) negative ground only
Current consumption:	Less than 0.5A [0.8A]
Weight:	0.9 kg
Dimensions:	160W x 50H x 80D m/m

Note: Figures within [ ] are for 4Ω load

Semiconductors: Transistors-7, diodes-2

RF amplifier	2SA355 x 1
Frequency converter	2SA354 x 1
IF amplifier	2SA353 x 1
Detector	1N34A x 1
AF amplifier	2SC458 x 1
AF amplifier	2SB77 x 1
Power amplifier	2SB367 x 2
AGC	1N34A x 1

※ COMPONENTS

(RE-130C-01)

MAIN UNIT	1 Set
280-3261-00 OWNERS GUIDE	1 Each
922-0723-00 PARTS BAG	1 Set
380-3499-00 KNOB	x 2
380-3425-00 KNOB	x 1
380-3432-00 KNOB	x 1
722-0231-00 SPECIAL NUT	x 2
745-0470-01 SPECIAL WASHER	x 2
923-0070-00 FUSE BAG	1Set
950-4961-00 PACKAGING KIT	1Set

(RU-130B-01)

MAIN UNIT	1 Set
280-3262-00 OWNERS GUIDE	1 Each
922-0723-00 PARTS BAG	1 Set
{Same as RE130C-01}	
923-0070-00 FUSE BAG	1 Set
950-4962-00 PACKAGING KIT	1 Set

✱ ADJUSTMENT

○ ADJUSTMENT OF ANTENNA TRIMMER

Antenna trimmer should be adjusted on the following occasions. It affects the sensitivity of receiver.

A. When installing the radio or after repairing it.

B. When antenna or antenna cord is replaced.

C. When car radio sensitivity is bad and noise is prominent.

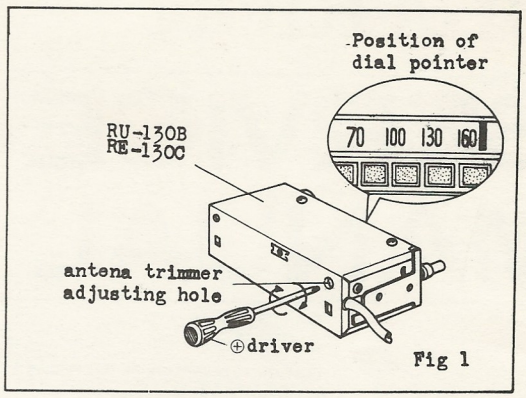

Fig 1

○ METHOD OF ADJUSTMENT

Keep volume and tone controls to maximum, set dial pointer to receive a weak broadcast near the right end of dial (1620 KHz) and adjust antenna trimmer screw for maximum volume of sound (maximum sensitivity). (Refer to Fig.1)

NOTE:

In case there is no broadcast near 1620 KHz, adjust for maximum white noise (hissing noise).

○ THE FOLLOWING EQUIPMENTS ARE NECESSARY FOR ADJUSTMENT

(a) Sweep generator

(b) Oscilloscope

(c) AM signal generator

(d) Dummy antenna (Fig.2)

(e) Dummy load or speaker

(f) Output meter (V.T.V.M)

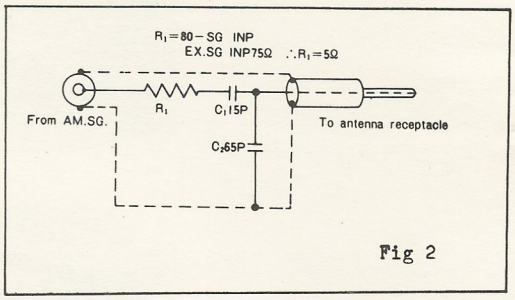

Fig 2

○ AM INTERMEDIATE FREQUENCY(IF) ADJUSTMENT

(a) Connect the output of the sweep generator to the hot terminal of the RF coil or of the RF trimmer through the approx 1 KΩ resistor. (Refer to Fig.3)

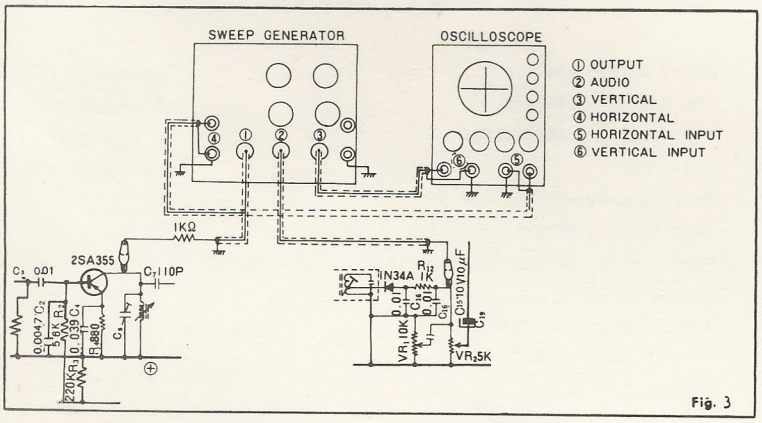

Fig. 3

(b) Connect the audio input of the sweep generator to hot terminal (White lead wire) of the volume control.

(c) Set the vertical knob of the oscilloscope to maximum, the volume control to minimum and the tone control to maximum.

(d) Set the dial pointer to highest frequency, the sweep generator to 262.5 KHz and increase the sweep output. A wave form such as that shown in Fig.4 will appear.

(e) Then adjust IFT (intermediate frequency transformer) IFT 1, IFT 2 to obtain the wave form ahown in Fig.4.

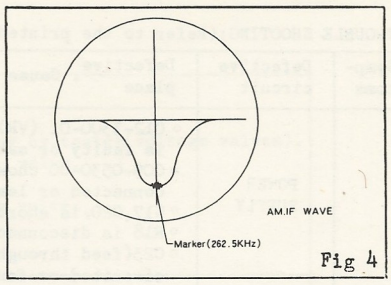

Fig 4

AM TRACKING ADJUSTMENT

(a) Set Volume control & Tone Control Maximum, and Balance control center.

(b) Connect S.S.G. Dummy Antenna & V.T.V.M as Fig.5.

(c) Set Tuning Knob to the rightest and adjust OSC Trimmer (C10) so that 1620 KHz can be received.

(d) Feed 1400 KHz from SSG and tune the unit to that frequency. Adjust Antenna Trimmer (C 1) and RF. Trimmer (C5) so that V.T.V.M points maximum.

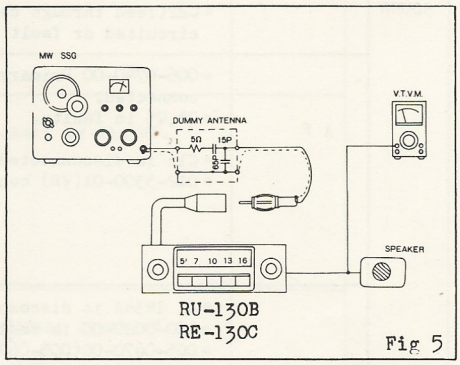

Fig 5

TROUBLE SHOOTING:(Refer to the printed circuit board and circuit diagram)

Symptoms	Defective circuit	Defective place . Cause	Checking
NO SOUND	POWER SUPPLY	○ 012-3300-01 (VR) switch contact point is faulty or setup faulty. ○ 009-0530-00 choke transformer is disconnected or lead wire solder faulty. ○ C17,C20 is short-circuited. ○ R18 is disconnected or fault soldered. ○ C23(feed through capacitor) is short-circuited or fault soldered.	○ Continuity check by tester. ○ Inspect voltages of input and output terminals of transformers. ○ Continuity check by tester. Inspect voltages of both terminals(R18). ○ Continuity check by tester.
	OUT PUT	○ Speaker voice-coil is disconnected. ○ Q6,Q7 is faulty(disconnected or short-circuited). ○ C21 is disconnected or fault soldered. ○ C22(feed through capacitor) is short-circuited or fault soldered.	○ Continuity check by tester. ○ Inspect voltage of transistor terminal. ○ Continuity check by tester. ○ Continuity check by tester.
	A F	○ 006-0740-00 Primary side is disconnected. ○ Q4,Q5 is faulty. ○ C16 is disconnected. ○ 012-3300-01(VR) contact is faulty.	○ Continuity check by tester. ○ Inspect voltage of transistor terminal. ○ Continuity check by tester. ○ Try to make signal line short-circuited to see if sound is heard. ○ If affirmative VR is faulty, sound is heard.(Cut output of detection wave and inspect valves of VR both sides)
	DETECTOR	○ D1 1N34A is disconnected. ○ 050-0020-00 is faulty. ○ 005-0670-00(005-0691-00) IFT secondary side is disconnected.	○ Continuity check by tester. ○ " ○ "
	R F . I F	○ Q1,Q2,Q3 is faulty. ○ 005-0660-00(005-0690-00)IFT 1, ○ 005-0670-00(005-0691-00)IFT 2 is disconnected. ○ Push-button synchronizor coil is disconnected.	○ Inspect voltage valve of transistor. ○ Continuity check by tester. ○ " ○ "
LOW VOLUME POOR SENSITIVITY	OUT PUT . A F	○ C16,C21 capacity drops. ○ C22 is disconnected or its capacity drops. ○ R15,R17,R19 resistance valve is changed. ○ Q4,Q5,Q6,Q7 capacity drops.	○ Inspect parts(specially condensor). ○ Inspect parts(check resistance valve by a tester). ○ Inspect voltage valves of transistors. ○ Inspect parts.
	R F . I F . DETECTOR	○ D1 1N34A capacity drops. ○ R2,R3,R4,R5,R9 resistant valve is changed or disconnected. ○ C4,C5,C11,C13 capacity drops. ○ C3,C6 capacity drops or disconnected. ○ C9 capacity is changed. ○ C1,C5,C10 voltage correction is insufficient. ○ Push-button synchronizor antenna(ANT) coil, RF coil dust-vore is broken. ○ 092-0430-01 series coil in antenna receptacle is disconnected or faulty soldered.	○ Inspect resistant valve by a tester. ○ Inspect voltage valves. ○ Inspect parts(especially condensor). ○ Inspect parts(especially condensor). ○ " ("). ○ Correct sufficiently. ○ Inspect by appearance. ○ Continuity check by tester.

DISTORTION OF SOUND	OUT PUT	○ Q6,Q7 capacity drops. ○ C16,C19 is short-circuited. ○ R20 ~ R23 is disconnected or resistant valve is changed. ○ 006-0740-00 secondary side is disconnected or short-circuited.	○ Inspect parts. Continuity check by tester(voltage valves). ○ Inspect voltage valve. ○ Inspect voltage valve.
	A F	○ R13,R14,R16 is disconnected or resistant valve changes(due to Q4,Q5 direct coupling).	○ Inspect voltage valve.
	A G C	○ R2,R11 is disconnected or resistant valve changes(at excessive input AGC will not work and cause a sound distortion). ○ C14 capacity drops or disconnected.	○ Continuity check by tester. ○ 〃
OSCILLATING	POWER SUPPLY	○ C17,C20 capacity drops(Low frequency oscillation). ○ R18 resistant valve is changed (Oscillation will be occured by power fluctuation).	○ Inspect condensor repeatedly. ○ Inspect each voltage valve.
	R F • I F	○ C12 capacity drops(Oscillation will be occured by feedback of high frequency component to AGC circuit). ○ C13 capacity drops or disconnected.	○ Inspect condensor again. ○ 〃

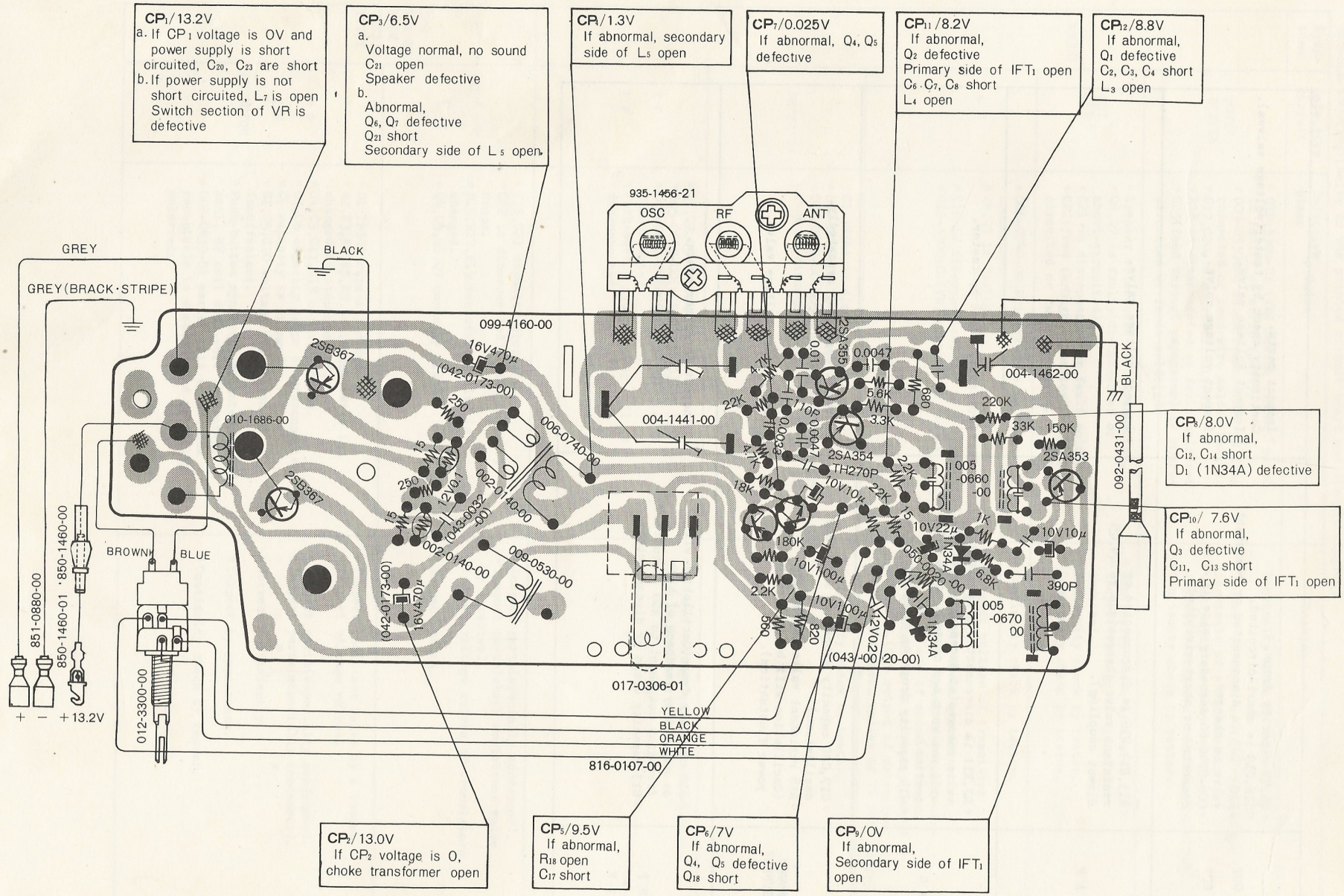

NOTE:

- CP denotes Check Point. (Voltage values are betWeen ground and that point)
- Voltage values may vary by ±10% from set to set, (excluding CP_1, CP_2)
- An easy method of checking whether the set is operating or not is to touch the printed pattern (especially at base or collector of transistors); if click sound is heard from the speaker, the set is operating. Start checking from the audio circuit and proceed on to the RF circuit.

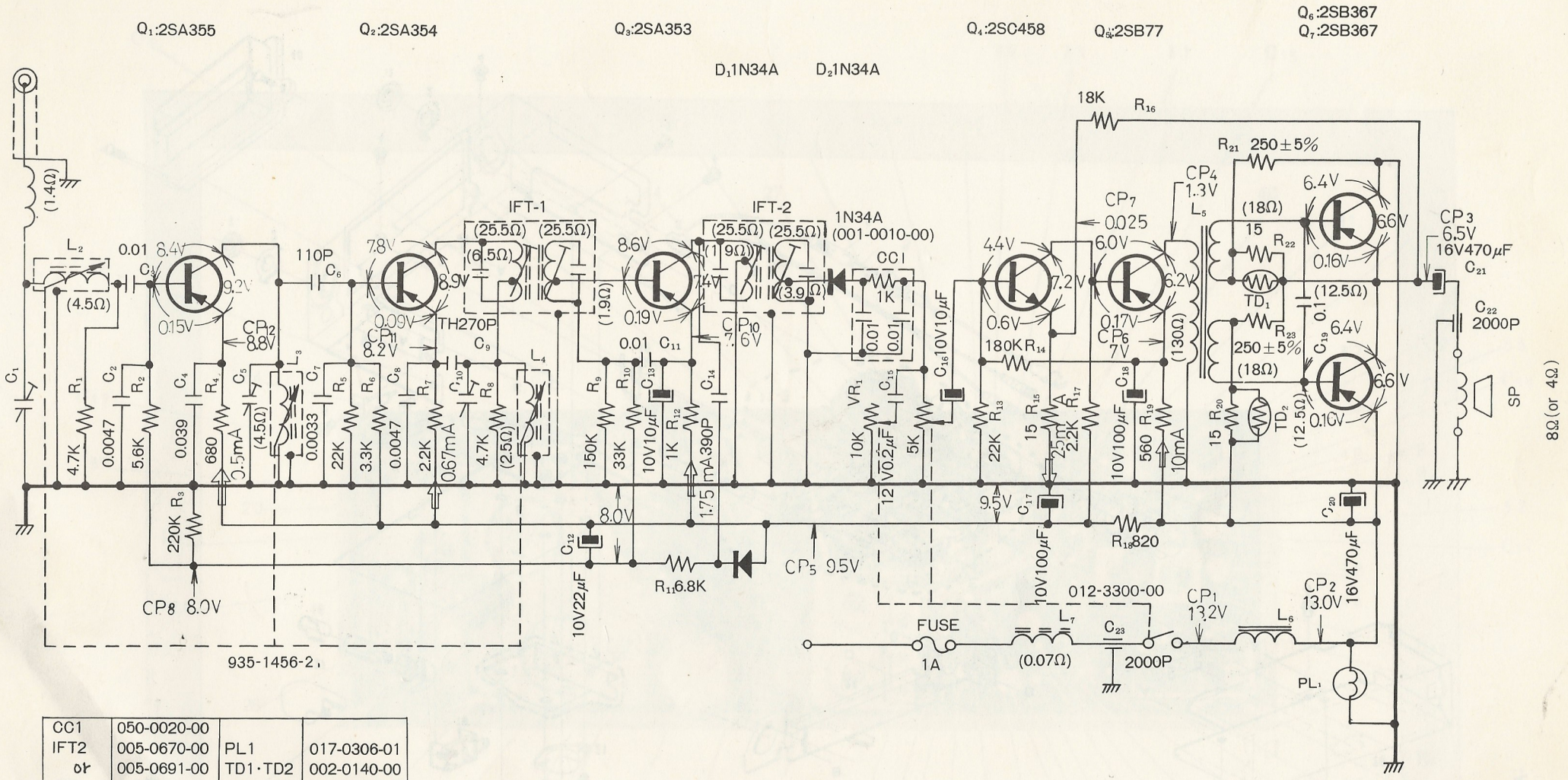

CC1	050-0020-00		
IFT2	005-0670-00	PL1	017-0306-01
or	005-0691-00	TD1・TD2	002-0140-00
IFT1	005-0660-00	C22・C23	040-0081-00
or	005-0690-00	C20・C21	042-0173-00
L7	010-1686-00	C19	043-0039-00
L6	009-0530-00	C15	043-0020-00
L5	006-0740-00	C5・C10	004-1441-00
L1	092-0431-00	C1	004-1462-00
REF.NO	PART.NO	REF.NO.	PART.NO

Note: ( ) Show direct current resistance of L and each value is measured as a simplex part respectively.
The resistance values of thermistor(s) are obtained at 25°C and the voltage and current values at no signal.
The testor used: Internal resistance 4KΩ/V

RE-130C

* EXPLODED VIEW:

⊙Maine unit

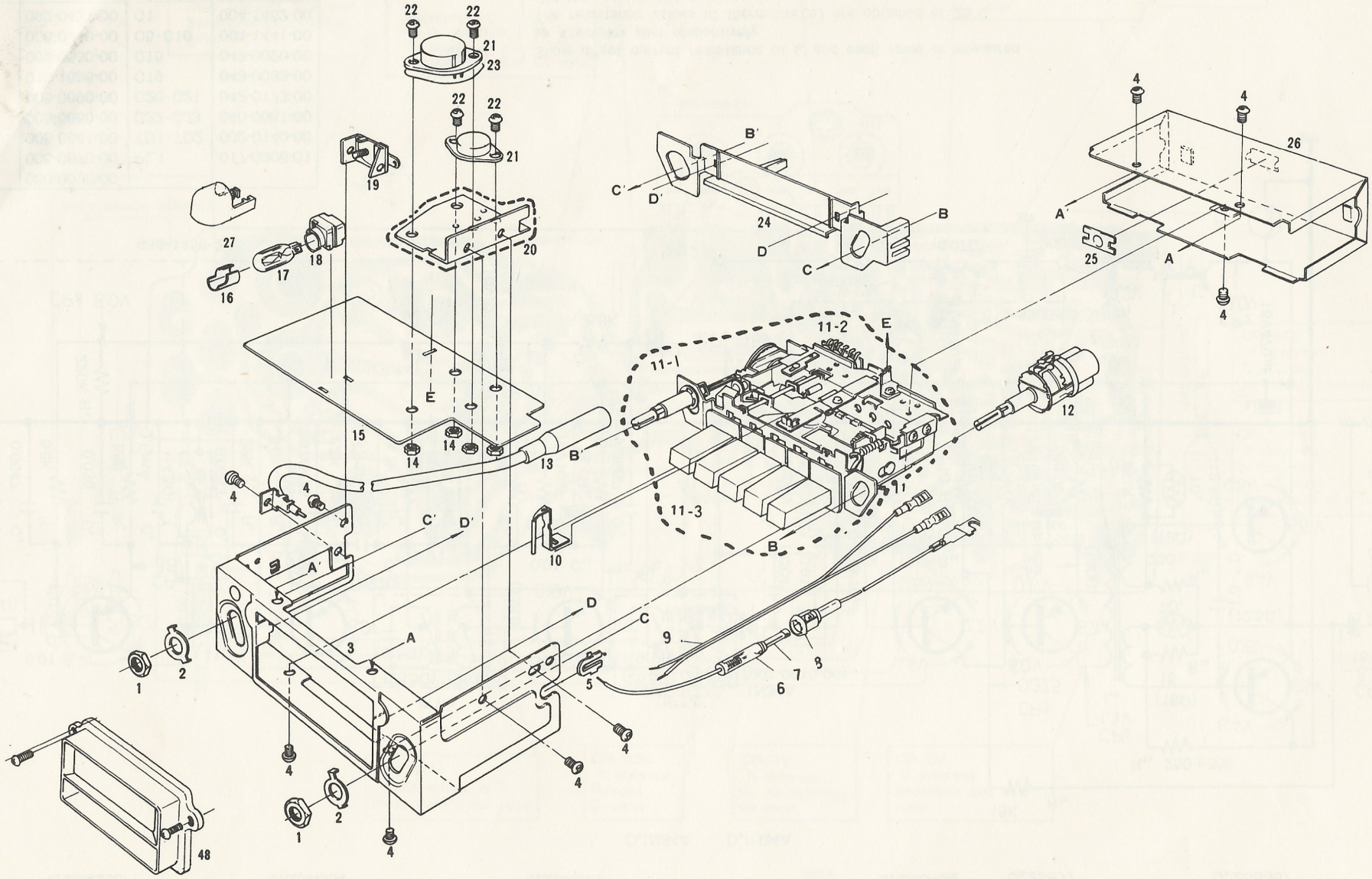

RE-130C

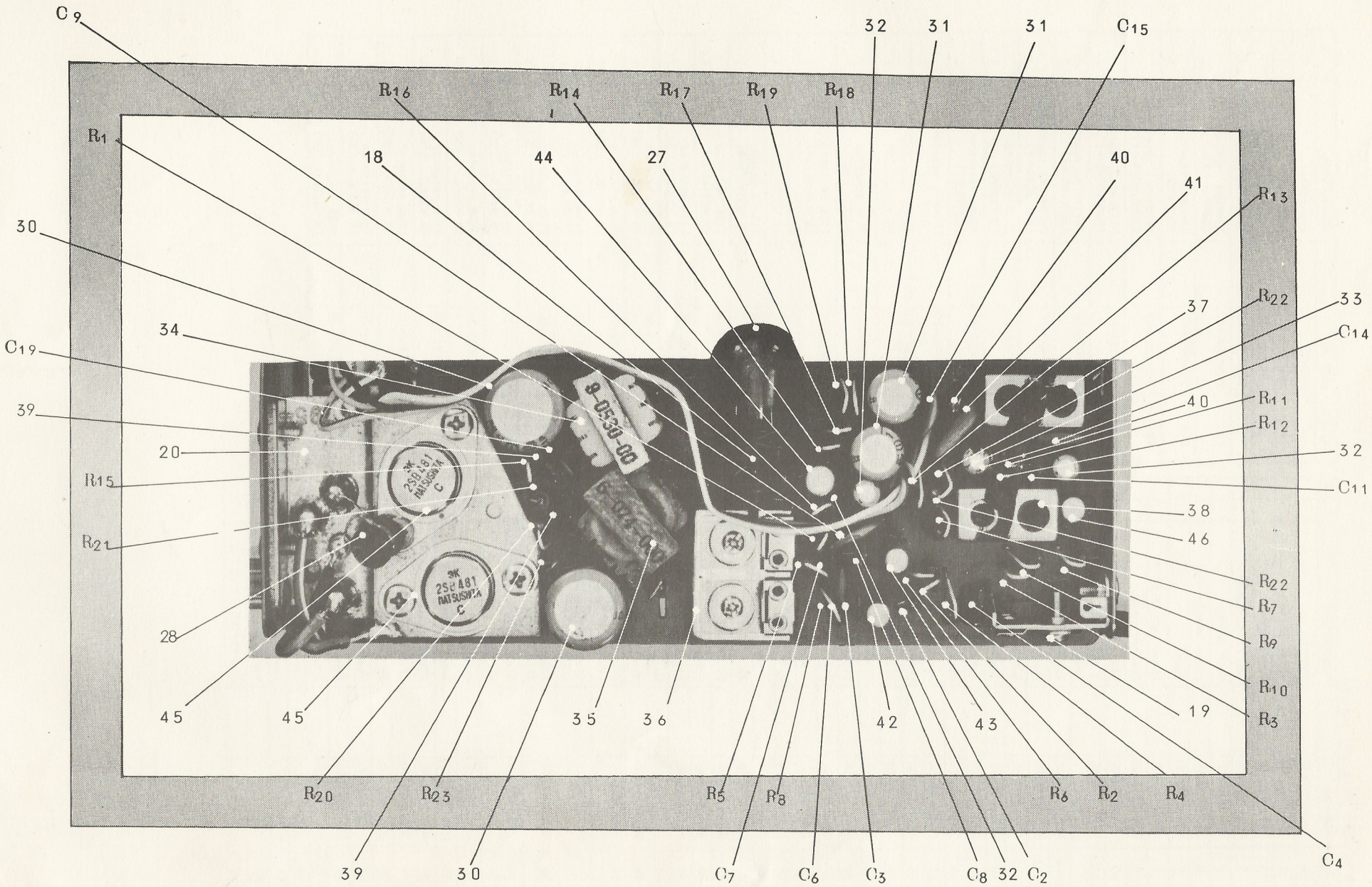
C9
R16
R14
R17
R19
R18
32
31
31
C15
R1
18
44
27
40
41
R13
30
37
R22
33
34
C14
C19
40
R11
39
R12
20
32
R15
C11
38
R21
46
R22
R7
28
R9
R10
45
45
35
36
42
43
19
R3
R20
R23
R5
R8
R6
R2
R4
C4
39
30
C7
C6
C3
C8
32
C2

※ PARTS LIST: Main unit section

REF.NO	PART NO	DESCRIPTION	P.C.S
1	722-0231-00	Special nut	2
2	330-4571-00	Joint plate	2
3	308-0742-00	Front cover	1
4	731-3006-80	Tap tite (M3x6)	9
5	335-0580-00	Cord holder	1
6	850-1460-00	Power supply cord	1
7	120-0020-00	Fuse	1
8	850-1460-01	Power supply cord	1
9	851-0880-00	Speaker cord	1
10	376-0760-00	Dial pointer	1
11	935-1456-21	3 coil push button tuner	1
11-1	965-2177-00	Tuning shaft assembly	1
11-2	965-2091-00	Tuning coil assembly	1
11-3	680-0034-00	Button	5
12	012-3300-01	Variable resistor	1
13	092-0431-00	Antenna receptacle	1
14	725-0182-00	Plate nut	4
15	099-4160-00	Printed circuit board	1
16	330-5002-00	Pilot holder	1
17	017-0306-01	Pilot lamp	1
18	070-0927-01	Pilot lamp socket	1
19	004-1462-00	Trimmer	1
20	944-0405-01	Filter assembly	1
21	2SB367	Transistor	2
22	716-0243-00	Special screw	4
23	078-0001-00	Insulater sheet	1
24	374-0651-00	Back plate	1
25	725-0161-01	Plate nut	1
26	310-0652-00	Upper case	1
27	335-0635-02	Pilot accessory	1
28	010-1686-00	Coil	1
29	816-0107-00	Special lead	1
30	042-0173-00	Special capacitor (VL16V470μF)	2
31	180-1074-22	Electrolytic Capacitor (VL10V100 μF)	2
32	180-1064-22	Electrolytic Capacitor (VL10V10 μF)	2
33	180-2264-22	Electrolytic Capacitor (VL10V22 μF)	1
34	009-0530-00	Choke	1
35	006-0740-00	Input transformer	1
36	004-1441-00	Trimmer	1
37	005-0670-00	IF-Transformer	1
38	005-0660-00	IF-Transformer	1
39	002-0140-00	Thermistor	2
40	001-0010-00	Diode	2
41	005-0020-00	Component circuit	1
42	2SA355	Transistor	1
43	2SA354	Transistor	1
44	2SB77	Transistor	1
45	2SB367	Transistor	2

REF.NO	PART NO	DESCRIPTION	P.C.S
46	2SC458	Transistor	1
47	2SA353	Transistor	1
48	940-2323-00	Escutcheon(RU-130B)	1
	940-2322-00	Escutcheon(RE-130C)	1
C15	043-0020-00	Special capacitor (12V0.2 μF)	1
C19	043-0039-00	Special capacitor (0.1 μF)	1
C7	141-3323-12	Polyestel capacitor (50V0.0033 μF)	1
C2,C8	141-4722-12	Polyestel capacitor (50V0.0047 μF)	2
C3,C11	141-1033-12	Polyestel capacitor (50V0.01 μF)	2
C4	141-3933-12	Polyestel capacitor (50V0.039 μF)	1
C6	144-1112-14	Mica capacitor (50V110PF)	1
C14	144-3912-17	Mica capacitor (50V390PF)	1
C9	156-2711-50	Ceramic capacitor (270PFTH)	1
R21,R23	110-2511-50	Solid resistor (½ W250Ω±5%)	2
R20,R22 R15	111-1501-32	Film resistor (¼ W15Ω±5%)	3
R19	111-5611-32	Film resistor (¼ W560Ω±5%)	1
R4	111-6811-32	Film resistor (¼ W680Ω±5%)	1
R18	111-8211-32	Film resistor (¼ W820Ω±5%)	1
R12	111-1021-32	Film resistor (¼ W1KΩ±5%)	1
R7,R17	111-2221-32	Film resistor (¼ W2.2KΩ ±5%)	2
R6	111-3321-32	Film resistor (¼ W3.3KΩ ±5%)	1
R1,R8	111-4721-32	Film resistor (¼ W4.7KΩ ±5%)	2
R2	111-5621-32	Film resistor (¼ W5.6KΩ ±5%)	1
R11	111-6821-32	Film resistor (¼ W6.8KΩ ±5%)	1
R16	111-1831-32	Film resistor (¼ W18KΩ ±5%)	1
R5,R13	111-2231-32	Film resistor (¼ W22KΩ ±5%)	2
R10	111-3331-32	Film resistor (¼ W33KΩ ±5%)	1
R9	111-1541-32	Film resistor (¼ W150KΩ ±5%)	1
R14	111-1841-32	Film resistor (¼ W180KΩ ±5%)	1
R3	111-2241-32	Film resistor (¼ W220KΩ ±5%)	1

AWA Clarion

SERVICE MANUAL

MODEL RU-130B-102

SUPPLEMENT TO RE-130C. RU-130B SERVICE MANUAL

Issued by Amalgamated Wireless (Australasia) Limited

MODEL RU-130B-102 is a complete kit pack produced for LEYLAND MOTOR CORPORATION OF AUSTRALIA LIMITED for the MINI range of vehicles. Leyland original equipment No. is AYG9441 and parts and service No. is HYL4403. For all electrical and mechanical information on this receiver not contained in this publication refer to CLARION SERVICE MANUAL FOR MODELS RE-130C. RU-130B.

Variations from the standard RU-130B consists in the fitting of a new escutcheon assembly.

ITEM	PART No.
Escutcheon Assembly	78033
Comprising	
Backing, Dial Scale (377-0157-00)	118877
Dial Scale	74446/001
Escutcheon, Moulded (370-2803-00)	314417

Also supplied in the kit are all necessary items for fitting the receiver in the Leyland Mini and Mini GT -

ITEM	PART No.	QUANTITY
Items not shown in Fig. 1		
Booklet, Broadcast Station List, 75321	145903	1
Booklet, Service Stations, 64389	145900	1
Booklet, Owner's Manual, 75332	145904	1
Capacitor, Suppression 1/4" Q.C. Terminal	75960/001	1
Capacitor, Suppression 1/4" Q.C. Terminal (Insulated)	75960/006	1
Grommet, RG104	389104	1
Pamphlet, Installation Inst. 77342	549951	1
Screw, No. 8 x 3/8" S/T	760555	1
Washer	461	1

The remaining kit items and associated Fig. 1 are continued on next page.

Kit Parts Continued:

ITEM	PART No.	QUANTITY	LOCATION
Knob Assembly	74516/001	2	1
Knob Rear	74499/002	2	2
Nut, M9 Hex 722-0231-00	491890	2	3
Speaker Ass'y 150 x 100 4Ω	77197/001	1	4
Washer, 5BA	463	4	5
Screw, No. 6 x 9,5	760379	4	6
Bracket, Rear	74465	1	7
Nut, Speed SNU-686-17-0	492084	1	8
Screw, No. 8 x 12,7 S/T	760579	1	9
Washer, 2BA	462	1	10
Screw, Hex 2BA x 1"	75948	1	11
Washer	461	1	12
Nut, Speed SNU 0524	492017	2	13
Cover, Body	74945	1	14
Screw, M5 x 10 Double Sems	778107	1	15
Screw, No. 6 x 6,35 Bk. Ox.	760362	6	16
Washer, 1/32"	3960	2	17
Washer, 1/16"	16450	2	18
Washer, 1/8"	64758	2	19
Panel, Front	74944/002	1	20
Screw, M4,2 x 13 S/T Bk/Ox.	700650	2	21
Plate, Knob Backing 74948	578549	2	22

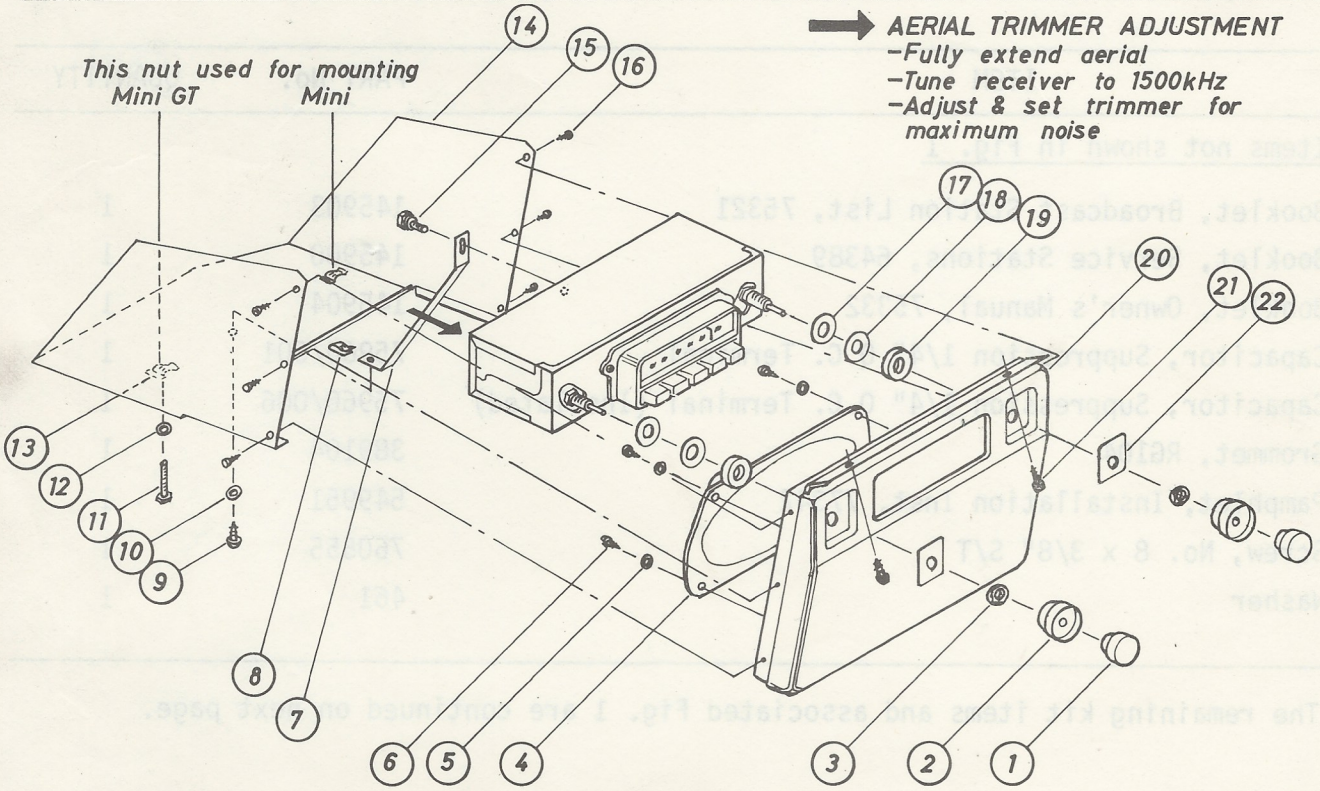

FIG. 1

CR1424