POWER
MENU
SOURCE
SEL
NUMBER
VOL
MUTE
#
1
2
3
RAND
SCAN
REP
4
5
6
7
8
9
BAND
0
DISP
SET
Panasonic
Car Audio

MXE
B.HOLD
MP3/WMA
Panasonic
CQ-C3400U
OPEN
PWR
VOLUME
PUSH
SEL
SOURCE
LEVEL
TUNE
TRACK
DISP
DISC/FOLDER
SCROLL
RANDOM
SCAN
REPEAT
D-M
MUTE
1
2
3
4
5
6
BAND
APM

(CQ-C3400U)

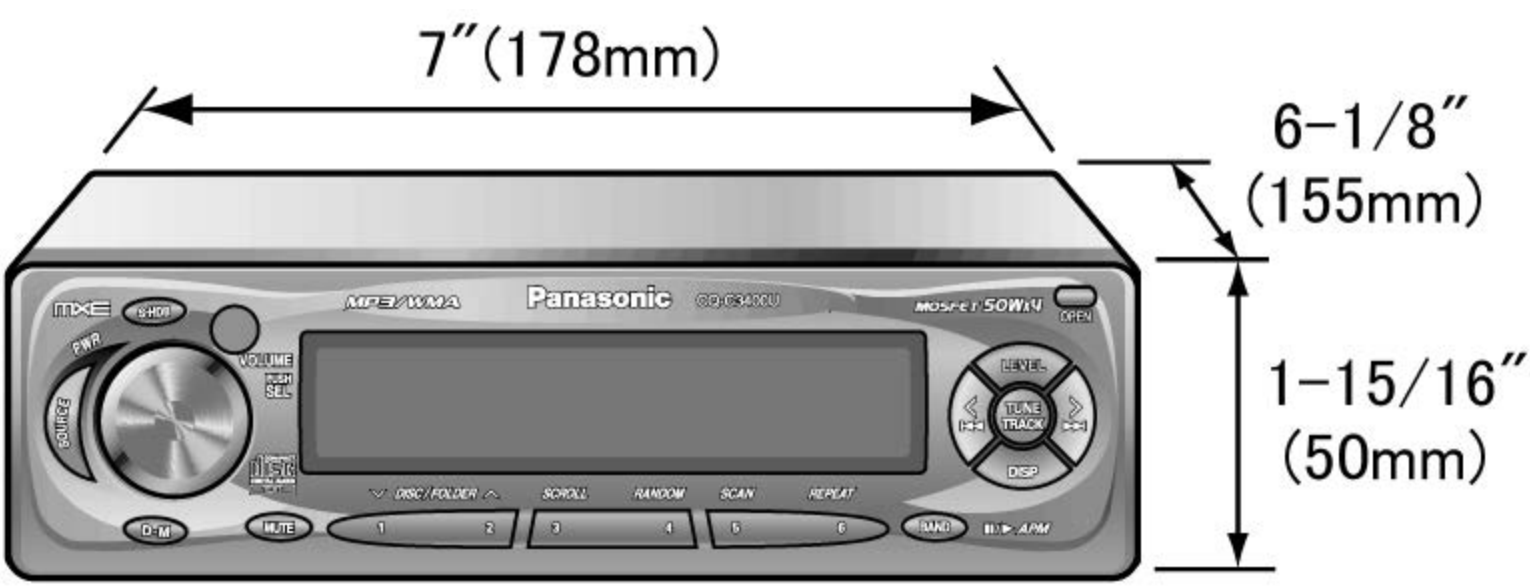
7″(178mm)
6-1/8″
(155mm)
1-15/16″
(50mm)
Panasonic
CQ-C3400U
MP3/WMA
MOSFET 50W×4
OPEN
PWR
SOURCE
VOLUME
PUSH SEL
LEVEL
TUNE TRACK
DISP
DISC/FOLDER
SCROLL
RANDOM
SCAN
REPEAT
D-M
MUTE
BAND
A.PM

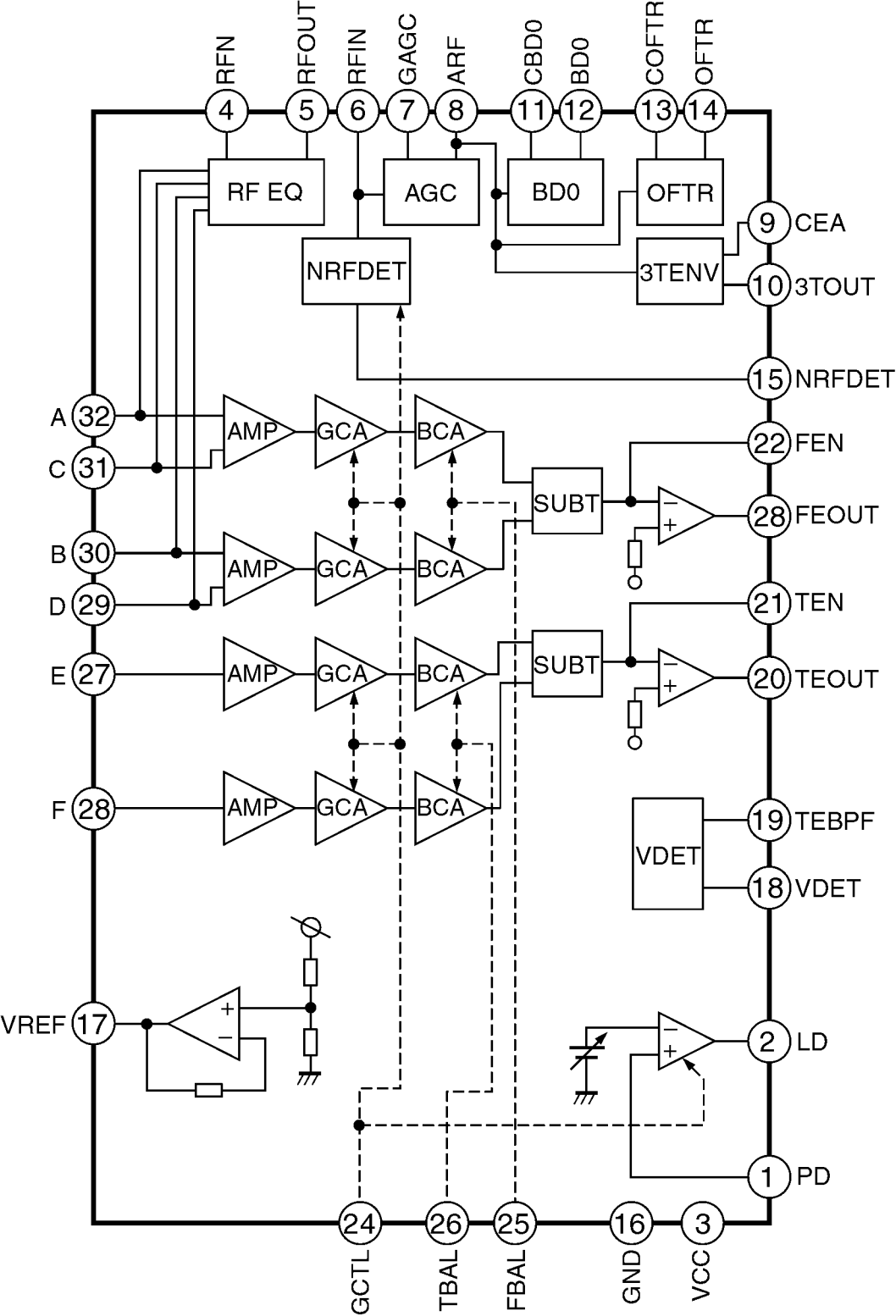
RFN
RFOUT
RFIN
GAGC
ARF
CBD0
BD0
COFTR
OFTR
4
5
6
7
8
11
12
13
14
RF EQ
AGC
BD0
OFTR
NRFDET
3TENV
9 CEA
10 3TOUT
15 NRFDET
A 32
C 31
B 30
D 29
E 27
F 28
AMP
GCA
BCA
SUBT
22 FEN
28 FEOUT
21 TEN
20 TEOUT
VDET
19 TEBPF
18 VDET
VREF 17
2 LD
1 PD
24 GCTL
26 TBAL
25 FBAL
16 GND
3 VCC

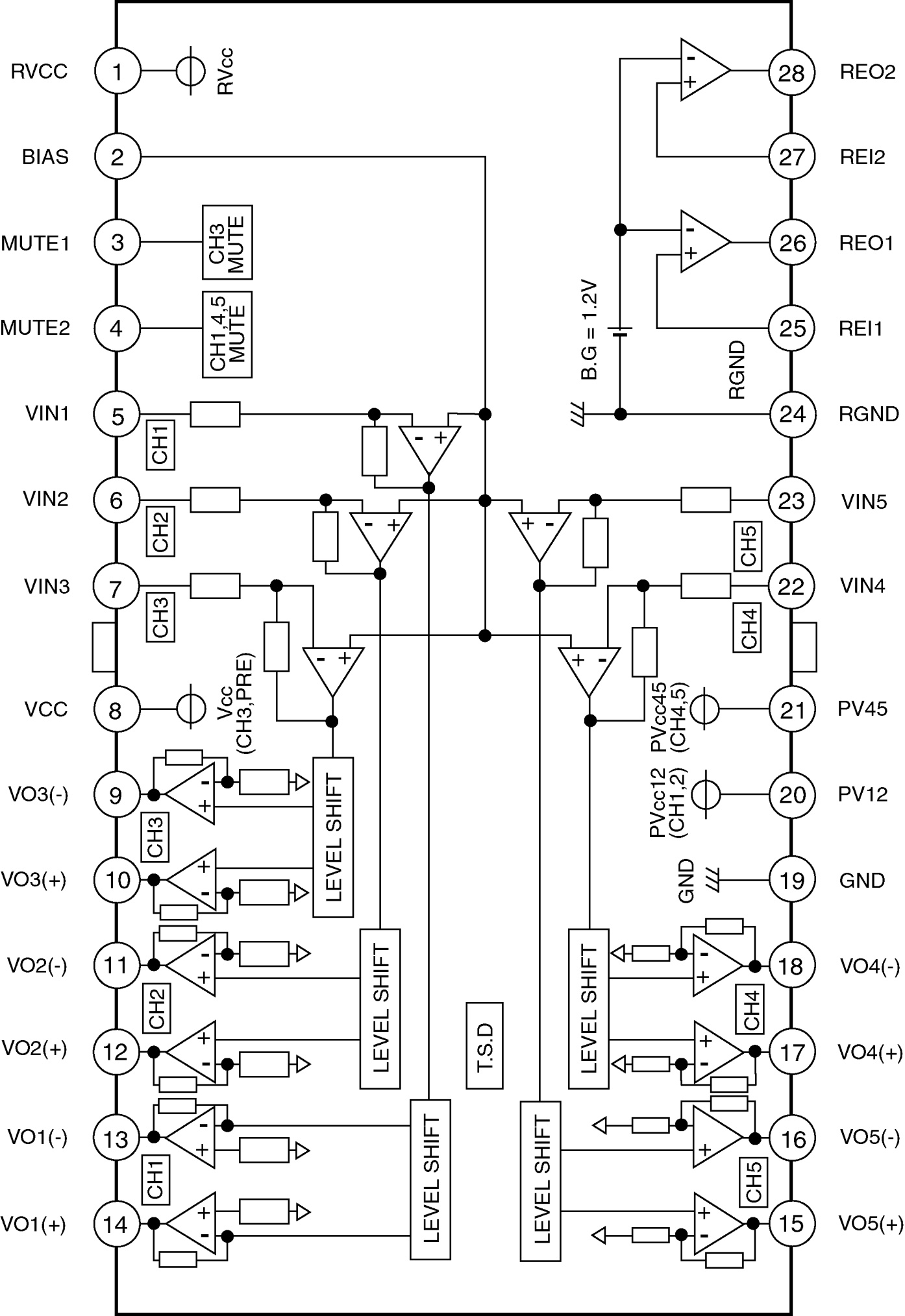
RVCC
1
RVcc
BIAS
2
MUTE1
3
CH3 MUTE
MUTE2
4
CH1,4,5 MUTE
VIN1
5
CH1
VIN2
6
CH2
VIN3
7
CH3
VCC
8
Vcc (CH3,PRE)
VO3(-)
9
CH3
VO3(+)
10
LEVEL SHIFT
VO2(-)
11
CH2
VO2(+)
12
LEVEL SHIFT
VO1(-)
13
CH1
VO1(+)
14
LEVEL SHIFT
T.S.D
LEVEL SHIFT
LEVEL SHIFT
B.G = 1.2V
RGND
28
REO2
27
REI2
26
REO1
25
REI1
24
RGND
23
VIN5
CH5
22
VIN4
CH4
21
PV45
PVcc45 (CH4,5)
20
PV12
PVcc12 (CH1,2)
19
GND
GND
18
VO4(-)
CH4
17
VO4(+)
16
VO5(-)
CH5
15
VO5(+)

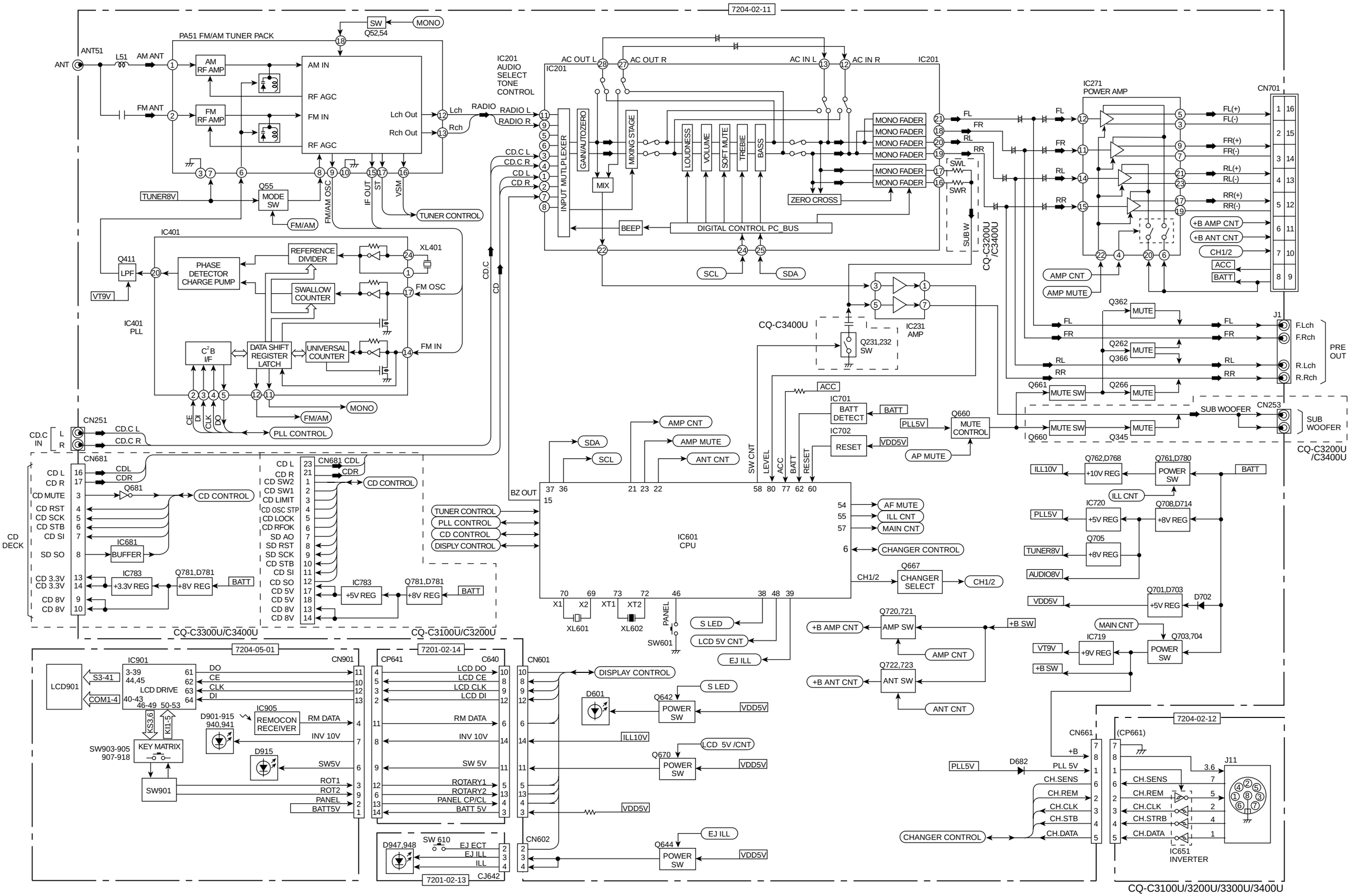

7204-02-11
PA51 FM/AM TUNER PACK
ANT51
ANT
L51
AM ANT
FM ANT
AM RF AMP
FM RF AMP
AM IN
RF AGC
FM IN
RF AGC
Lch Out
Rch Out
Lch
Rch
SW
MONO
Q52,54
TUNER8V
Q55
MODE SW
FM/AM
FM/AM OSC
IF OUT
ST
VSM
TUNER CONTROL
IC201 AUDIO SELECT TONE CONTROL
IC201
AC OUT L
AC OUT R
AC IN L
AC IN R
RADIO
RADIO L
RADIO R
CD.C L
CD.C R
CD L
CD R
INPUT MUTLPLEXER
GAIN/AUTOZERO
MIX
MIXING STAGE
LOUDNESS
VOLUME
SOFT MUTE
TREBLE
BASS
MONO FADER
ZERO CROSS
BEEP
DIGITAL CONTROL PC_BUS
SCL
SDA
SWL
SWR
SUB W
CQ-C3200U /C3400U
IC271 POWER AMP
CN701
FL(+)
FL(-)
FR(+)
FR(-)
RL(+)
RL(-)
RR(+)
RR(-)
+B AMP CNT
+B ANT CNT
CH1/2
ACC
BATT
AMP CNT
AMP MUTE
IC401
Q411
LPF
VT9V
PHASE DETECTOR CHARGE PUMP
REFERENCE DIVIDER
XL401
SWALLOW COUNTER
FM OSC
IC401 PLL
C²B I/F
DATA SHIFT REGISTER LATCH
UNIVERSAL COUNTER
FM IN
CE
DI
CLK
DO
PLL CONTROL
CD.C
CD
CN251
CD.C IN
L
R
CN681
CD L
CD R
CD MUTE
CD RST
CD SCK
CD STB
CD SI
SD SO
CD 3.3V
CD 3.3V
CD 8V
CD 8V
CDL
CDR
Q681
CD CONTROL
IC681
BUFFER
IC783
+3.3V REG
Q781,D781
+8V REG
BATT
CD DECK
CN681 CDL
CDR
CD SW2
CD SW1
CD LIMIT
CD OSC STP
CD LOCK
CD RFOK
SD AO
SD RST
SD SCK
CD STB
CD SI
CD SO
CD 5V
CD 5V
CD 8V
CD 8V
IC783
+5V REG
Q781,D781
+8V REG
BATT
CQ-C3300U/C3400U
CQ-C3100U/C3200U
CQ-C3400U
Q231,232 SW
IC231 AMP
Q362
MUTE
Q262
Q366
Q661
MUTE SW
Q266
J1
F.Lch
F.Rch
R.Lch
R.Rch
PRE OUT
SUB WOOFER
CN253
Q660
Q345
CQ-C3200U /C3400U
IC701
BATT DETECT
IC702
RESET
PLL5V
VDD5V
Q660
MUTE CONTROL
AP MUTE
AMP CNT
AMP MUTE
ANT CNT
SW CNT
LEVEL
ACC
BATT
RESET
BZ OUT
TUNER CONTROL
PLL CONTROL
CD CONTROL
DISPLY CONTROL
IC601 CPU
AF MUTE
ILL CNT
MAIN CNT
CHANGER CONTROL
CH1/2
Q667
CHANGER SELECT
X1
X2
XT1
XT2
XL601
XL602
PANEL
SW601
S LED
LCD 5V CNT
EJ ILL
Q720,721
AMP SW
+B AMP CNT
+B SW
AMP CNT
Q722,723
ANT SW
+B ANT CNT
ANT CNT
Q762,D768
+10V REG
Q761,D780
POWER SW
ILL10V
ILL CNT
IC720
+5V REG
Q708,D714
+8V REG
PLL5V
Q705
+8V REG
TUNER8V
AUDIO8V
Q701,D703
+5V REG
D702
VDD5V
MAIN CNT
IC719
+9V REG
Q703,704
POWER SW
VT9V
+B SW
7204-05-01
IC901
LCD901
S3-41
COM1-4
LCD DRIVE
DO
CE
CLK
DI
CN901
KS3,6
KI1-5
KEY MATRIX
SW903-905
907-918
SW901
IC905
REMOCON RECEIVER
D901-915
940,941
D915
RM DATA
INV 10V
SW5V
ROT1
ROT2
PANEL
BATT5V
7201-02-14
CP641
C640
LCD DO
LCD CE
LCD CLK
LCD DI
RM DATA
INV 10V
SW 5V
ROTARY1
ROTARY2
PANEL CP/CL
BATT 5V
CN601
DISPLAY CONTROL
D601
Q642
POWER SW
S LED
VDD5V
ILL10V
Q670
POWER SW
LCD 5V /CNT
VDD5V
VDD5V
CN602
Q644
POWER SW
EJ ILL
VDD5V
D947,948
SW 610
EJ ECT
EJ ILL
ILL
CJ642
7201-02-13
7204-02-12
CN661
(CP661)
+B
PLL5V
D682
PLL 5V
CH.SENS
CH.REM
CH.CLK
CH.STB
CH.DATA
CHANGER CONTROL
J11
IC651 INVERTER
CQ-C3100U/3200U/3300U/3400U

OPTICAL PICK UP

A
B
E
F
PD
LD
I-V AMP

FOCUS COIL
TRACKIG COIL
SLED MOTOR
SPINDLE MOTOR

CN102
DSP3.3V

IC1
RF AMP,ERROR AMP

RF EQ
GCA/BCA
SUBT
NRF DET
AGC
3TENV
BDO
OFTR

LD DRIVE
Q101

IC203
COIL/MOTER DRIVE
FOCUS COIL DRIVE
TRACKING COIL DRIVE
SLED MOTER DRIVE
SPINDLE MOTER DRIVE

IC201
DSP

ARF
RE ENV
OFT
RF DET
FE
TE
BDO
TBAL
FBAL
LDON
FOD
KICK
TRD
TRV
TVD
ECM
ECS
MUTE
REO2

SERVO TIM. GEN.
A/D CONV
INPUT
SERVO CTL

+3.3V REG
Q201

EFM DEMOD
16K SRAM
ATT
DE-EMPH, OVER-SAMPL
DAC
Lch
Rch

IC204
BUFFER

CN101

SEL
SUB CODE BUFF
U-COM I/F
VOC

IC401
CPU
MDATA
MLD
MCLK
SRDATA
LRCK
BCLK
BLKCK
SQCK
SUBQ
M DATA
STAT
CLK ENA
CLK2
X1
X2
X401
IC409
BUFF
RST

8V
3.3V

CD MUTE
CD SCK
CD ON
CD SI
CD SO
CD RST

IC411
REG
CVDD

SW1
SW2
RESET

IC402
FLASH MEMORY
FLASH MEMORY
X DECODE
Y DECODE
ADDRESS BUFFER LATCH
I/O BUFFER LATCH
A0–A18
D0–D15
LOGIC
WE
OE
IC406
DECODER
F/W
MSTRB

CDM-007

3032-14-07

OPTICAL PICK-UP

IC1 RF AMP , DIGITAL SERVO , DIGITAL SIGNAL PROCESSOR

CN2

VCC 5V

A
B
E
F
PD
LD

I-V AMP

RF EQ

FOCUS ERROR

EFM DEMOD

D/A CONV

TRACKING ERRO R

SERVO CTL

I/F

OSC

X1

LD DRIVE 5V

FD TD SD MD

CN1

LOUT ROUT LOCK RST AO STB SCK SO SI RFOK XTALEN

Lch Rch LOCK RST AC STB SCK DSP SO DSP SI RFOK XTALEN

IC2 COIL / MOTOR DRIVE

FOCUS COIL

TRACKING COIL

F- F+ T- T+

FOCUS COIL DRIVE

TRACKING COIL DRIVE

SLED MOTOR

SPINDLE MOTOR

SL- SL+ SP- SP+

SLED MOTOR DRIVE

SPINDLE MOTOR DRIVE

7V 5V

SW1 SW1 SW1 SW1

LIMIT SW SW2 SW1

To 7204-02-11 CN681

CDM-014

CQ-C3100U/C3200U CD Deck Block

Printed in Japan (K) 2003.12
(Recycled Paper)

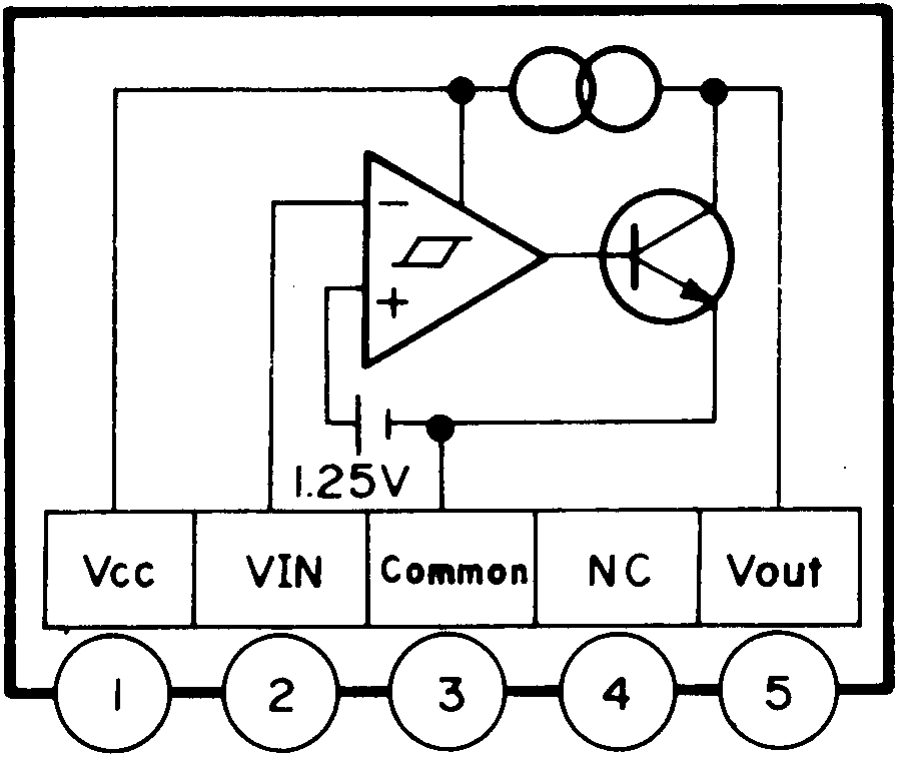
1.25V
Vcc
VIN
Common
NC
Vout
1
2
3
4
5

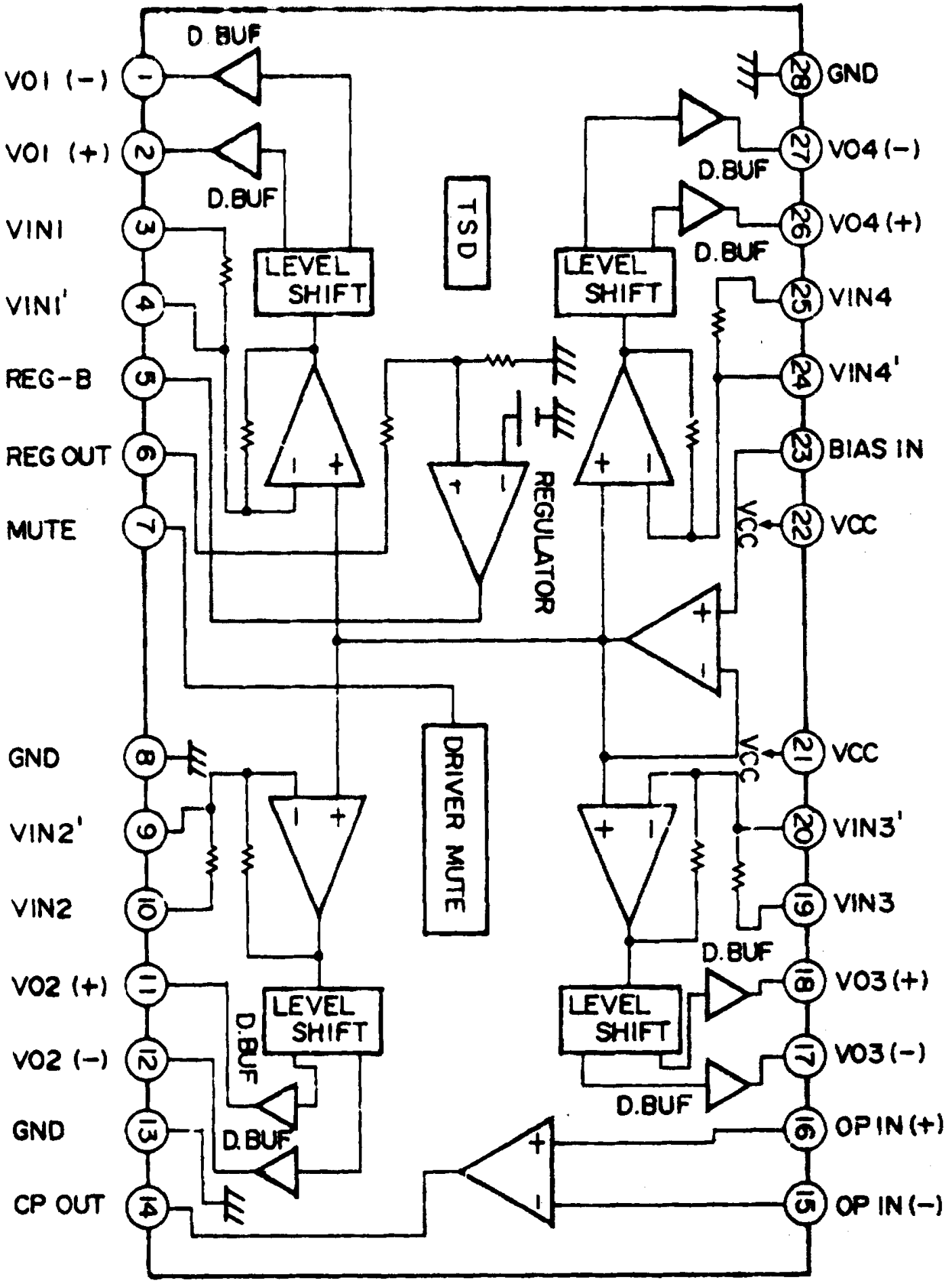
VO1 (-)
VO1 (+)
VIN1
VIN1'
REG-B
REG OUT
MUTE
GND
VIN2'
VIN2
VO2 (+)
VO2 (-)
GND
CP OUT
D. BUF
D.BUF
LEVEL SHIFT
TSD
REGULATOR
DRIVER MUTE
VCC
GND
VO4 (-)
VO4 (+)
VIN4
VIN4'
BIAS IN
VCC
VCC
VIN3'
VIN3
VO3 (+)
VO3 (-)
OP IN (+)
OP IN (-)

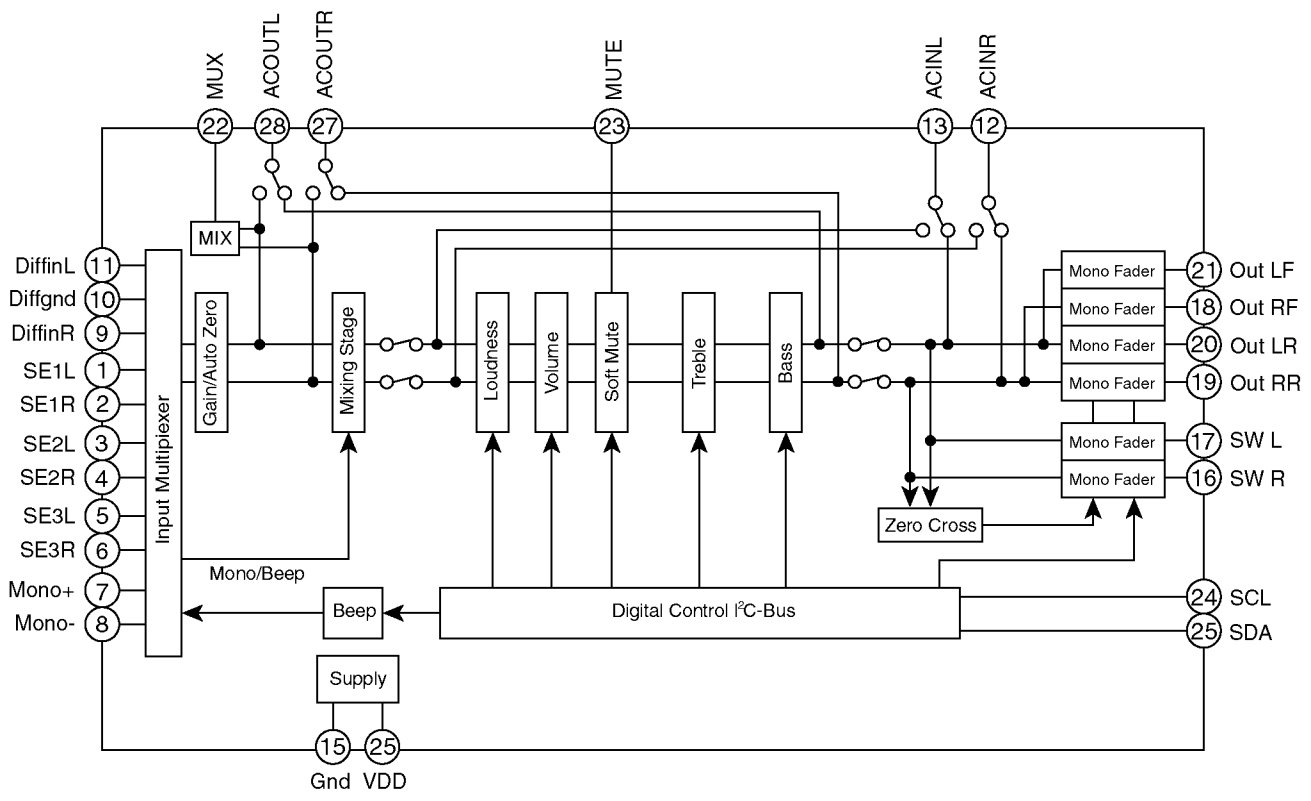
MUX
ACOUTL
ACOUTR
MUTE
ACINL
ACINR
22
28
27
23
13
12
MIX
DiffinL
Diffgnd
DiffinR
SE1L
SE1R
SE2L
SE2R
SE3L
SE3R
Mono+
Mono-
11
10
9
1
2
3
4
5
6
7
8
Input Multipiexer
Gain/Auto Zero
Mixing Stage
Loudness
Volume
Soft Mute
Treble
Bass
Mono Fader
Mono Fader
Mono Fader
Mono Fader
Mono Fader
Mono Fader
21
18
20
19
17
16
Out LF
Out RF
Out LR
Out RR
SW L
SW R
Zero Cross
Mono/Beep
Beep
Digital Control I²C-Bus
24
25
SCL
SDA
Supply
15
25
Gnd
VDD

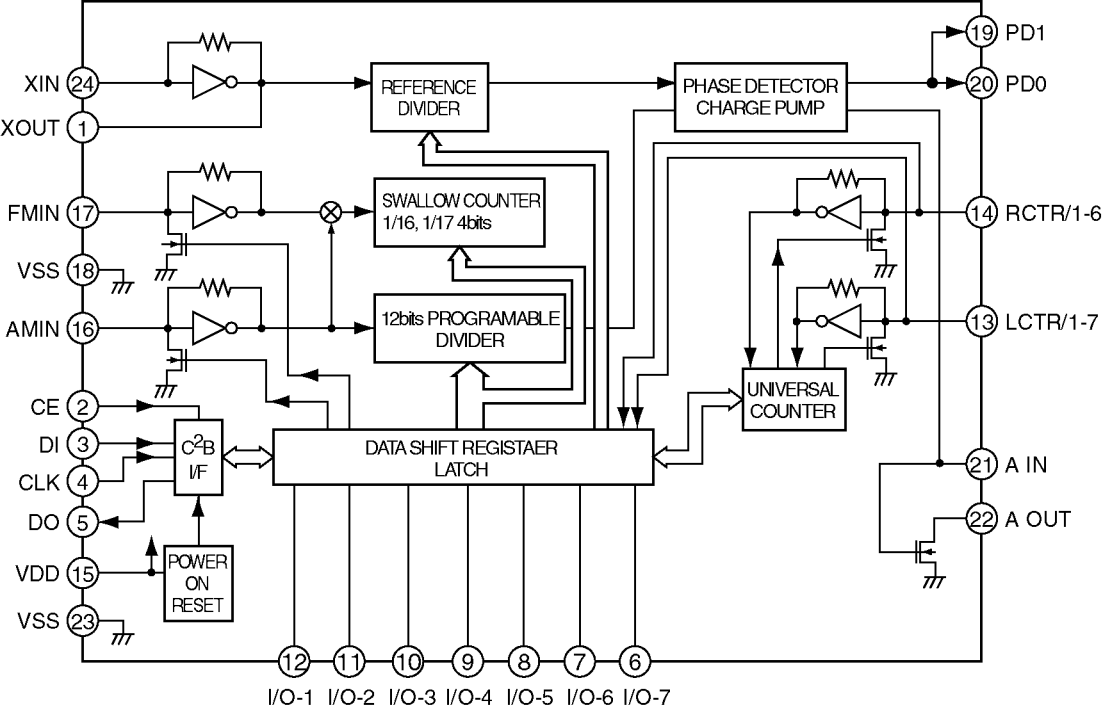
XIN 24
XOUT 1
FMIN 17
VSS 18
AMIN 16
CE 2
DI 3
CLK 4
DO 5
VDD 15
VSS 23
REFERENCE DIVIDER
PHASE DETECTOR CHARGE PUMP
SWALLOW COUNTER 1/16, 1/17 4bits
12bits PROGRAMABLE DIVIDER
C2B I/F
DATA SHIFT REGISTAER LATCH
POWER ON RESET
UNIVERSAL COUNTER
19 PD1
20 PD0
14 RCTR/1-6
13 LCTR/1-7
21 A IN
22 A OUT
12 I/O-1
11 I/O-2
10 I/O-3
9 I/O-4
8 I/O-5
7 I/O-6
6 I/O-7

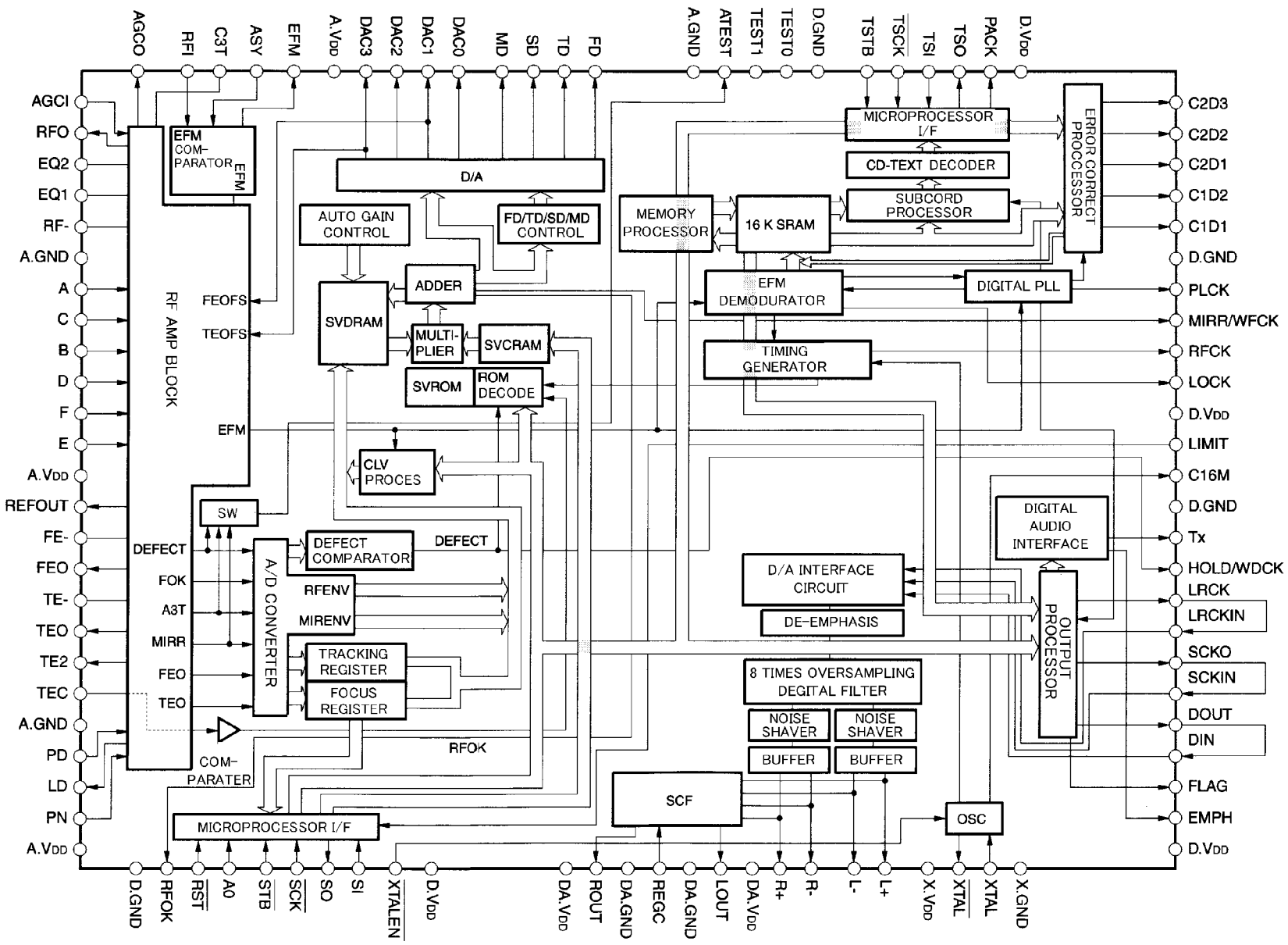
AGCO
RFI
C3T
ASY
EFM
A.VDD
DAC3
DAC2
DAC1
DAC0
MD
SD
TD
FD
A.GND
ATEST
TEST1
TEST0
D.GND
TSTB
TSCK
TSI
TSO
PACK
D.VDD
AGCI
RFO
EQ2
EQ1
RF-
A.GND
A
C
B
D
F
E
A.VDD
REFOUT
FE-
FEO
TE-
TEO
TE2
TEC
A.GND
PD
LD
PN
A.VDD
C2D3
C2D2
C2D1
C1D2
C1D1
D.GND
PLCK
MIRR/WFCK
RFCK
LOCK
D.VDD
LIMIT
C16M
D.GND
Tx
HOLD/WDCK
LRCK
LRCKIN
SCKO
SCKIN
DOUT
DIN
FLAG
EMPH
D.VDD
RF AMP BLOCK
EFM COM-PARATOR
EFM
FEOFS
TEOFS
EFM
DEFECT
FOK
A3T
MIRR
FEO
TEO
COM-PARATER
RFOK
A/D CONVERTER
DEFECT COMPARATOR
DEFECT
RFENV
MIRENV
TRACKING REGISTER
FOCUS REGISTER
SW
CLV PROCES
D/A
AUTO GAIN CONTROL
FD/TD/SD/MD CONTROL
ADDER
SVDRAM
MULTI-PLIER
SVCRAM
SVROM
ROM DECODE
MICROPROCESSOR I/F
MEMORY PROCESSOR
16 K SRAM
MICROPROCESSOR I/F
CD-TEXT DECODER
SUBCORD PROCESSOR
ERROR CORRECT PROCESSOR
EFM DEMODURATOR
DIGITAL PLL
TIMING GENERATOR
DIGITAL AUDIO INTERFACE
D/A INTERFACE CIRCUIT
DE-EMPHASIS
OUTPUT PROCESSOR
8 TIMES OVERSAMPLING DEGITAL FILTER
NOISE SHAVER
NOISE SHAVER
BUFFER
BUFFER
SCF
OSC
D.GND
RFOK
RST
A0
STB
SCK
SO
SI
XTALEN
D.VDD
DA.VDD
ROUT
DA.GND
REGC
DA.GND
LOUT
DA.VDD
R+
R-
L-
L+
X.VDD
XTAL
XTAL
X.GND

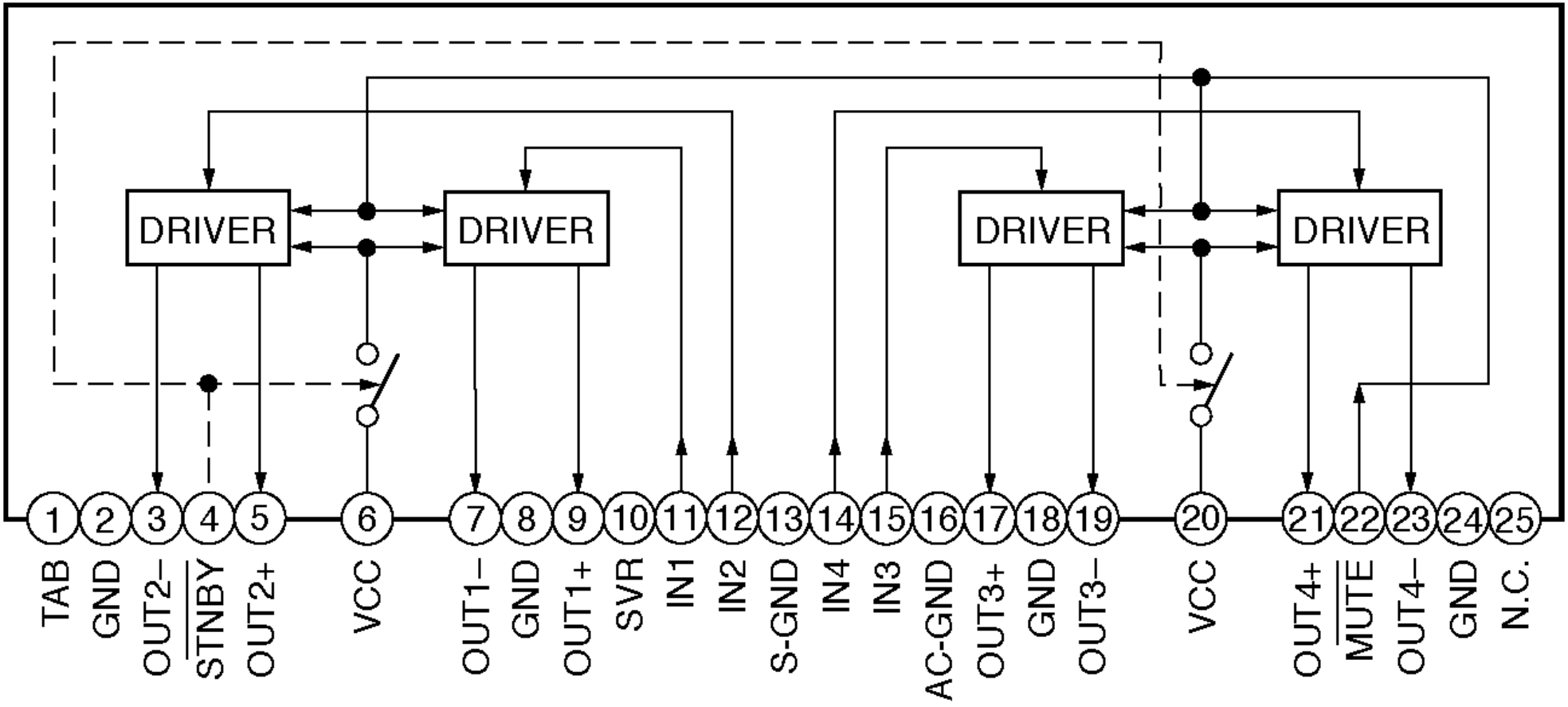
DRIVER
DRIVER
DRIVER
DRIVER
1 TAB
2 GND
3 OUT2–
4 STNBY
5 OUT2+
6 VCC
7 OUT1–
8 GND
9 OUT1+
10 SVR
11 IN1
12 IN2
13 S-GND
14 IN4
15 IN3
16 AC-GND
17 OUT3+
18 GND
19 OUT3–
20 VCC
21 OUT4+
22 MUTE
23 OUT4–
24 GND
25 N.C.

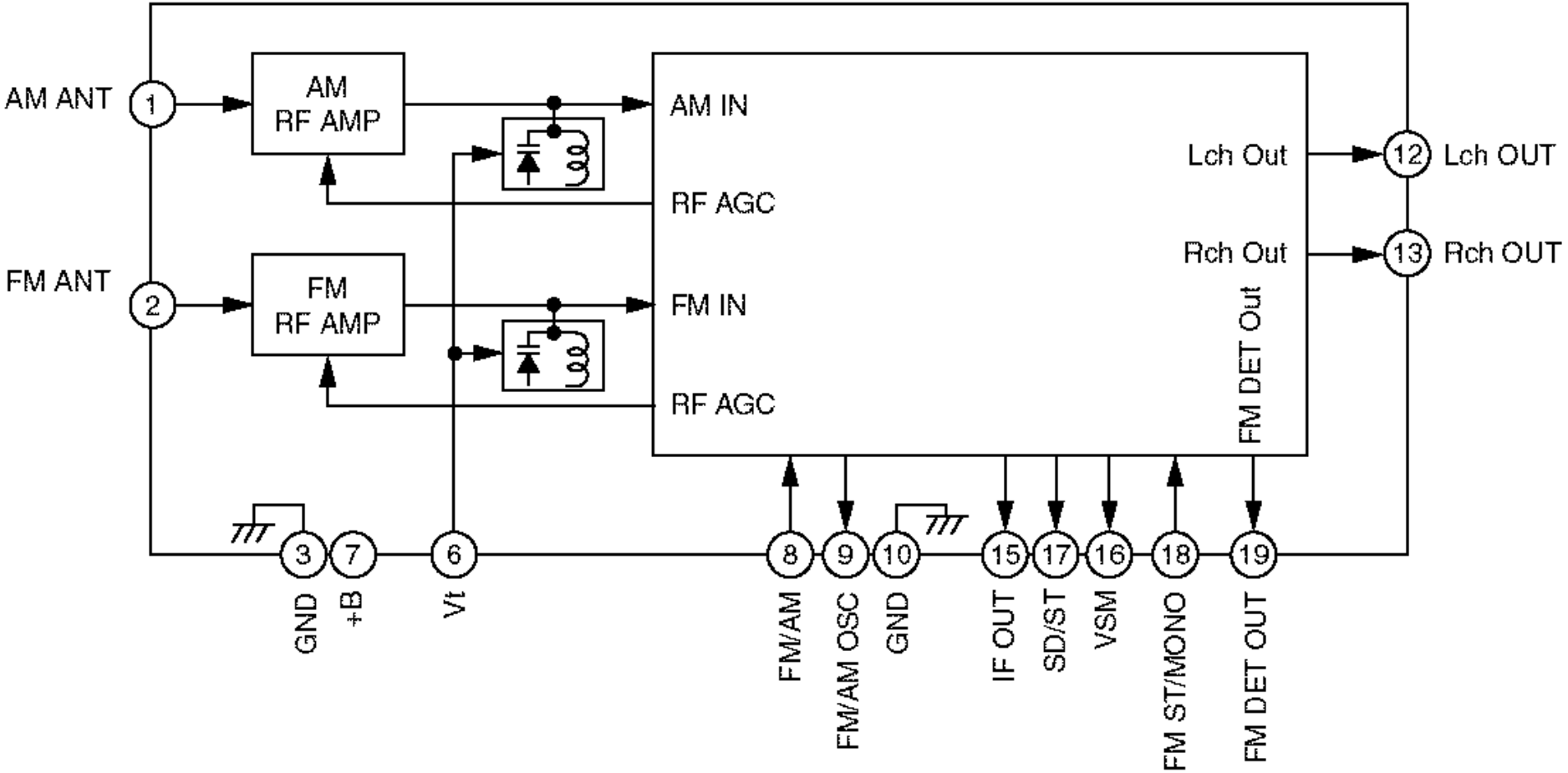
AM ANT
1
AM
RF AMP
FM ANT
2
FM
RF AMP
AM IN
RF AGC
FM IN
RF AGC
Lch Out
Rch Out
FM DET Out
12
Lch OUT
13
Rch OUT
3
GND
7
+B
6
Vt
8
FM/AM
9
FM/AM OSC
10
GND
15
IF OUT
17
SD/ST
16
VSM
18
FM ST/MONO
19
FM DET OUT

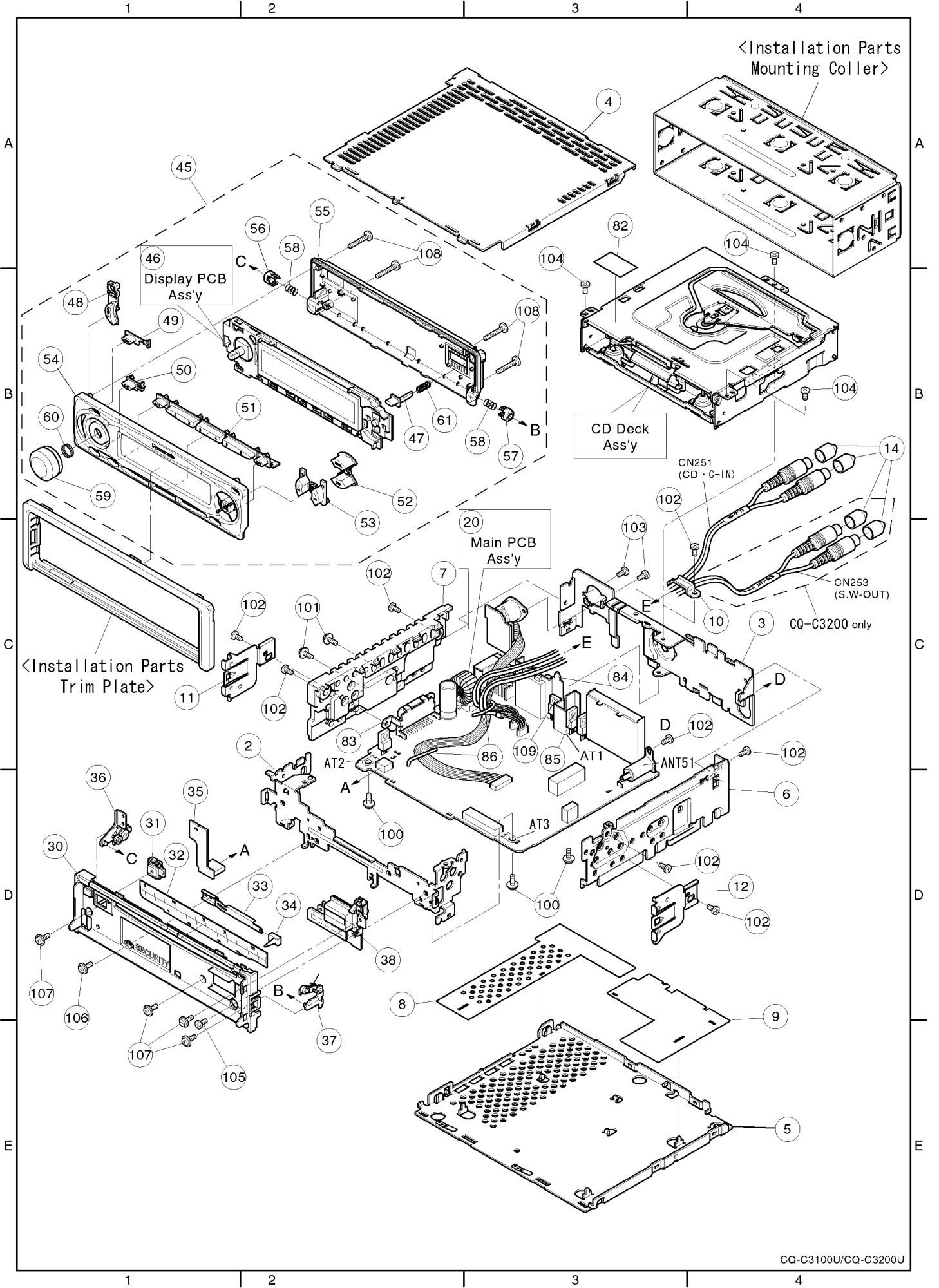

<Installation Parts Mounting Coller>
Display PCB Ass'y
CD Deck Ass'y
Main PCB Ass'y
<Installation Parts Trim Plate>
CN251 (CD・C-IN)
CN253 (S.W-OUT)
CQ-C3200 only
AT1
AT2
AT3
ANT51
CQ-C3100U/CQ-C3200U

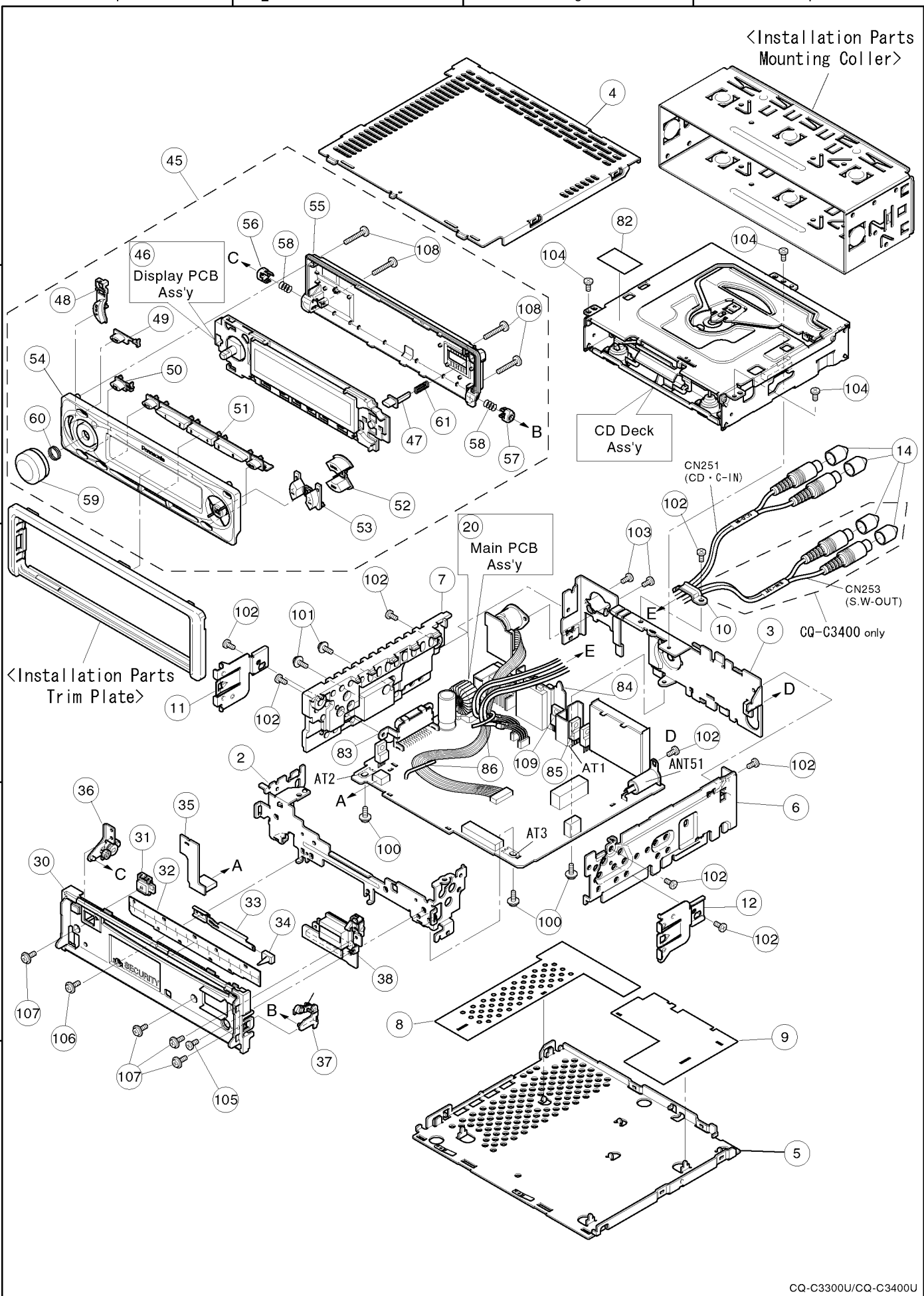

<Installation Parts Mounting Coller>
Display PCB Ass'y
CD Deck Ass'y
Main PCB Ass'y
<Installation Parts Trim Plate>
CN251 (CD・C-IN)
CN253 (S.W-OUT)
CQ-C3400 only
AT1
AT2
AT3
ANT51
CQ-C3300U/CQ-C3400U

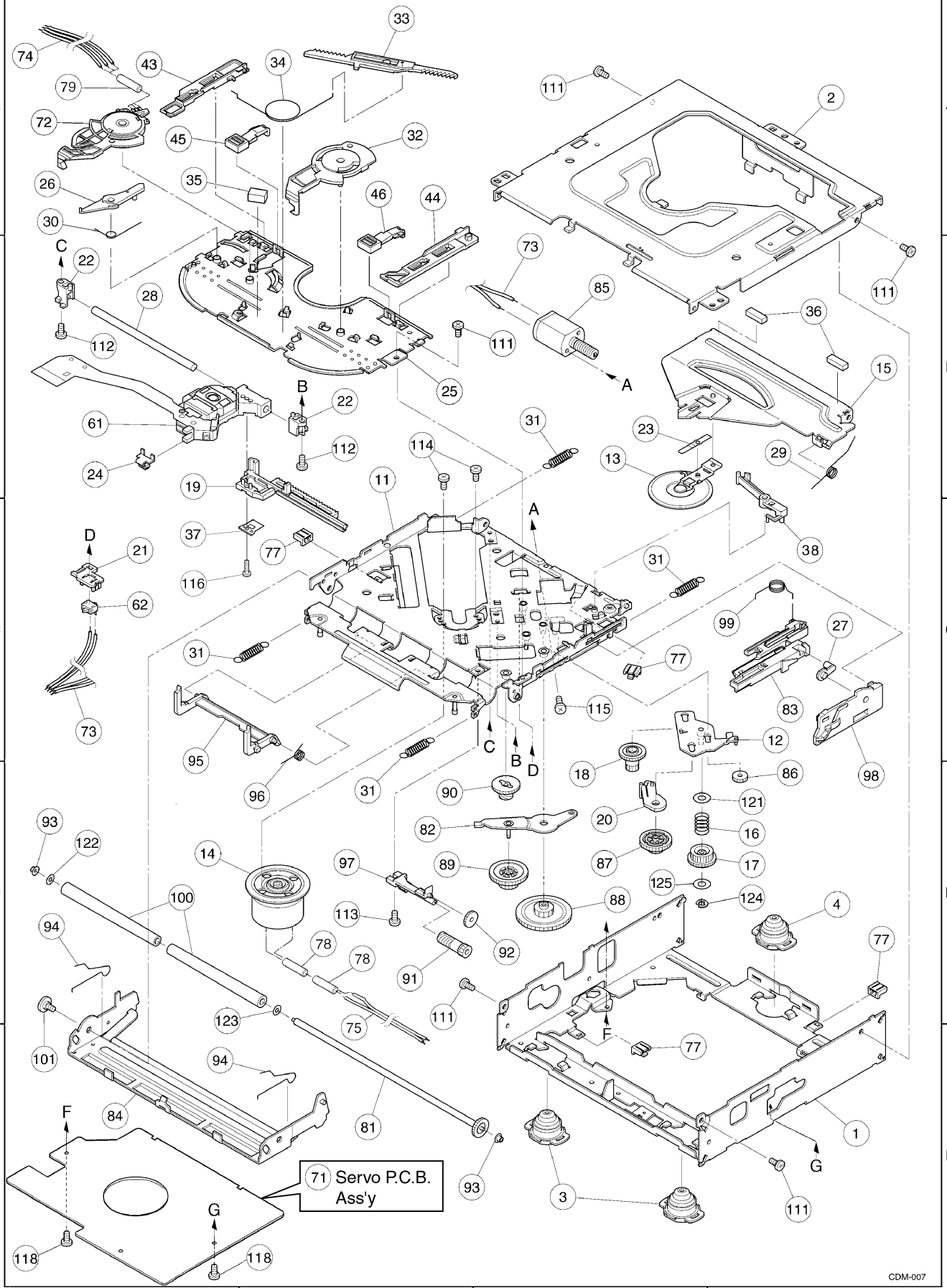
71 Servo P.C.B. Ass'y
CDM-007

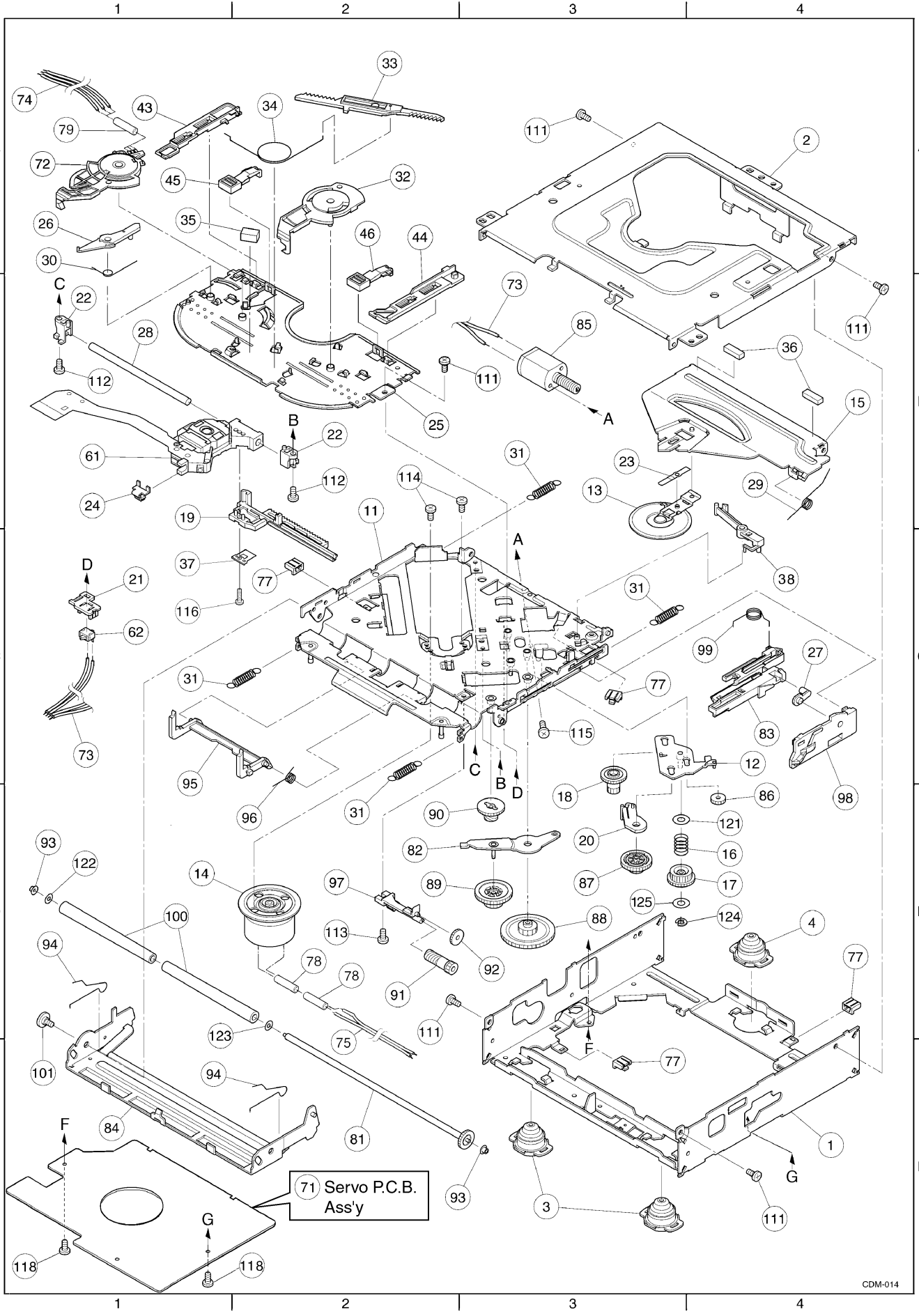
71 Servo P.C.B. Ass'y
CDM-014

● The differences among these models are mentioned below.

Features \ Models	CQ-C3400U	CQ-C3300U	CQ-C3200U	CQ-C3100U
MP3/WMA playback	Yes	Yes	None	None
CD text display	Yes	Yes	None	None
Subwoofer output	Yes	None	Yes	None
Subwoofer low pass filter setting	80 Hz/120 Hz	None	None	None

This can only be controlled through **the main unit.**

This can only be controlled through **the remote control unit.**

Operations with neither mark can be performed either by the main unit or the remote control unit.

Indicates features applicable to

CQ-C3400U CQ-C3400U only.

CQ-C3300U CQ-C3300U only.

CQ-C3200U CQ-C3200U only.

CQ-C3100U CQ-C3100U only.

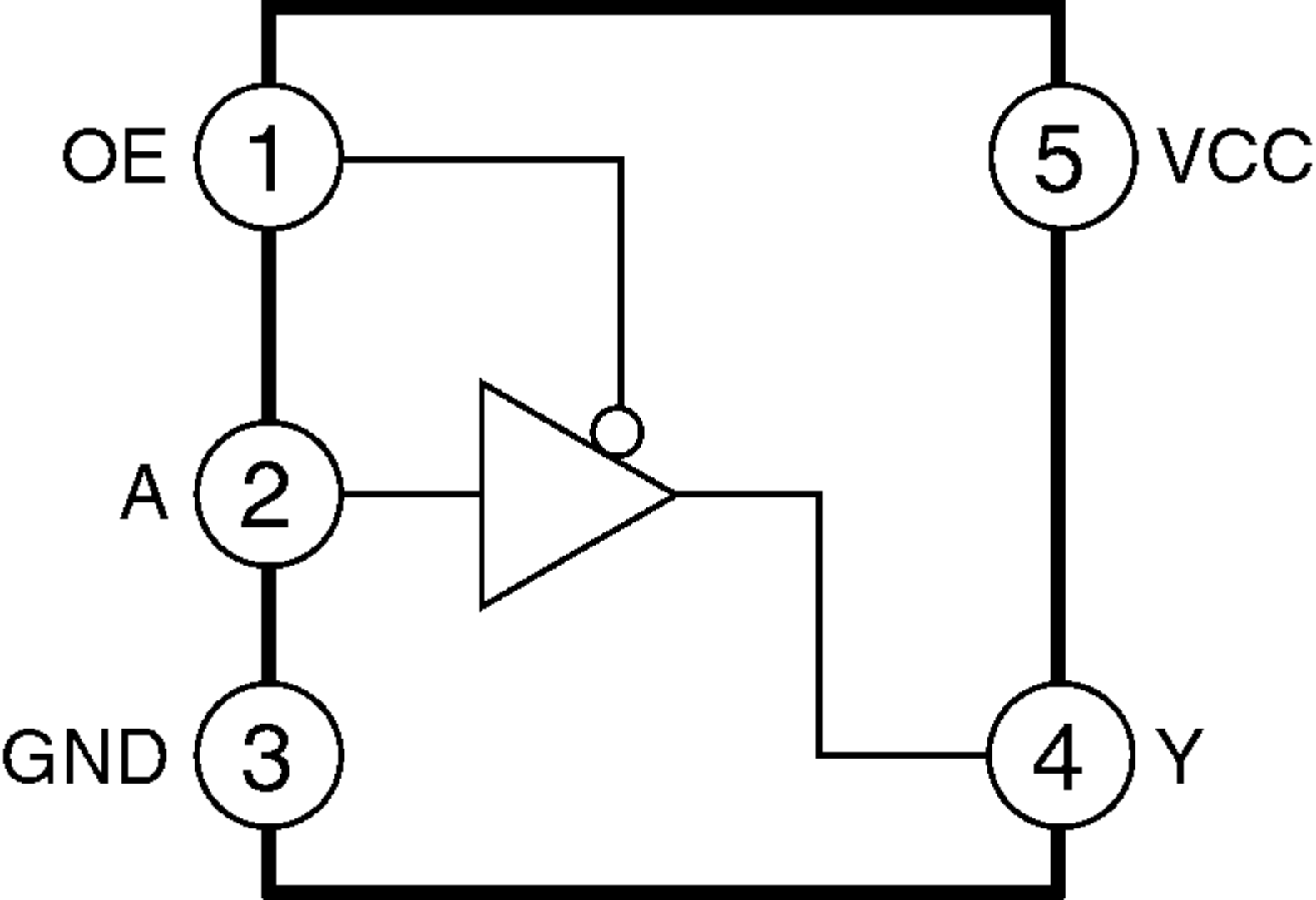
OE
1
5
VCC
A
2
GND
3
4
Y

CAUTION:

This product utilizes a laser diode with the unit turned "on", laser radiation is emitted from the pickup lens.

Laser radiation from the pickup lens is safety level, but be sure the followings:

1. Do not disassemble the optical pickup unit, since radiation from exposed laser diode is dangerous.
2. Do not adjust the variable resistor on the pickup unit. It was already adjusted.
3. Do not look at the focus lens using optical instruments.
4. Recommend not to look at pickup lens for a long time.

DANGER! Visible and invisible laser radiation when open. Avoid direct exposure to beam.

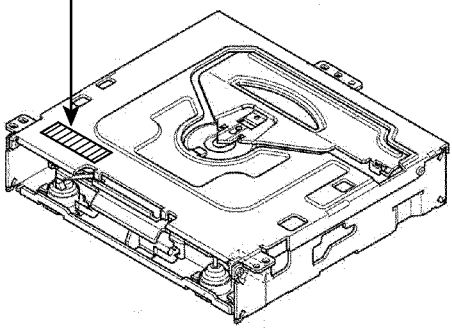

Deck Ass'y (Upper Side)

Caution

This Product utilizes a laser.

Use of controls or adjustments or performance of procedures other than those specified herein may result in hazardous radiation exposure.

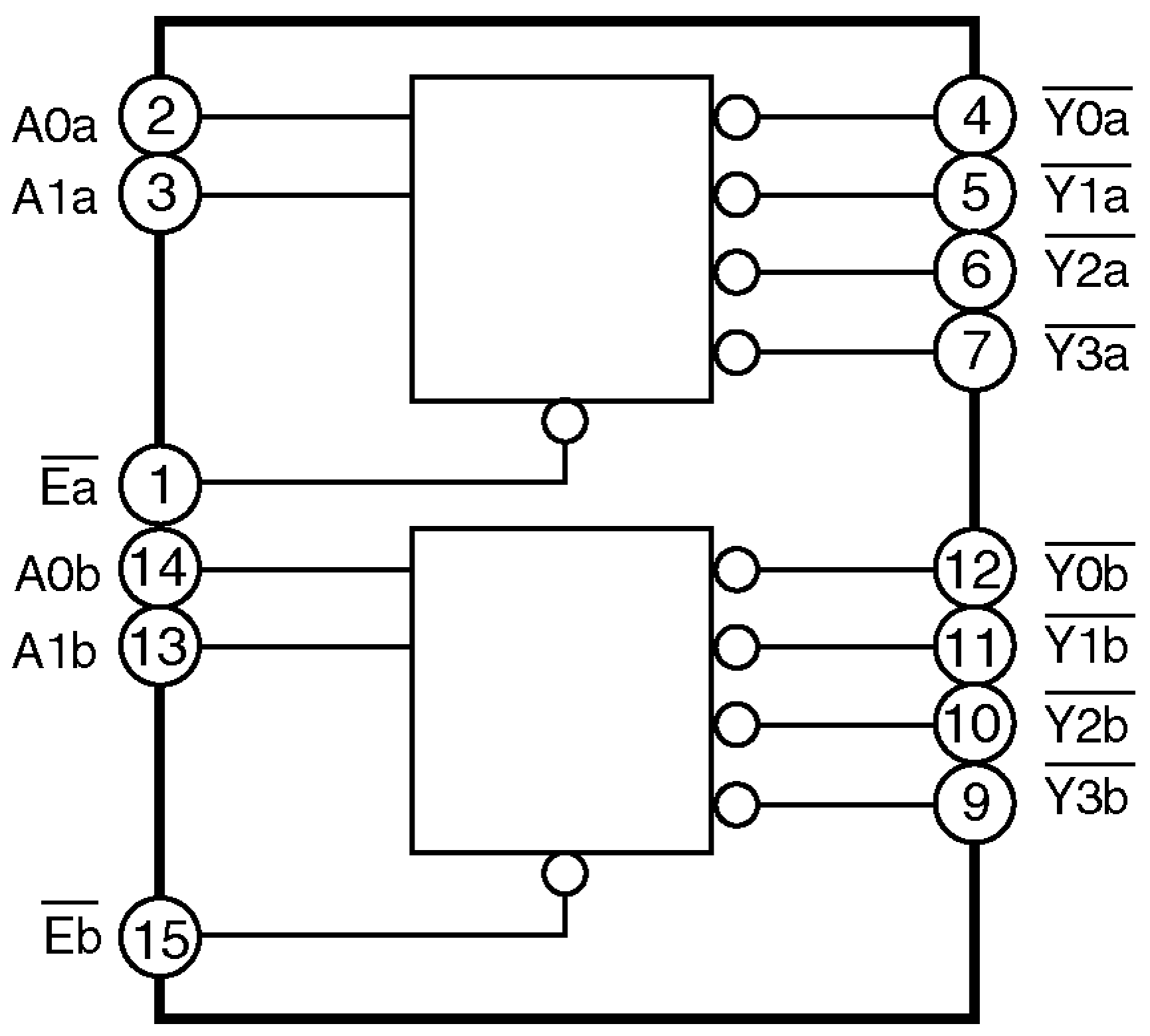
A0a
2
A1a
3
$\overline{Ea}$
1
A0b
14
A1b
13
$\overline{Eb}$
15
4
$\overline{Y0a}$
5
$\overline{Y1a}$
6
$\overline{Y2a}$
7
$\overline{Y3a}$
12
$\overline{Y0b}$
11
$\overline{Y1b}$
10
$\overline{Y2b}$
9
$\overline{Y3b}$

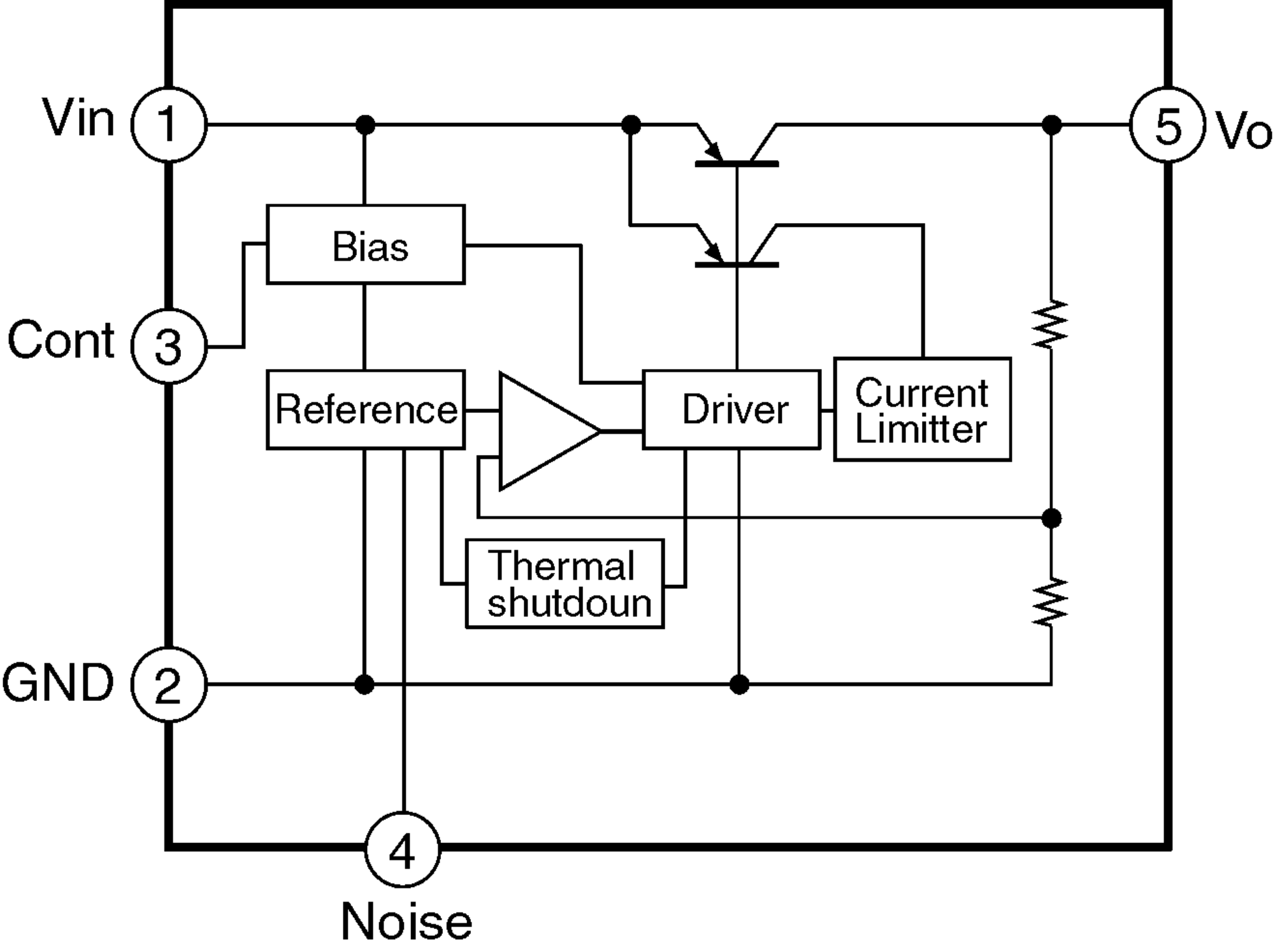
Vin
1
Cont
3
GND
2
4
Noise
5
Vo
Bias
Reference
Driver
Current
Limitter
Thermal
shutdoun

DIGITAL DEEMPHSIS
&TIMES OVER SAMPLING DIGITAL FILTER
1 BIT DAC PWMLOGIC
PWM (R)
PWM (L)
AVSS1
AVDD1
OUTR
OUTL
SRDATAIN(PSEL)
IOSEL
CLVS
CRC
BLKCK
GIO1(/CLDCK)
SBCK
SUBC
DEMPH
FLAG6(RESY)
SSEL
SQCK(GIO0)
SUBQ
AVSS2
AVDD2
PCK(DSLB)
EFM(CK384)
PLLF
PLLF2
DSLF
IREF
DRF
ARF
RSEL(GIO3)
PSEL
MLD
MCLK
MDATA
VCOF2
VCOF
BYTCK(TRVSTP)
SMCK
GIO2(FCLK)
PMCK(PLAY)
CSEL
MSEL
X2
X1
STAT
SUBCODE BUFFER
CD-TEXT BUFFER
DSL. PLL VCO
EFM DEMODULATION
EYNC INTERPOLATION
SUBCODE DEMODULATION
16K SRAM
CIRC ERROR CORRECTION
DEINTERLEAVE
DIGITAL AUDIO INTERFACE
CLV SERVO
INTER POLATION SOT MUTING DIGITAL ATTENUATION
FLAG
IPFLAG
TX
ECM
ECS
PC
LRCK
SRDATA
BCLK
DMUTE
TOFS
KICK
TRV
VREF
TVD
TRD
FOD
TBAL
FBAL
/TLOCK
/FLOCK
LDON
WVEL
SENSE
VCO
TIMING GENERATOR PITCH CONTROL
MICRO COMPUTER INTERFACE
SERVO CPU
D/A CONVERTER
OUTPUT PORT
A/D CONVERTER
INPUT PORT
SERVO TIMING GENERATOR
VDD
VSS
DVDD1
DVSS1
/RST
/TEST
FE
TE
RFENV
TRCRS
VDET
BDO
/RFDET
OFT

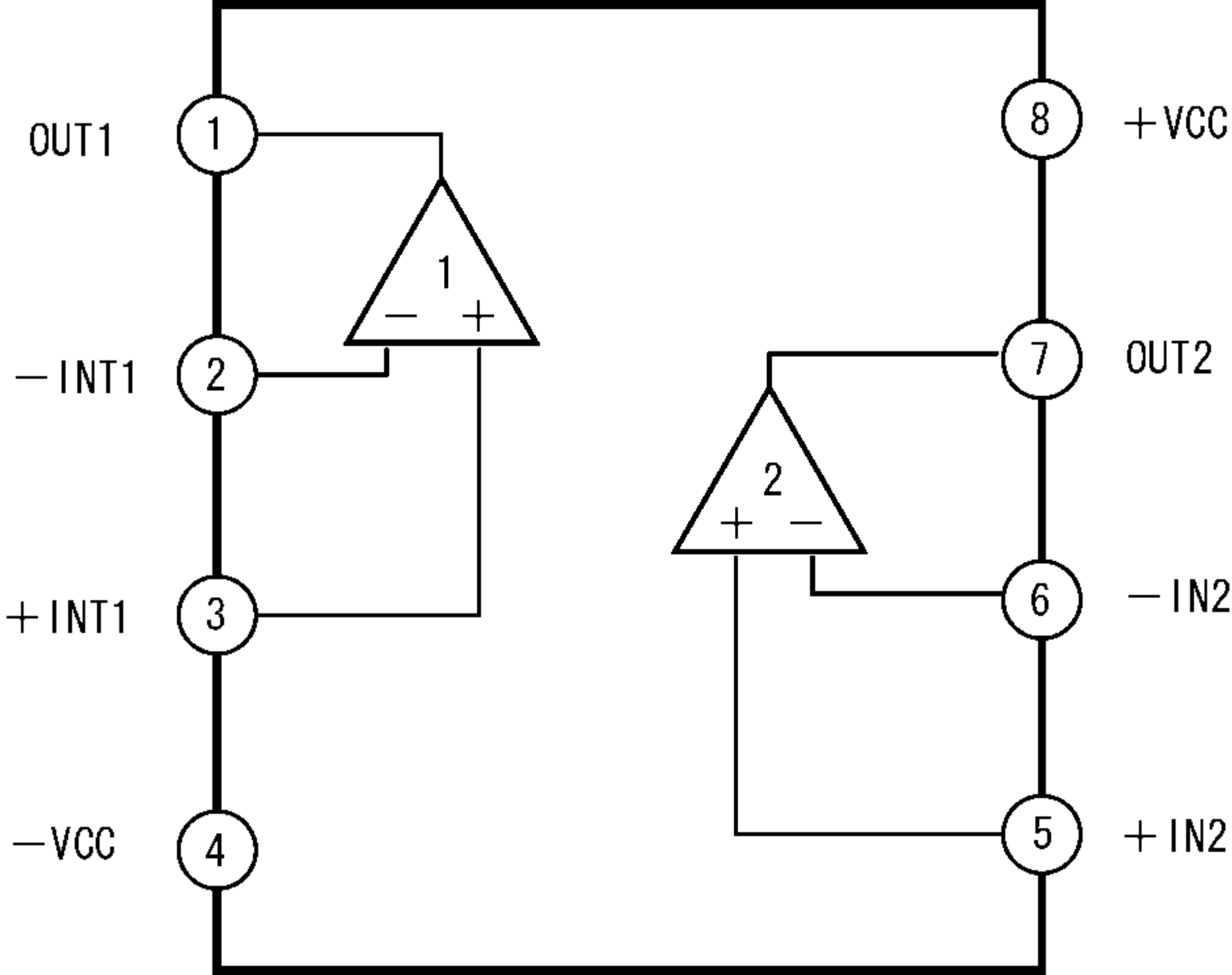
OUT1
1
−INT1
2
+INT1
3
−VCC
4
8
+VCC
7
OUT2
6
−IN2
5
+IN2
1
2

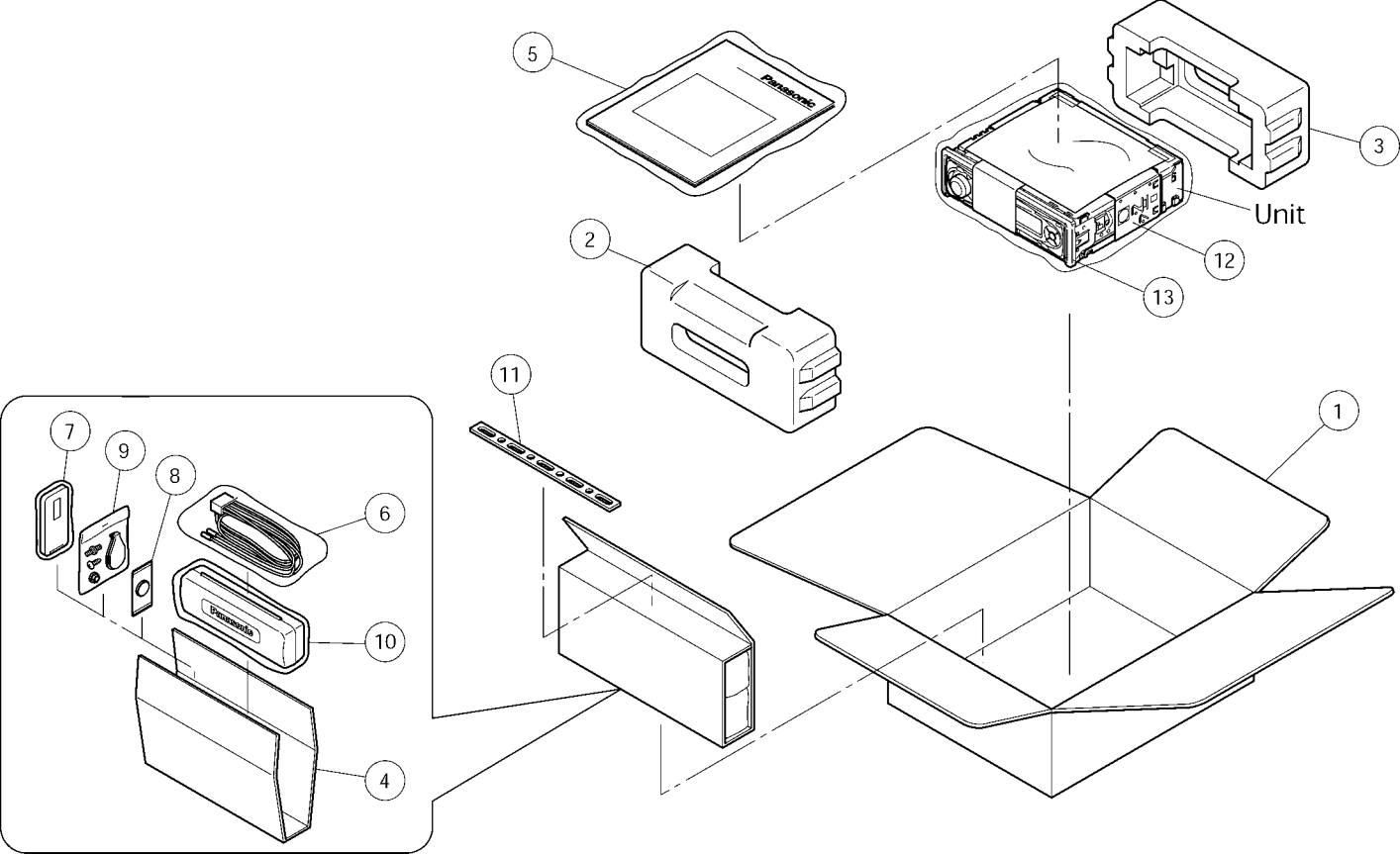
5
Panasonic
3
Unit
2
12
13
11
1
7
9
8
6
10
4

To
7204-02-11
CN681

3032-14-05

CN101
CDRST
CD MUTE
CD ON
CD CLK
CD SO
CD SI
DC8V
DC8V
GND(M)
GND(M)
CD3.3V
Lch
GND(A)
GND
Rch
8V
GND(M)
VDD3.3V
Lch
GND
Rch
RESET
MUTE
CDFS
SCK
SO
SI

L302 0
8V
L403 10u
3.3V
TP153 SYS3.3V
GND
VDD3.3V

System => MP3 DSP
CDFS
SCK
SO
SI
MUTE
RESET

TP106 RCH
TP107 GND(A)
TP108 LCH
C360 10uF/16V
C321 0.1u
R305 220
R315 220
IC204A M5218AFP
IC204B M5218AFP
R304 10K
R314 10K
C301 1000p
C302 1000p
C311 1000p
C312 1000p
R302 3.9k
R303 15K
R312 3.9k
R313 15K
C356 22uF/6.3V
C358 22uF/6.3V
R301 3.9k
R324 100k
R311 3.9k
R325 100k
C137 1u
C138 1u
R322 10k
R323 10k
R327 10k
R328 10k

SW2
SW1
RESTSW

R329 1k
C359 100uF/16V
Q203 YESAN060

JP101 SHORT
Analog GND
JP102 OPEN
C121 0.1u
C357 47uF/6.3V
Digital GND

LN9 SL(-)
LN8 SL(+)
C207 0.1u
LN7 RESTSW
LN6 GND(M)
LN5 SW1
LN4 SW2
LN3 GND(M)
LN2 SP(-)
LN1 SP(+)

C253 220uF/10V
C251 220uF/10V
C205 0.1u
IC203 YESAM166
SP(-) SP(+) SL(-) SL(+) Vcc
VO1(+) VO1(-) VO2(+) VO2(-) VO3(+) VO3(-)
VIN3 VIN2 VIN1 MUTE2 MUTE1 BIAS RVcc
VO5(-) VO5(+) VO4(-) VO4(+) PVcc12 PVcc45
VIN4 VIN5 RGND REI1 REI2 REO1 REO2

YESAM166
CH1 Spindle Motor
CH2 Feed Motor
CH3 Loading Motor (Not use)
CH4 Focus Coil
CH5 Tracking Coil

R202 0
R201 6.8k
TVD
TP149 TVD
TP150 ECS
R205 0
R204 1k
ECS
R206 18k
ECM
TP155 ECM
TP157 GND(M)
TP156 KICK
R129 6.8k
KICK
R208 0
R207 5.1k
TRD
TP151 TRD
C203 3300p
C204 3300p
R209
FOD
R210 0 5.1k
TP152 FOD
C141 0.1u
TP158 3.3V(D)
C252 47uF/6.3V
R211 27k
R212 47k
C208 22p
Q201 B1BDBC000001
3.3V
TP118 DSP3.3V
L304 0

Q101 B1BDBC000001
TP159 3.3V(A)
R101 4.7
L305 0
C151 10uF/16V
CN102
R114 0
R116 2.2k
R115 2.2k
PD
F
E
NA
NB
R117 0
LD
T-
T+
F-
F+
VCC
LD G
GND
A
GND
B
Vref
LPD
GND
16
Optical Pick-up Ass'y
TP103 GND
Vref

TP111 RFO
TP112 RFIN
IC202 YESAM163
PD LD VCC RFN RFOUT RFIN CAGC ARF CEA 3TOUT CBDO BDO COFTR OFTR NRFDET GND
A C B D F E TBAL FBAL GCTL FEOUT FEN TEN TEOUT TEBPF VDET Vref
NB NA F E
R104 470
R105 2.7k
R103 1.5k
C102 0.1u
C101 220p
C104 0.047u
ARF
C105 4700p
RFENV
C106 1000p
BDO
NRFDET
C107 0.047u
OFTR
R143 2M
C108 330p
C109 0.1u
C152 22uF/6.3V
C140 0.1u
C103 0.1u
C153 22uF/6.3V
C110 0.1u
TP102 Vref
C116 0.1u
C115 0.1u
TP113 GCTR
R107 2.7k
R106 10k
R118 15k
R113 120k
R112 240k
TP116 FBAL
TP115 TBAL
R111 18k
TP105 FE
TP104 TE
R110 10k
C114 1000p
C113 1500p
C112 2200p
R109 150k
R108 390k
C111 0.022u
C136 0.1u
R130 1M
R120 0

IC201 MN6627482WB
TRV TVD PC ECM ECS KICK TRD FOD Vref FBAL TBAL FE TE RFENV VDET OFT TRCRS /RFDET BDO LDON
PMCK/PLAY SMCK /RST STAT DMUTE SUBQ SQCK/XUGOD KICK /TLOCK /FLOCK SENSE MLD MDATA MCLK TX DVss1 DVdd1 SRDATA LRCK BCLK
SSEL MSEL PSEL CSEL RSEL/GIO3 OUTR AVss1 OUTL AVdd1 /TEST IOSEL RESY/FLAG6 DEMPH CRC CLVS FLAG IPFLAG GIO2/FCLK GIO1/CLDCK BYTCK/TRVSTP
PLLF2 TOFS WVEL ARF Iref DRF DSLF PLLF VCOF AVdd2 AVss2 EFMCK384 PCKOFS1B VCOF2 SUBC SBCK Vss X1 X2 Vdd
TP154 NRFDET
ARF
TP101 ARF
C122 1000p
R122 56k
R123 120k
C123 0.022u
R121 220k
C124 0.1u
C125 1000p
R125 470
R126 2.7k
C127 1000p
C126 1u
C128 0.22u
C129 0.1u
C130 1000p
R128 220
C131 0.1u
C132 0.1u
C139 0.1u
R127 220k
L303 0
R326 100
L301 100u
TP138 TP
C135 0.1u
C154 220uF/10V
R119 1k

R131 2.2k
R136 2.2k
R133 2.2k
/RST
STAT
SUBQ
SQCK
BLKCK
MLD
MDATA
MCLK
DATA_C_M
LRCK_C_M
CLK_C_M

MLD
MDATA
MCLK
/RST
BLKCK
STAT
SQCK
SUBQ
CLK2

MP3 DSP => CD DSP Audio Data
DATA_M_C
LRCK_M_C
CLK_M_C

CD DSP => MP3 DSP Audio Data
DATA_C_M
LRCK_C_M
CLK_C_M

CLK_M_C <=> SSEL
LRCK_M_C <=> MSEL
DATA_M_C <=> PSEL

CLK_C_M <=> BCLK
LRCK_C_M <=> LRCK
DATA_C_M <=> SRDATA

The following symbols are shown on the schematic diagram.

8V	8V
3.3V	3.3V
	AUDIO(L,R)

CDM-007(MP3)

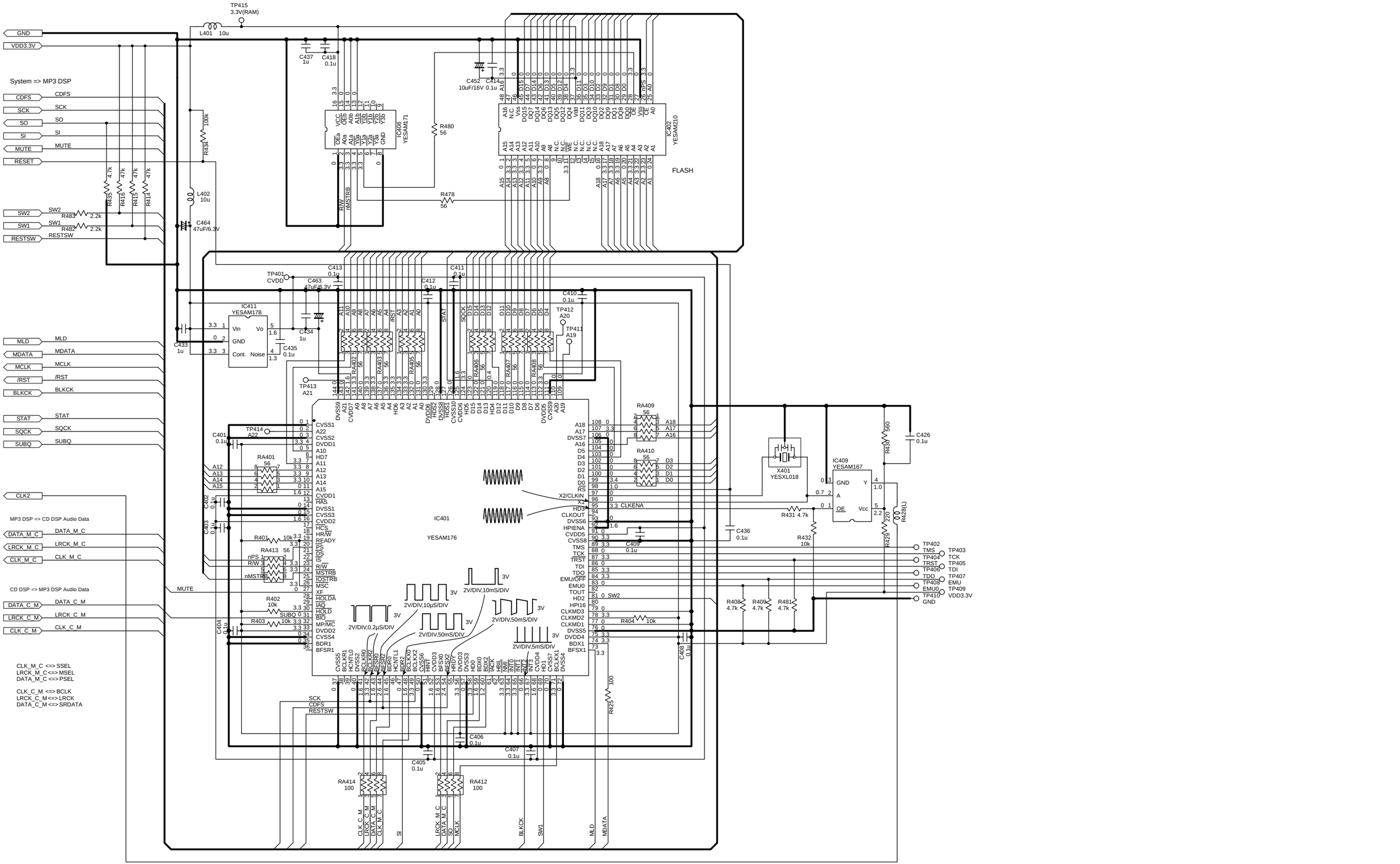
GND
VDD3.3V
System => MP3 DSP
CDFS
SCK
SO
SI
MUTE
RESET
SW2
SW1
RESTSW
MLD
MDATA
MCLK
/RST
BLKCK
STAT
SQCK
SUBQ
CLK2
MP3 DSP => CD DSP Audio Data
DATA_M_C
LRCK_M_C
CLK_M_C
CD DSP => MP3 DSP Audio Data
DATA_C_M
LRCK_C_M
CLK_C_M
CLK_M_C <=> SSEL
LRCK_M_C <=> MSEL
DATA_M_C <=> PSEL
CLK_C_M <=> BCLK
LRCK_C_M <=> LRCK
DATA_C_M <=> SRDATA
TP415
3.3V(RAM)
L401 10u
C437 1u
C418 0.1u
C452 10uF/16V
C414 0.1u
IC406
YESAM171
IC402
YESAM210
FLASH
R480 56
R478 56
R434 100k
R435 4.7k
R415 47k
R415 47k
R414 47k
L402 10u
C464 47uF/6.3V
R483 2.2k
R482 2.2k
TP401
CVDD
C463 47uF/6.3V
C413 0.1u
C412 0.1u
C411 0.1u
C410 0.1u
TP412
A20
TP411
A19
IC411
YESAM178
Vin
Vo
GND
Cont.
Noise
C433 1u
C434 1u
C435 0.1u
TP413
A21
TP414
A22
C401 0.1u
C402 0.1u
C403 0.1u
C404 0.1u
RA401 56
RA413 56
R401 10k
R402 10k
R403 10k
IC401
YESAM176
3V
2V/DIV,10µS/DIV
2V/DIV,0.2µS/DIV
2V/DIV,50mS/DIV
2V/DIV,10mS/DIV
2V/DIV,5mS/DIV
RA409 56
RA410 56
X401
YESXL018
IC409
YESAM167
R430 560
C426 0.1u
R431 4.7k
R432 10k
R428(L) 220
R429
C436 0.1u
C409 0.1u
R408 4.7k
R409 4.7k
R481 4.7k
R404 10k
C408 0.1u
R425 100
C406 0.1u
C407 0.1u
C405 0.1u
RA414 100
RA412 100
TP402 TMS
TP403 TCK
TP404 TRST
TP405 TDI
TP406 TDO
TP407 EMU
TP408 EMU0
TP409 VDD3.3V
TP410 GND

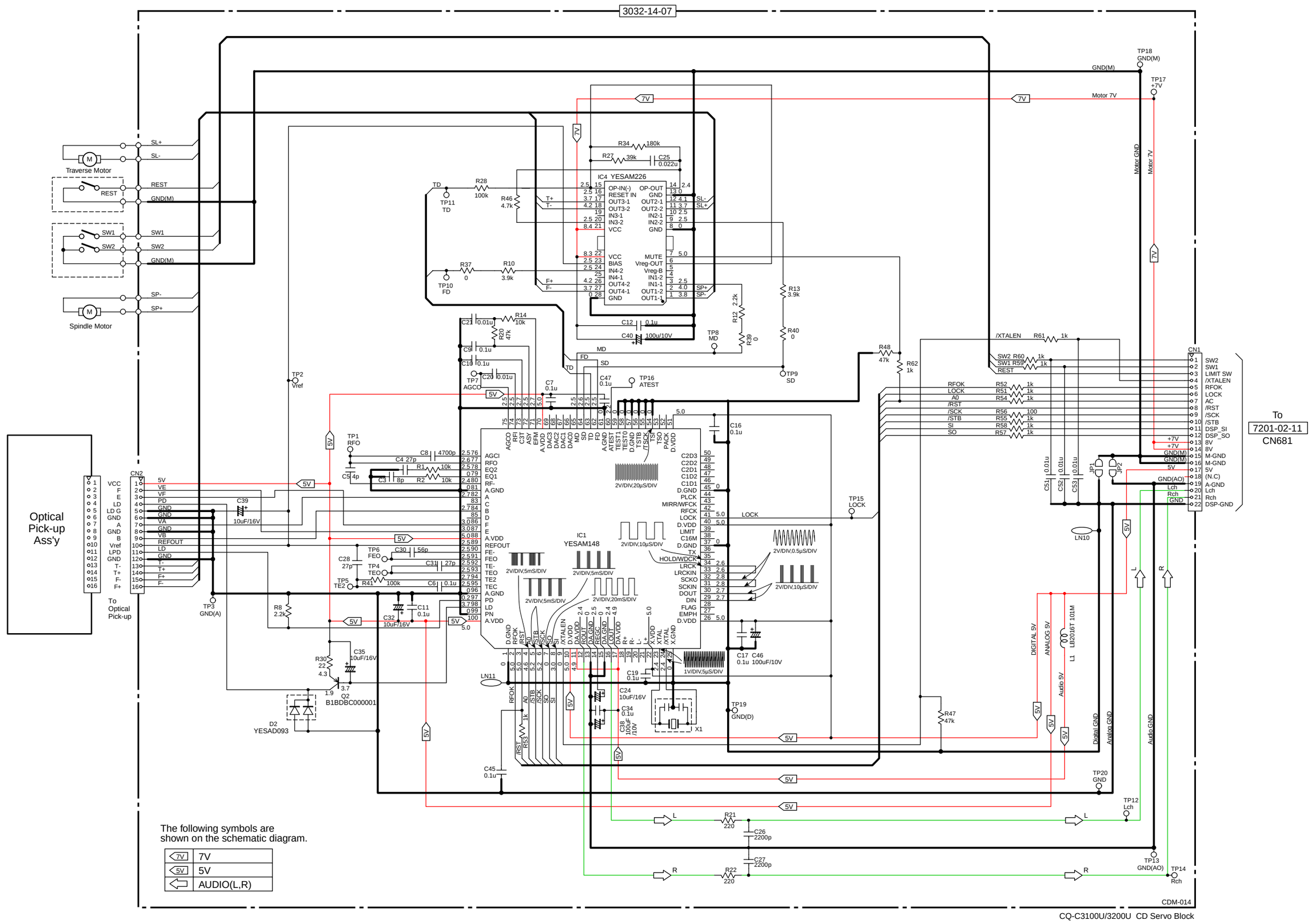
3032-14-07
Optical Pick-up Ass'y
To Optical Pick-up
Traverse Motor
Spindle Motor
IC4 YESAM226
IC1 YESAM148
To 7201-02-11 CN681
The following symbols are shown on the schematic diagram.
7V
5V
AUDIO(L,R)
CDM-014
CQ-C3100U/3200U CD Servo Block

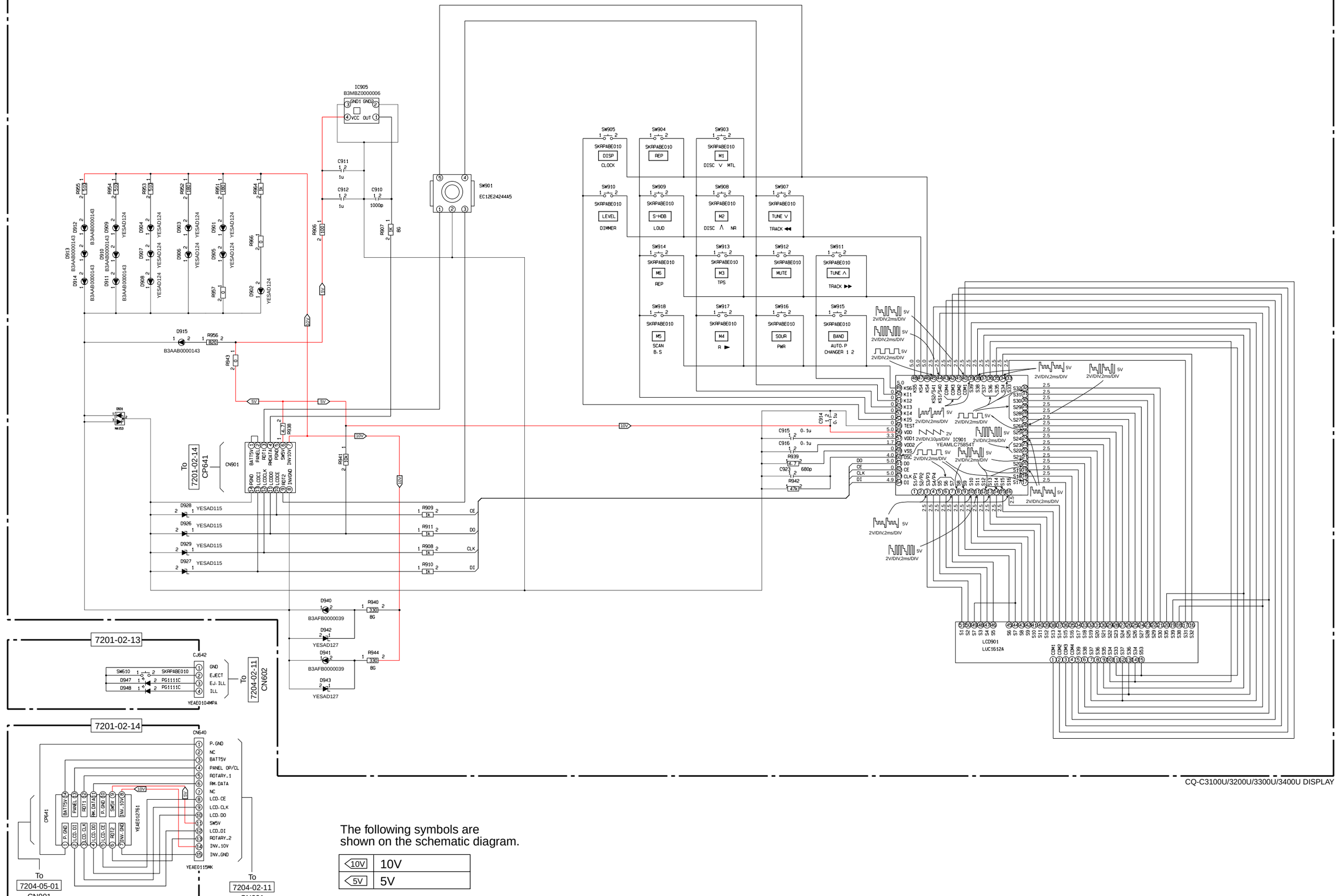

To 7201-02-14 CP641

To 7204-02-11 CN602

To 7204-05-01 CN901

To 7204-02-11 CN601

The following symbols are shown on the schematic diagram.

10V	10V
5V	5V

7204-02-11

7204-02-12

PA51

	FM	AM
1	0	0
2	0	0
3	0	0
4		
5		
6	1.3	1.7
7	7.9	7.9
8	7.8	0
9	2.3	2.3
10	0	0
11	0	0
12	3.6	3.7
13	3.6	3.6
14	0	0
15	0	0
16	0.4	0
17	4.9	4.9
18	0	0
19	0	0
20		
21		

	R629	R604
C3100U	82k	47k
C3200U	OPEN	47k

CQ-C3200U ONLY

IC601

	FM	AM	CD		FM	AM	CD
1	4.9	4.9	4.9	41	0	0	0
2	4.9	4.9	4.9	42	5.0	5.0	5.0
3	5.2	5.2	5.2	43	5.2	5.2	5.2
4	0	0	0	44	0	0	0
5	5.0	5.0	5.0	45	5.2	5.2	5.2
6	5.2	5.2	5.2	46	0	0	0
7	5.2	5.2	5.2	47	5.1	5.1	5.1
8	5.1	5.1	5.1	48	0	0	0
9	5.1	5.1	5.1	49			
10	5.1	5.1	5.1	50			
11	0	0	0	51	0	0	0
12	5.2	5.2	0	52	0	0	0
13	0	0	5.2	53	0	0	0
14	5.2	5.2	5.2	54	5.2	5.2	5.2
15	0	0	0	55	5.1	5.2	5.1
16	4.9	4.9	0	56	0	0	0
17	0	0	3.3	57	5.1	5.1	5.1
18	5.2	5.2	5.1	58			
19	0	0	0	59	0	0	0
20	0	0	5.2	60	5.2	5.2	5.2
21	5.1	5.1	5.1	61	5.0	5.0	5.0
22	5.1	5.1	0	62	5.1	5.1	5.1
23	5.2	5.2	5.2	63	0	0	0
24	0	0	5.2	64	0	0	0
25	0	0	4.6	65	5.1	5.1	5.1
26	0	0	4.9	66	5.1	5.1	5.1
27	0	0	4.9	67	0	0	0
28	0	0	5.2	68	5.2	5.2	5.2
29	0	0	0	69	3.1	3.1	3.1
30	5.2	5.2	0	70	2.5	2.5	2.5
31				71	0	0	0
32				72	2.9	2.9	2.9
33	0	0	0	73	2.6	2.6	2.6
34				74	5.2	5.2	5.2
35				75	5.2	5.2	5.2
36	5.2	5.2	5.2	76	0.2	0	0.5
37	5.2	5.2	5.2	77	4.8	4.8	4.8
38	0	0	0	78	0	0	0
39	5.2	5.2	5.2	79	0	0	0.5
40				80	0	0	0.5

The following symbols are shown on the schematic diagram.

	+B
10V	10V
8V	8V
5V	5V
	ACC
	RADIO(L,R)
	CD(L,R)
	AUDIO(L,R)

To 7204-02-12 (CP661)

To 3032-14-07 CN1

To 7201-02-13 CJ642

To 7201-02-14 CN640

To 7204-02-11 CN661

CQ-C3100U/3200U MAIN

PA51 C5BA00000109

PA51

	FM	AM
1	0	0
2	0	0
3	0	0
4		
5		
6	1.3	1.7
7	7.9	7.9
8	7.8	0
9	2.3	2.3
10	0	0
11	0	0
12	3.6	3.7
13	3.6	3.6
14	0	0
15	0	0
16	0.4	0
17	4.9	4.9
18	0	0
19	0	0
20		
21		

IC601

	FM	AM	CD		FM	AM	CD
1	4.9	4.9	4.9	61	0	0	0
2	4.9	4.9	4.9	62	5.0	5.0	5.0
3	5.2	5.2	5.2	63	5.2	5.2	5.2
4	0	0	0	44	0	0	0
5	5.0	5.0	5.0	45	5.2	5.2	5.2
6	5.2	5.2	5.2	46	0	0	0
7	5.2	5.2	5.2	47	5.1	5.1	5.1
8	5.1	5.1	5.1	48	0	0	0
9	5.1	5.1	5.1	49			
10	5.1	5.1	5.1	50			
11	0	0	0	51	0	0	0
12	5.2	5.2	0	52	0	0	0
13	0	0	0	53	0	0	0
14	5.2	5.2	5.2	54	5.2	5.2	5.2
15	0	0	0	55	5.1	5.2	5.1
16	4.9	4.9	0	56	0	0	0
17	0	3.3	5.1	57	5.1	5.1	5.1
18	5.2	5.2	5.1	58			
19	0	0	0	59	0	0	0
20	0	0	5.2	60	5.2	5.2	5.2
21	5.1	5.1	5.1	61	5.0	5.0	5.0
22	5.1	5.1	0	62	5.1	5.1	5.1
23	5.2	5.2	5.2	63	0	0	0
24	0	0	5.2	64	0	0	0
25	0	0	4.6	65	5.1	5.1	5.1
26	0	0	4.9	66	5.1	5.1	5.1
27	0	0	4.9	67	0	0	0
28	0	0	5.2	68	5.2	5.2	5.2
29	0	0	0	69	3.1	3.1	3.1
30	5.2	5.2	0	70	2.5	2.5	2.5
31				71	0	0	0
32				72	2.9	2.9	2.9
33	0	0	0	73	2.6	2.6	2.6
34				74	5.2	5.2	5.2
35				75	5.2	5.2	5.2
36	5.2	5.2	5.2	76	0.2	0	0.5
37	5.2	5.2	5.2	77	4.8	4.8	4.8
38	0	0	0	78	0	0	0
39	5.2	5.2	5.2	79	0	0	0
40				80	0	0	0.5

	R629	R604
C3300U	82k	47k
C3400U	OPEN	47k

CD. CINLch

CD. CINRch

CQ-C3400U ONLY

To 7204-02-12 (CP661)

To 3032-14-05 CN101

To 7201-02-13 CJ642

To 7201-02-14 CN640

The following symbols are shown on the schematic diagram.

+B	
10V	10V
8V	8V
5V	5V
3.3V	3.3V
ACC	ACC
RADIO(L,R)	RADIO(L,R)
CD(L,R)	CD(L,R)
AUDIO(L,R)	AUDIO(L,R)

7204-02-12

To 7204-02-11 CN661

CQ-C3400U ONLY

CQ-C3300U/C3400U MAIN

21.4. CD Servo Block [CQ-C3300U/CQ-C3400U] -1

3032-14-05

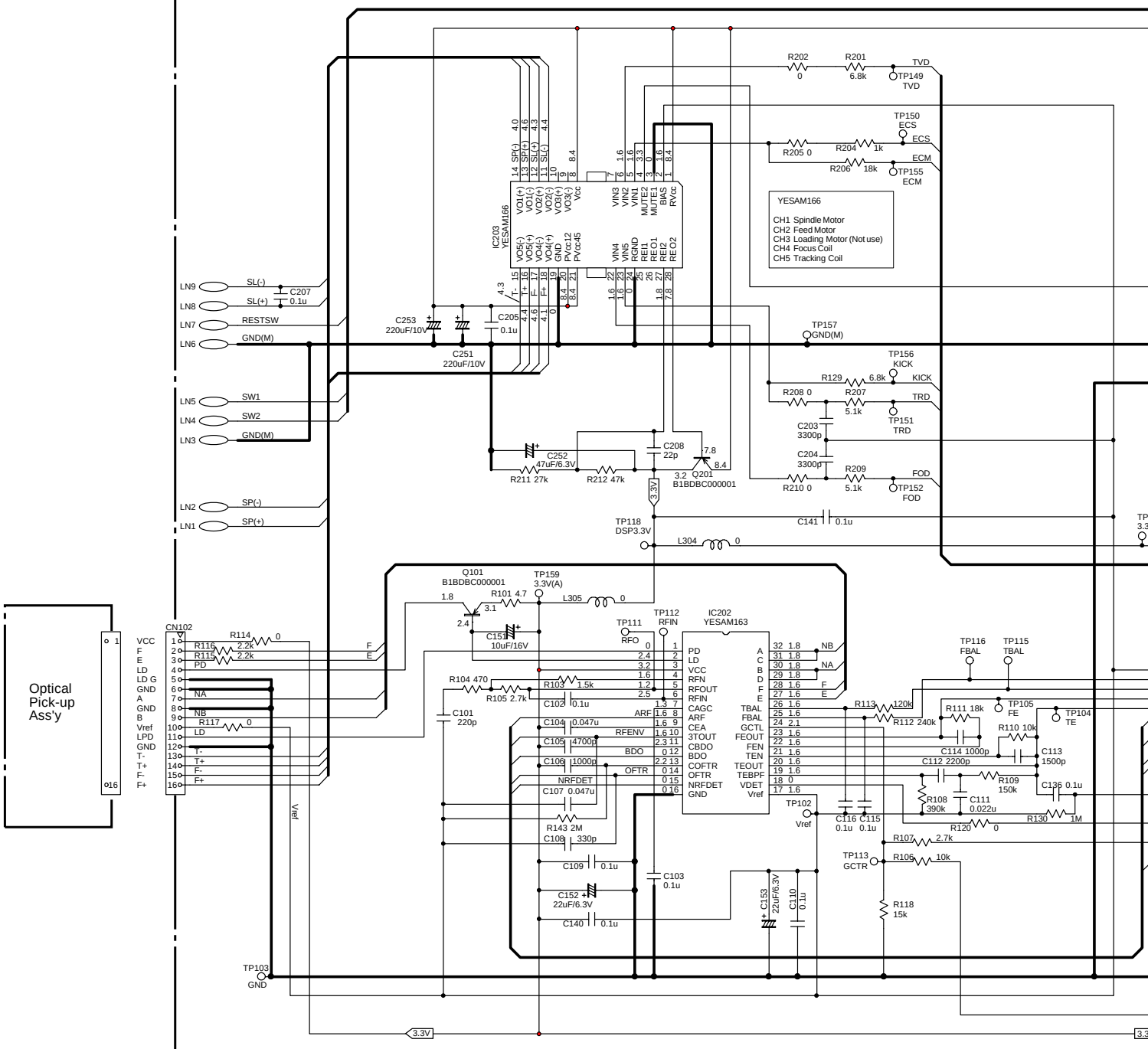

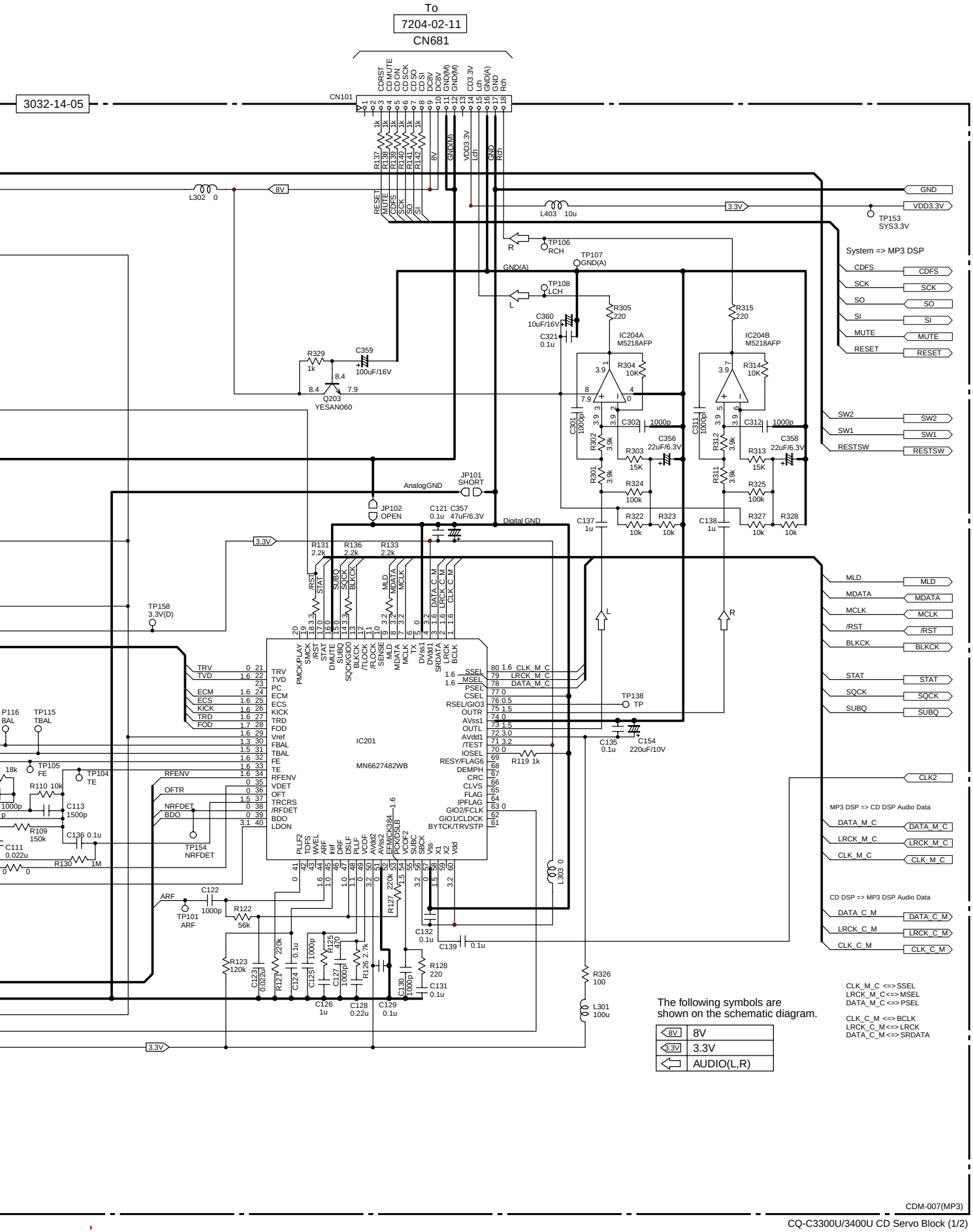

CQ-C3300U/3400U CD Servo Block (1/2)

21.5. CD Servo Block [CQ-C3300U/CQ-C3400U] -2

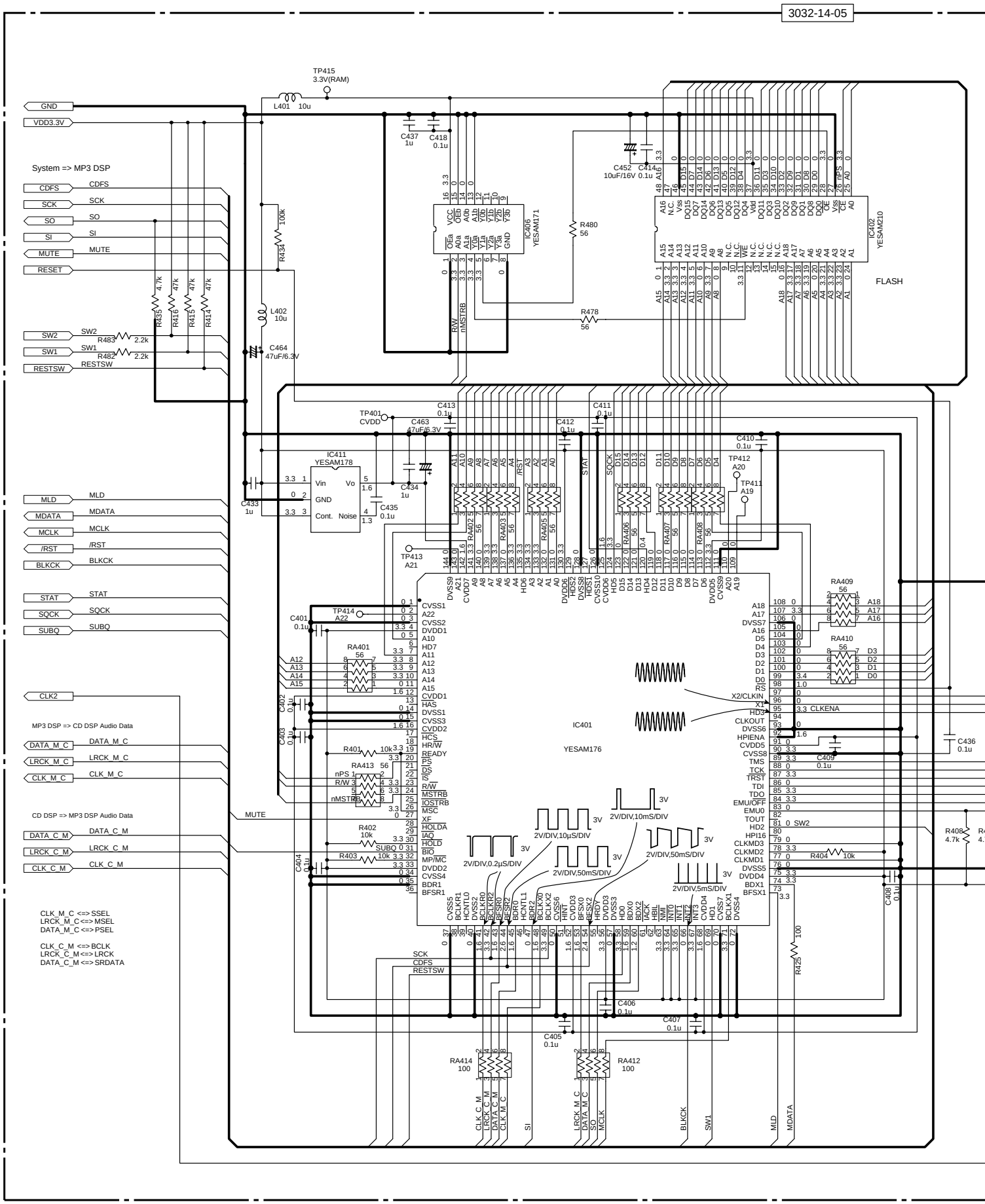

-05

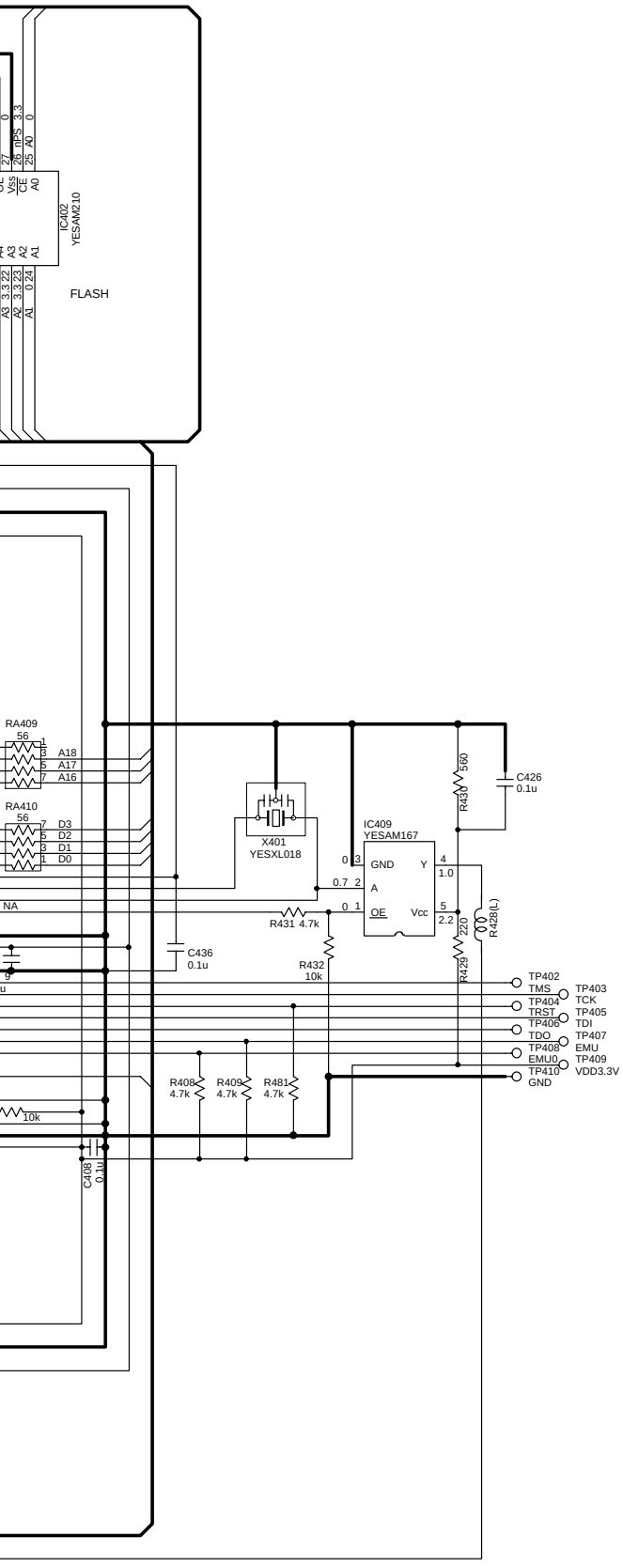

CDM-007(MP3)

CQ-C3300U/3400U CD Servo Block (2/2)

21.6. CD Servo Block [CQ-C3100U/CQ-C3200U]

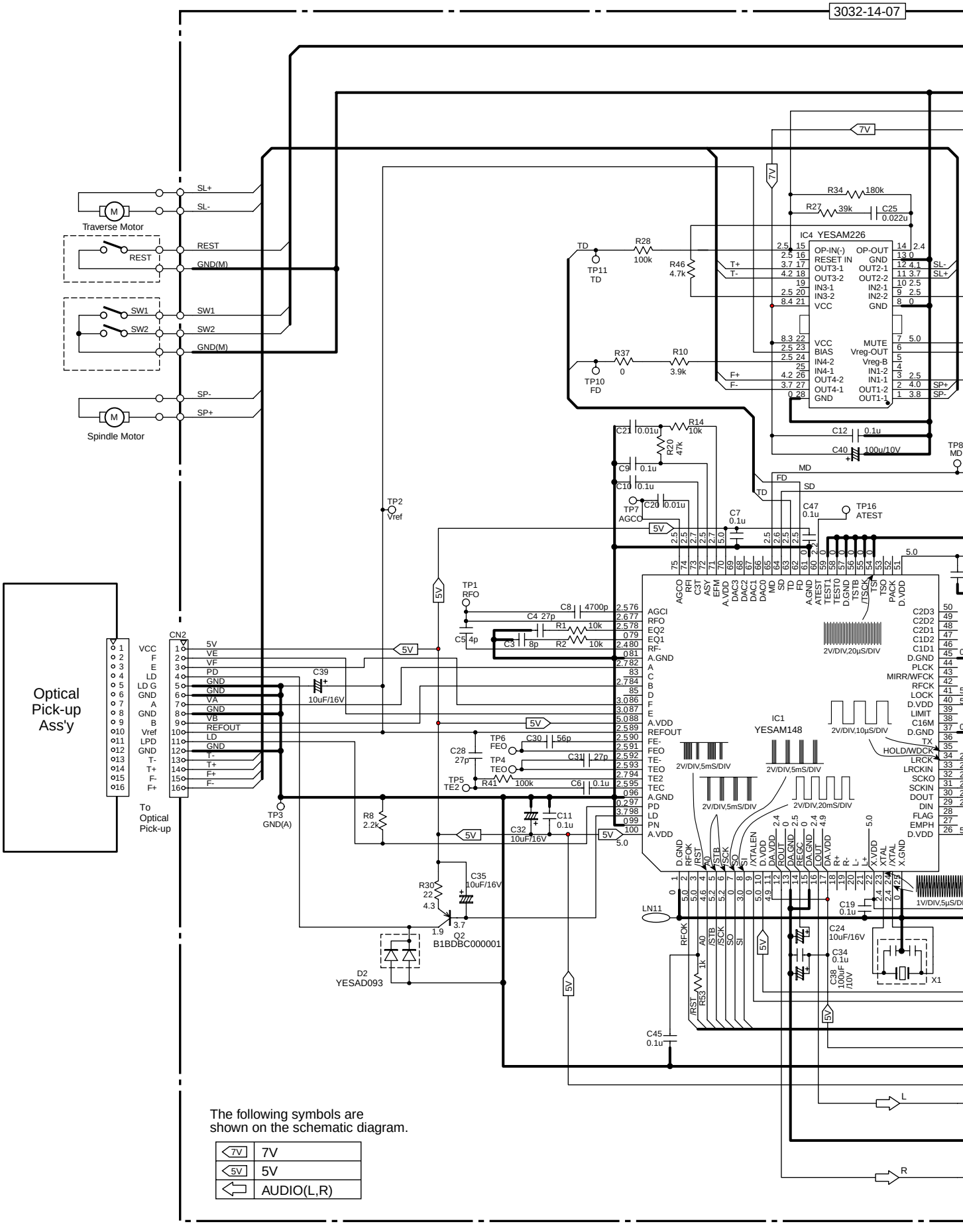

The following symbols are shown on the schematic diagram.

7V	7V
5V	5V
	AUDIO(L,R)

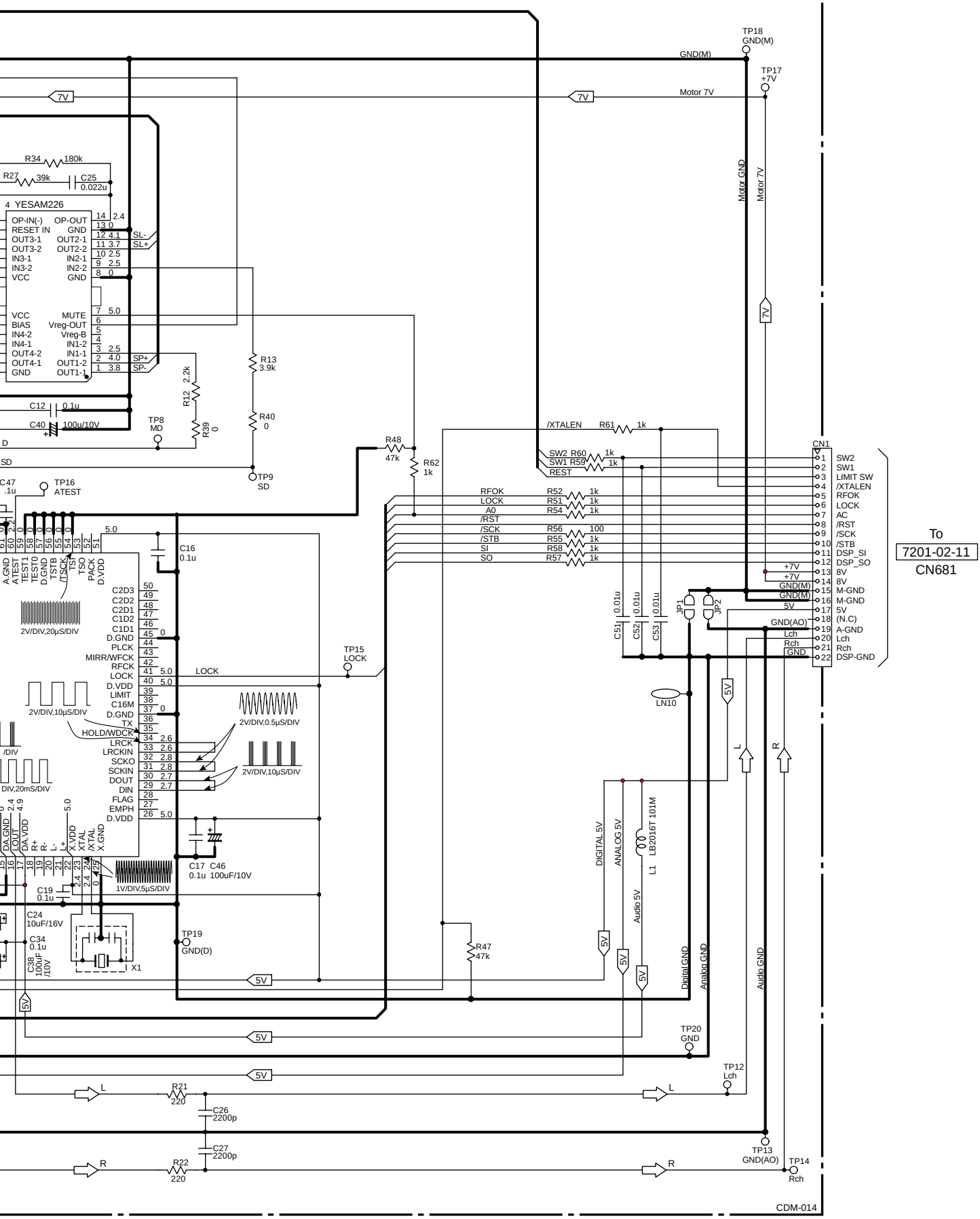

CDM-014

CQ-C3100U/3200U CD Servo Block

21.3. Display Block

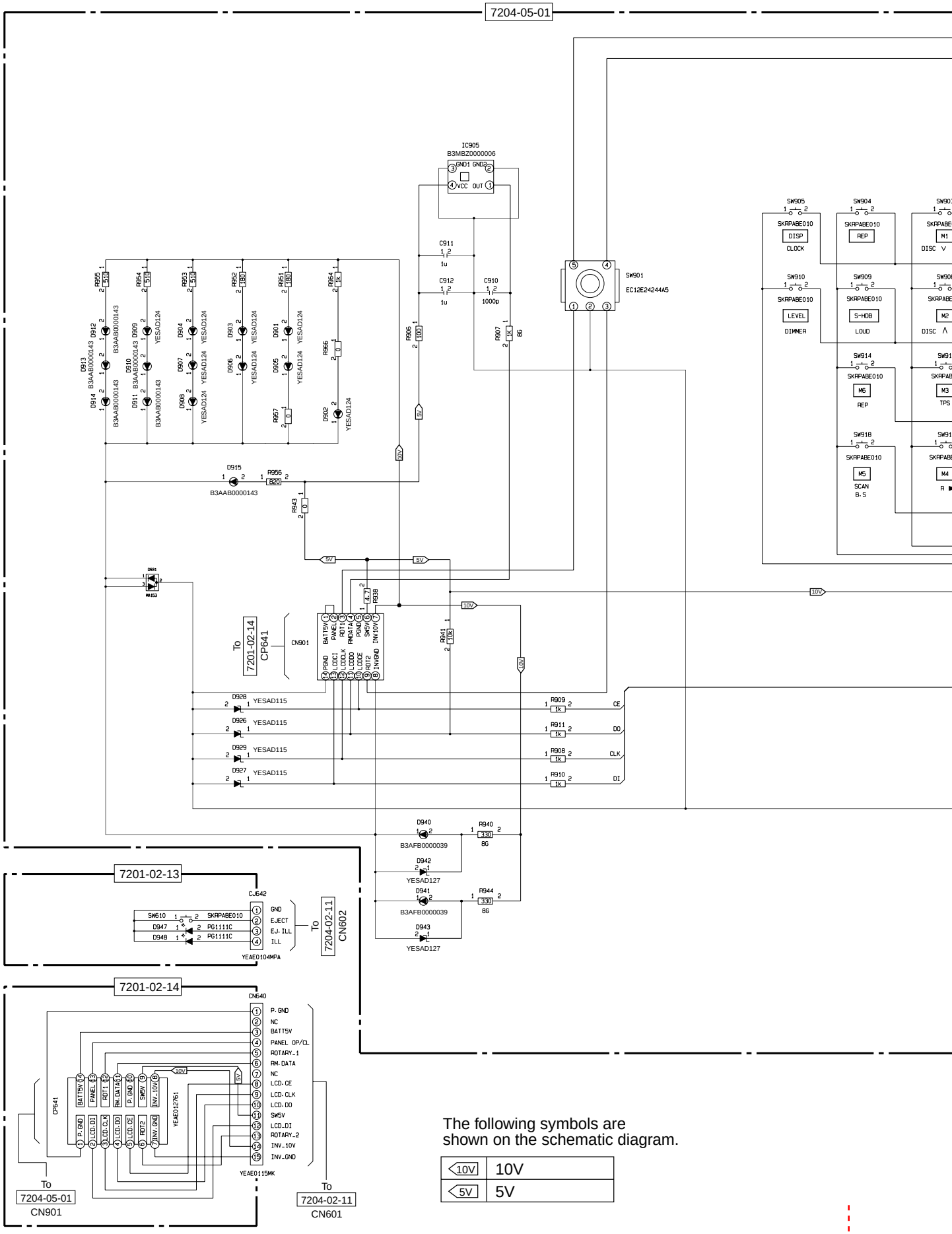

The following symbols are shown on the schematic diagram.

10V	10V
5V	5V

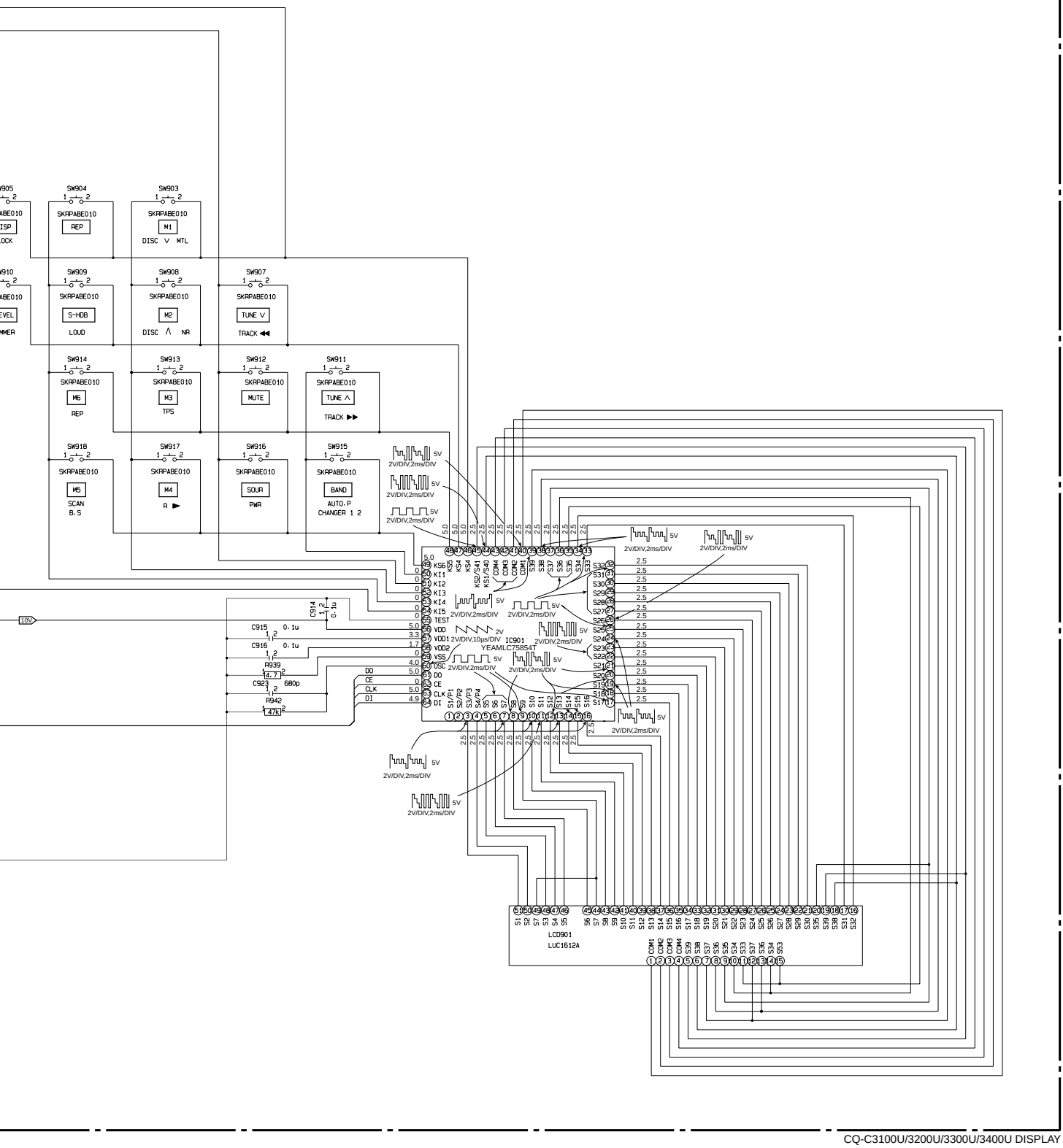

CQ-C3100U/3200U/3300U/3400U DISPLAY

21 SCHEMATIC DIAGRAM

21.1. Main Block [CQ-C3300U/3400U]

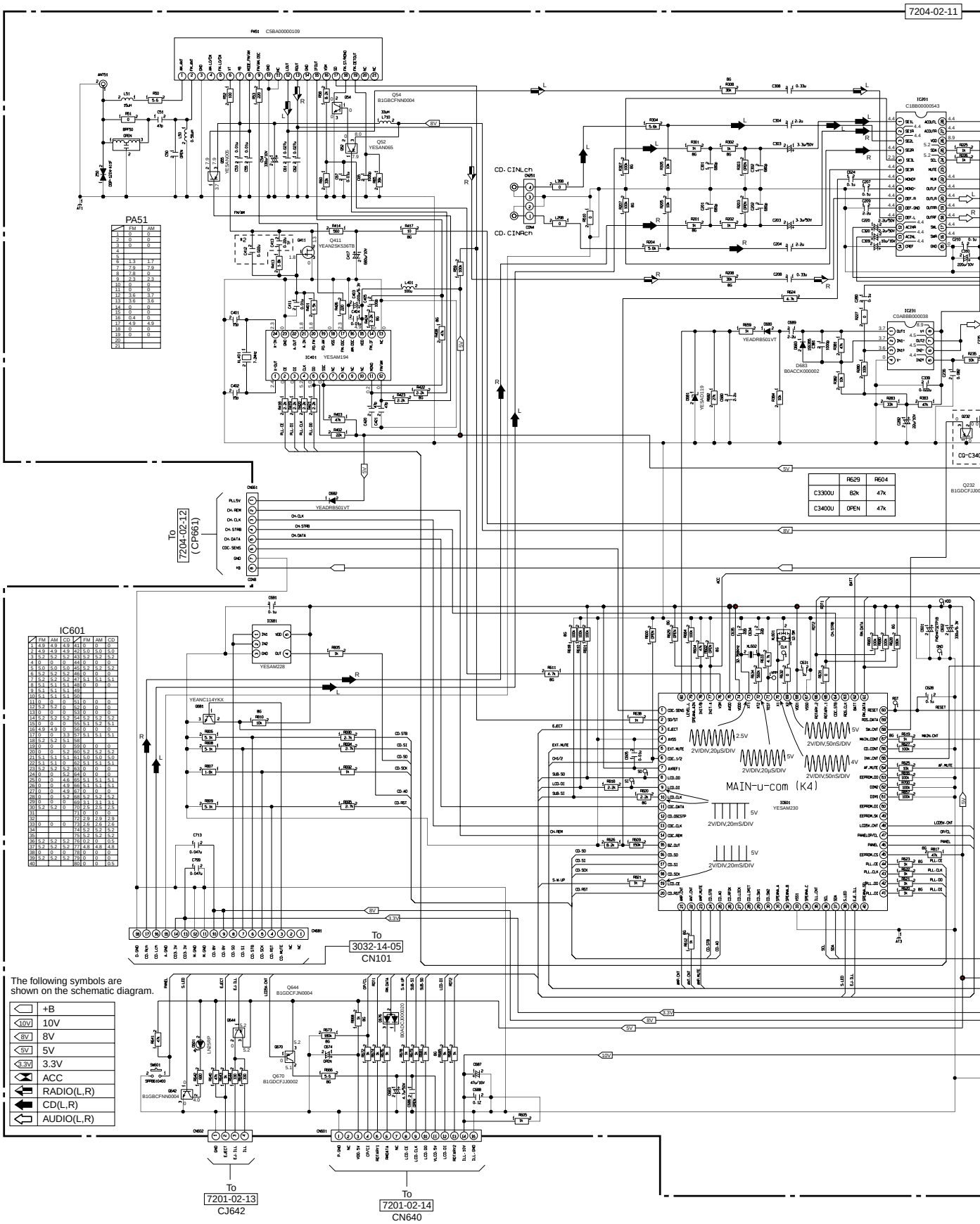

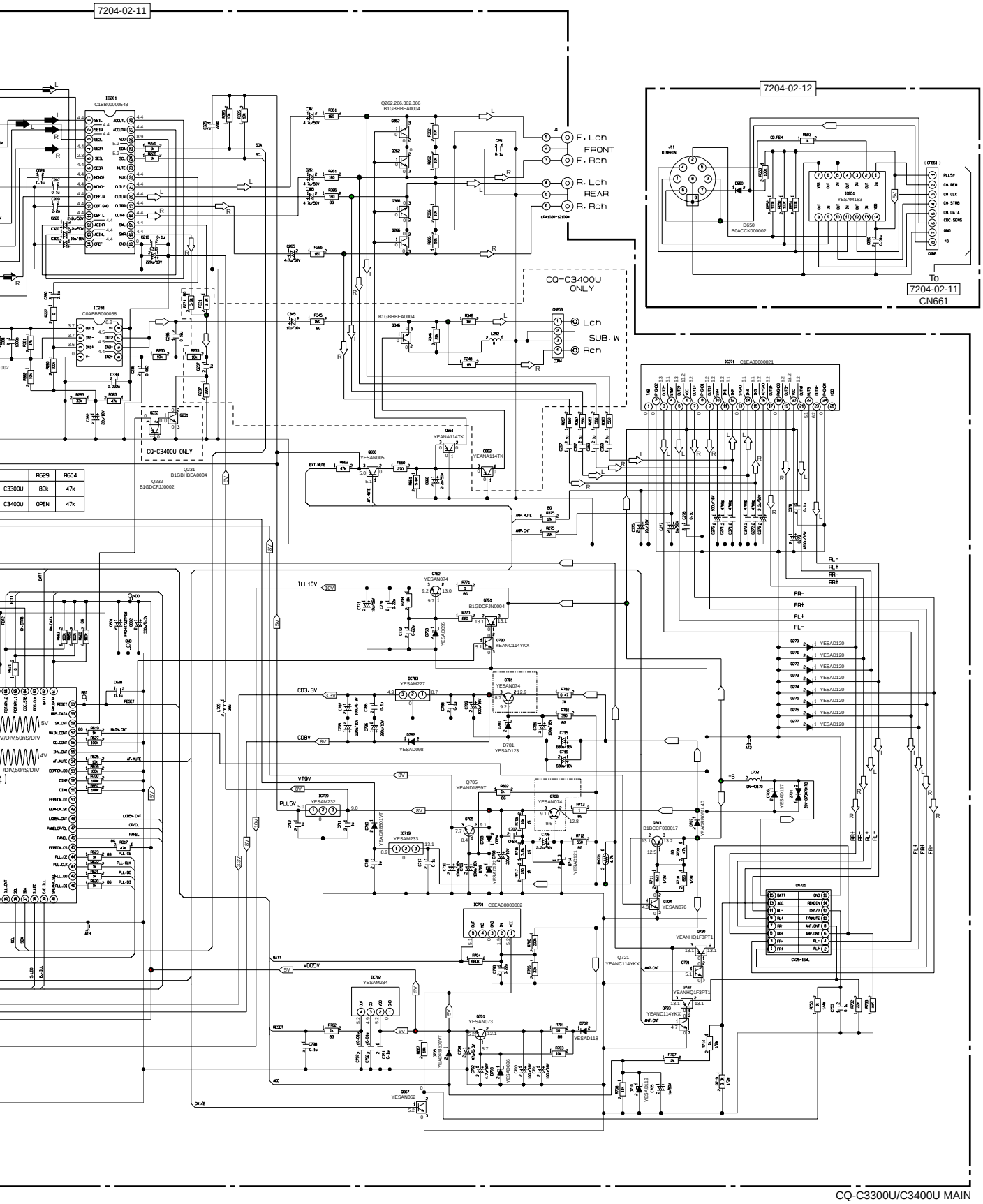

CQ-C3300U/C3400U MAIN

21.2. Main Block [CQ-C3100U/3200U]

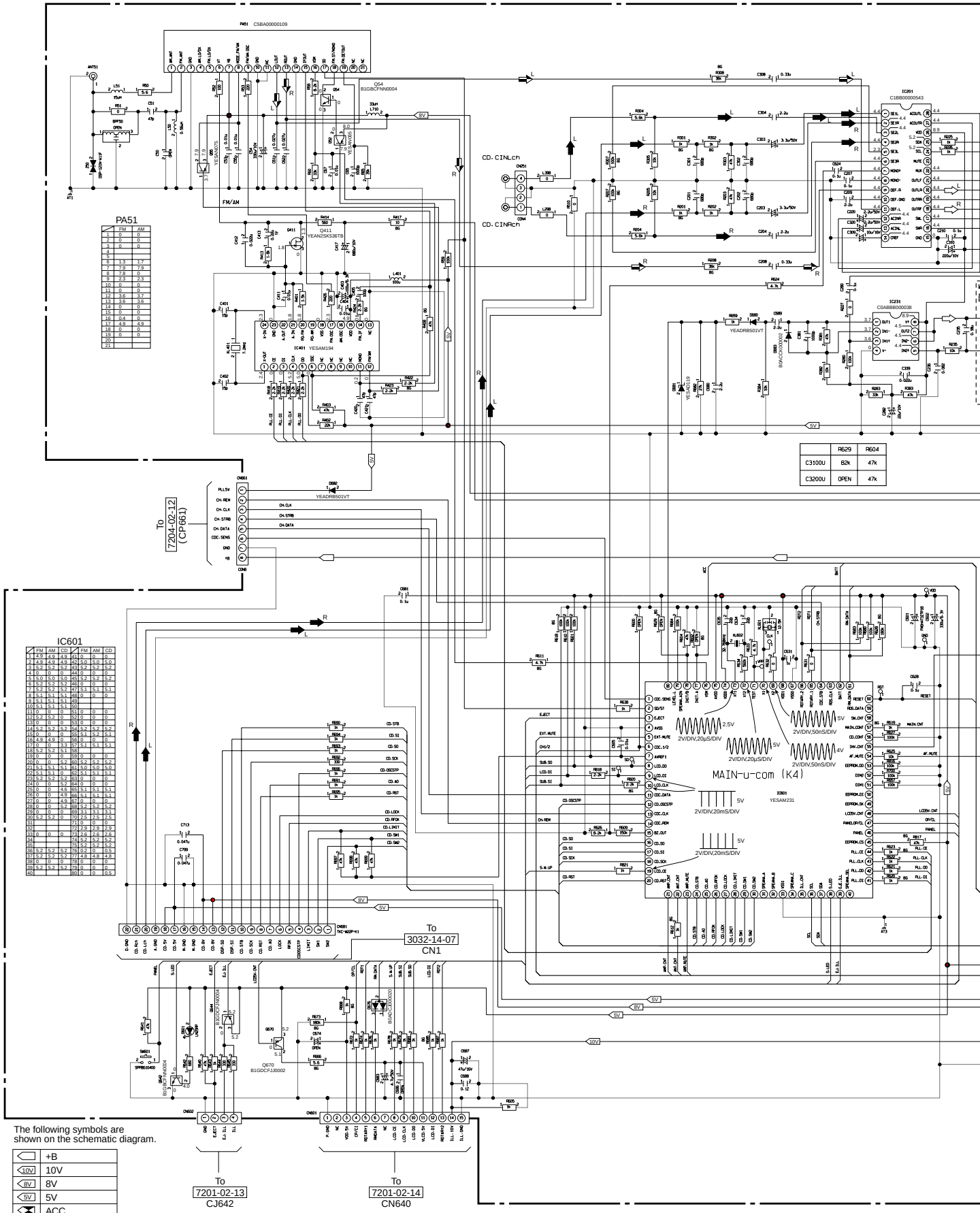

	FM	AM
1	0	0
2	0	0
3	0	0
4		
5		
6	1.3	1.7
7	7.9	7.9
8	7.8	0
9	2.3	2.3
10	0	0
11	0	0
12	3.6	3.7
13	3.6	3.6
14	0	0
15	0	0
16	0.4	0
17	4.9	4.9
18	0	0
19	0	0
20		
21		

	R629	R604
C3100U	82k	47k
C3200U	OPEN	47k

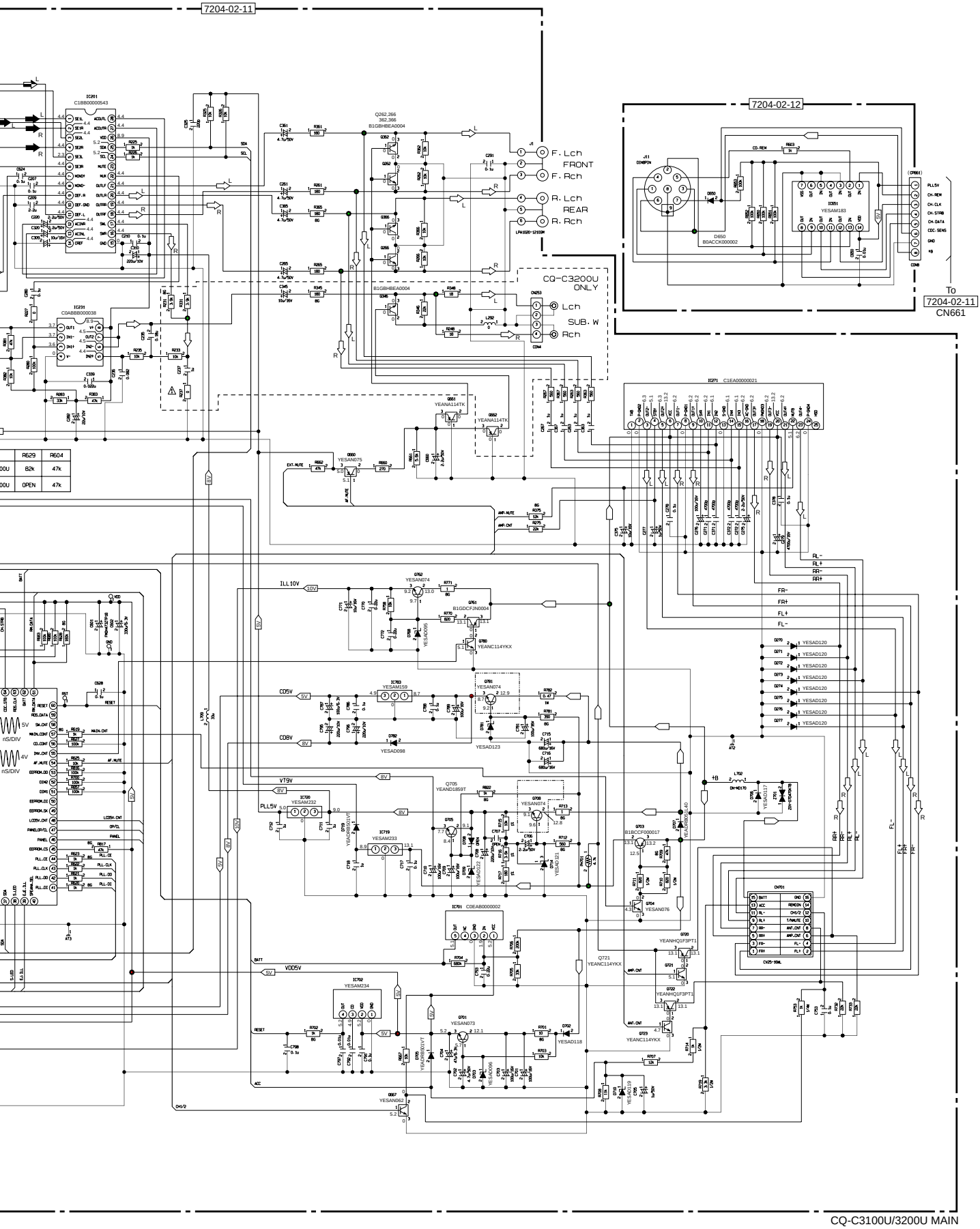
7204-02-11
7204-02-12
To
7204-02-11
CN661
CQ-C3200U
ONLY
F. Lch
FRONT
F. Rch
R. Lch
REAR
R. Rch
Lch
SUB. W
Rch
R629
R604
82k
47k
OPEN
47k
CQ-C3100U/3200U MAIN

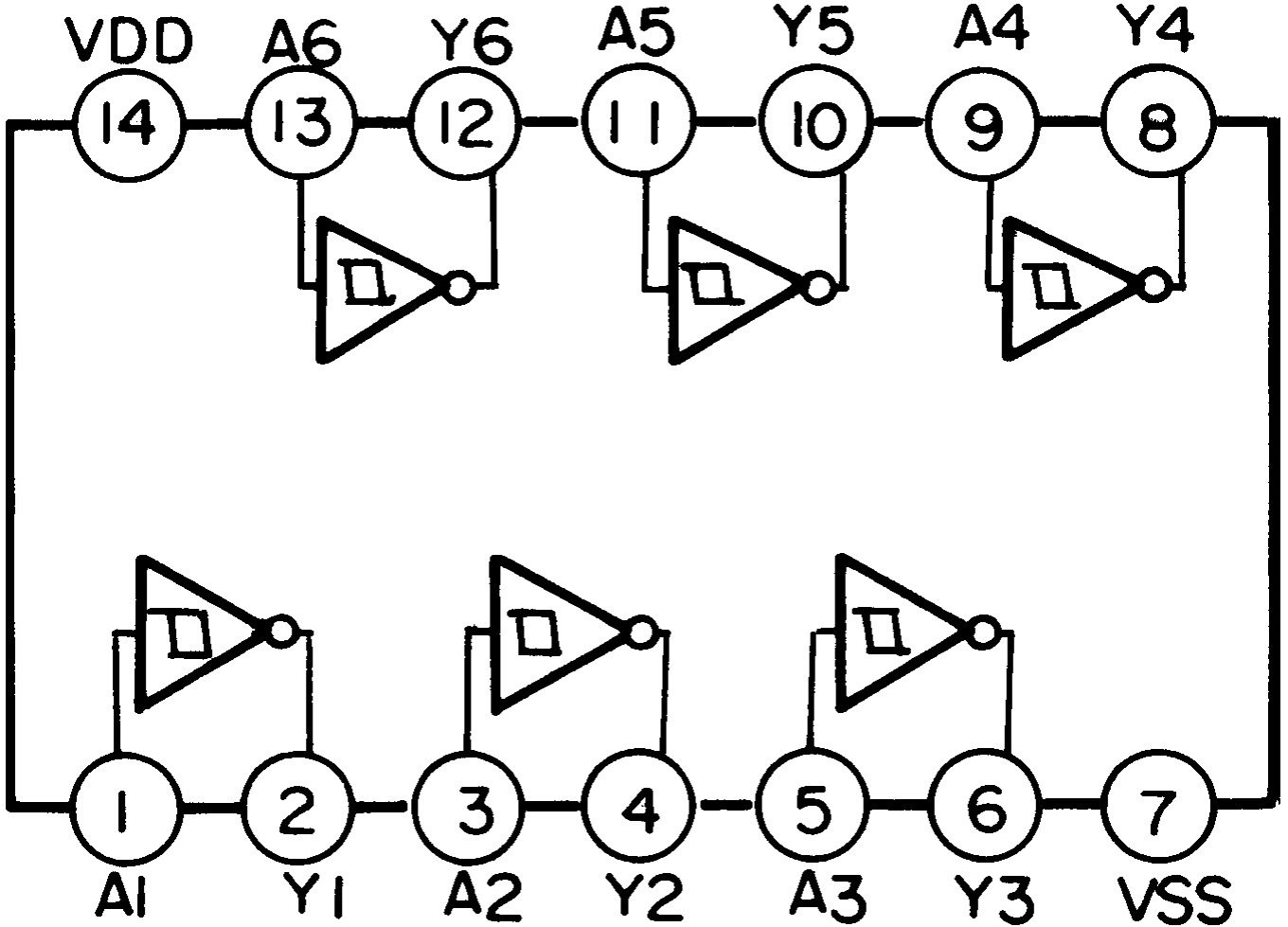
VDD
A6
Y6
A5
Y5
A4
Y4
14
13
12
11
10
9
8
1
2
3
4
5
6
7
A1
Y1
A2
Y2
A3
Y3
VSS

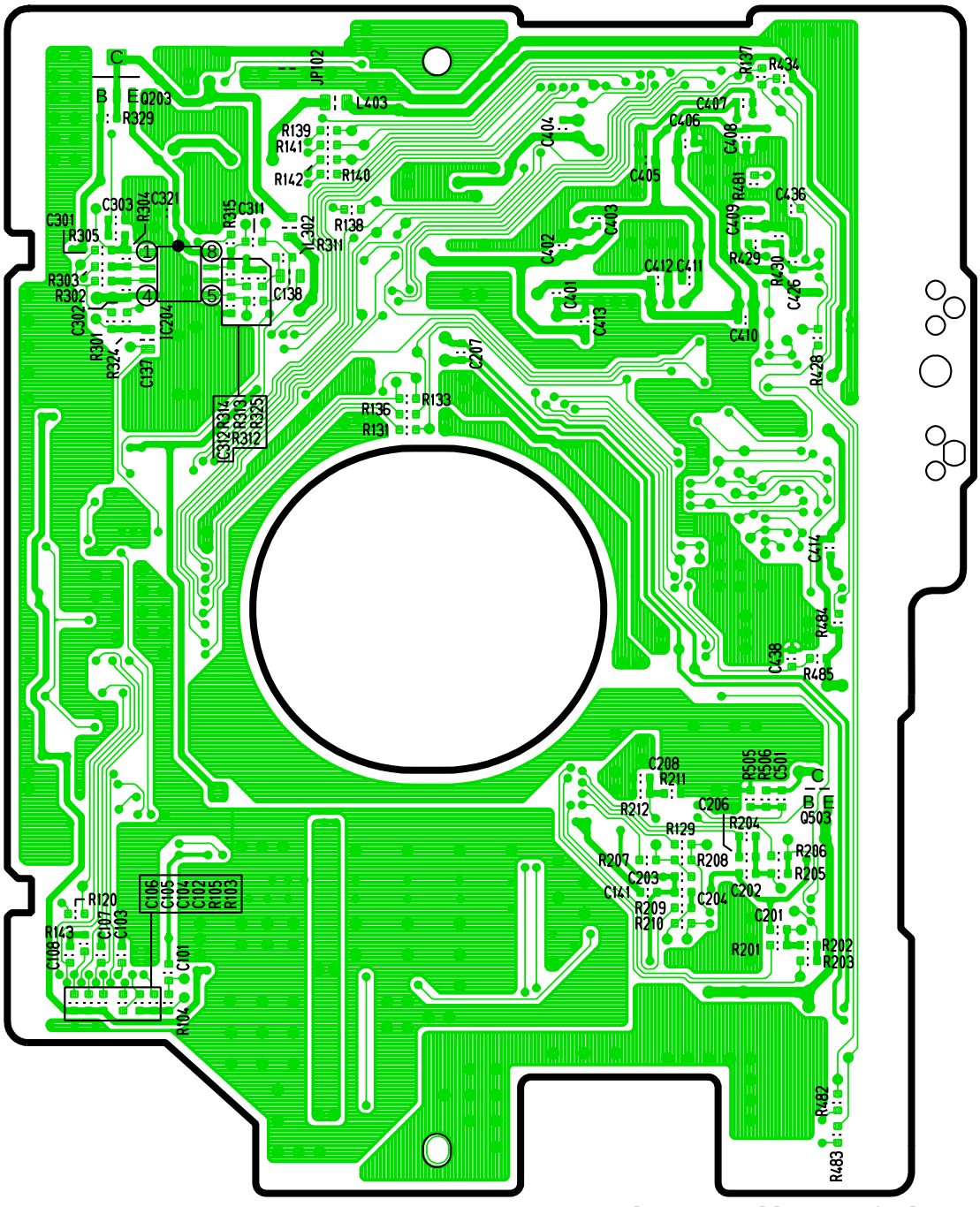

[3032-14-05] [Bottom View]

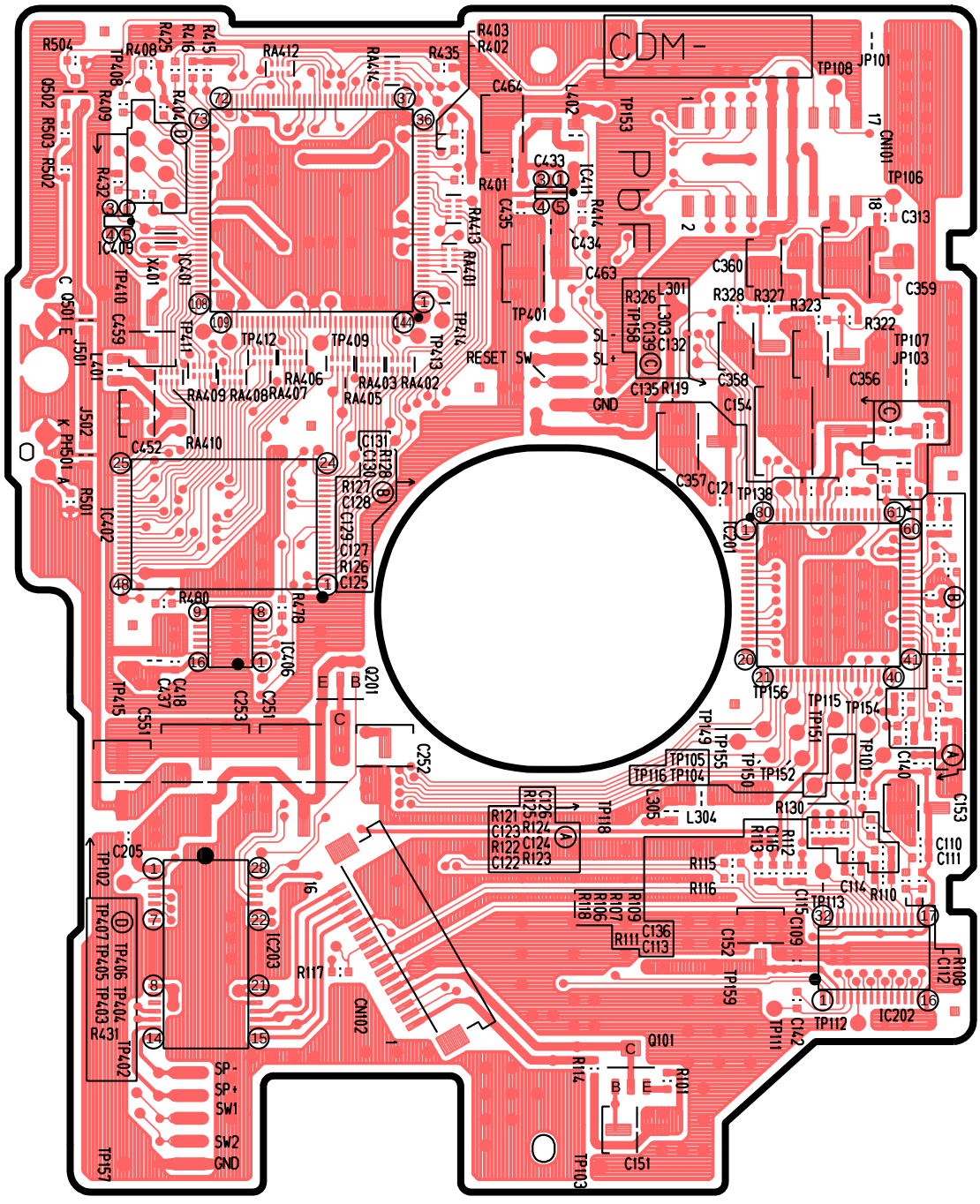

[3032-14-05] [Top View]

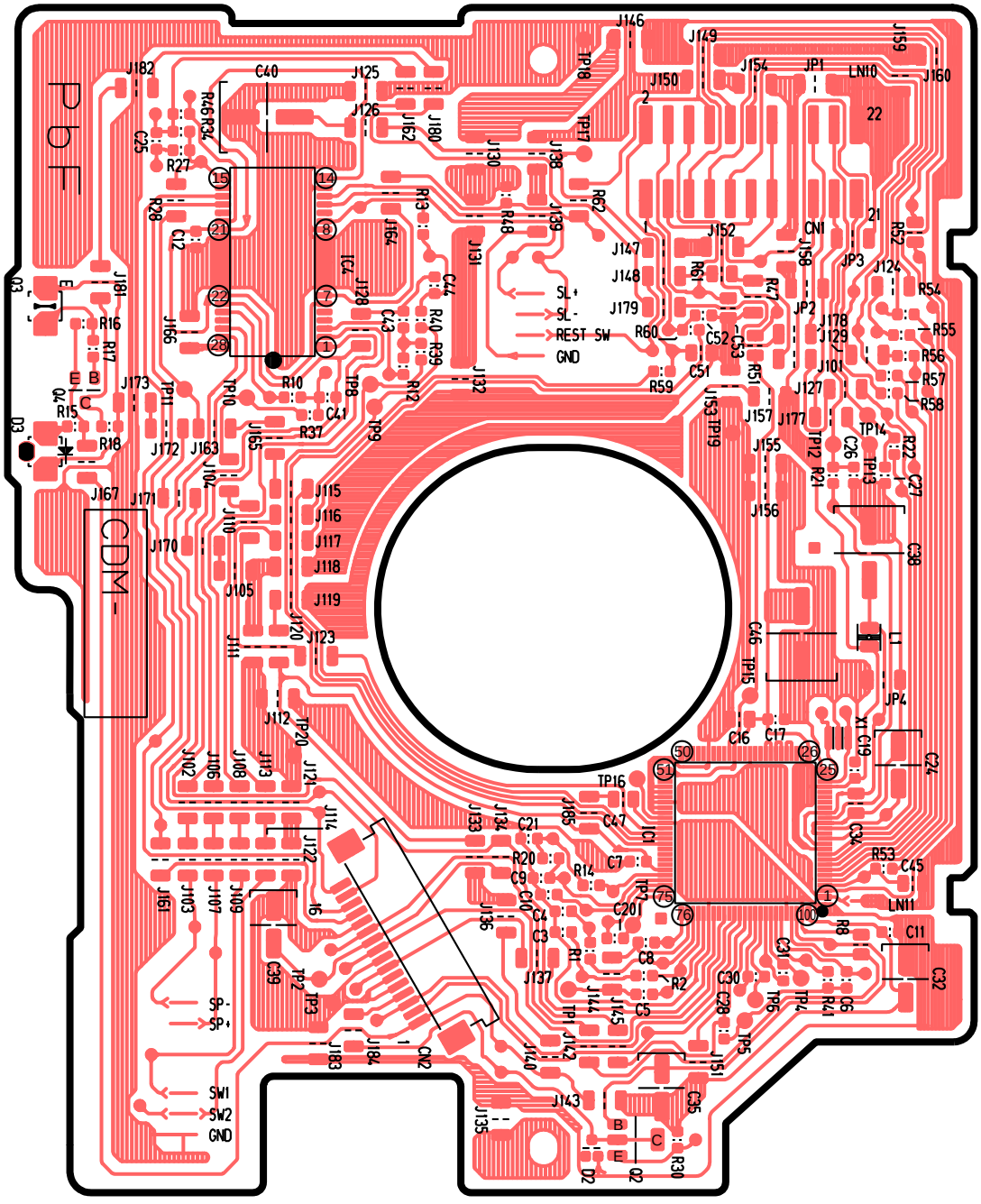

[3032-14-07] [Top View]

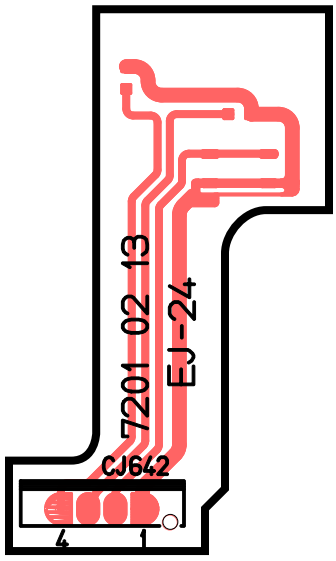

[7201-02-13]
[Top View]

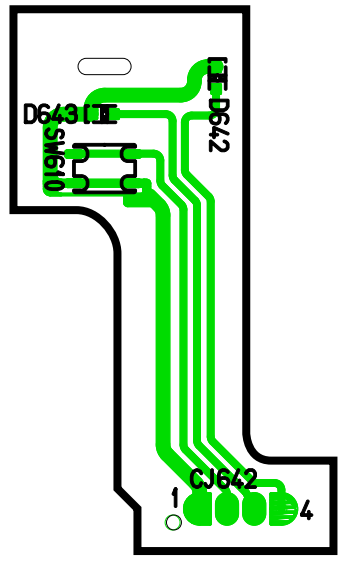

[7201-02-13]
[Bottom View]

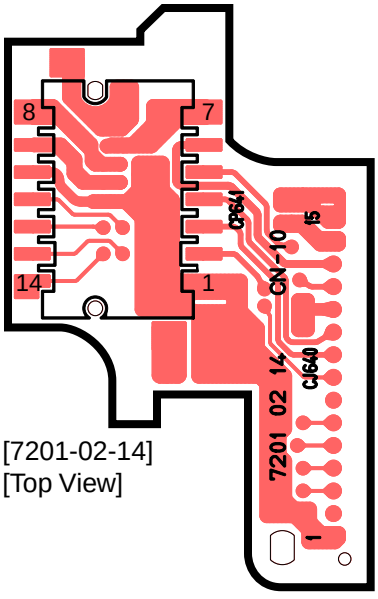

[7201-02-14]
[Top View]

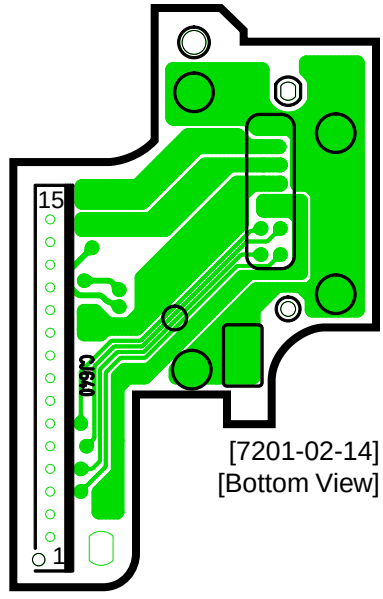

[7201-02-14]
[Bottom View]

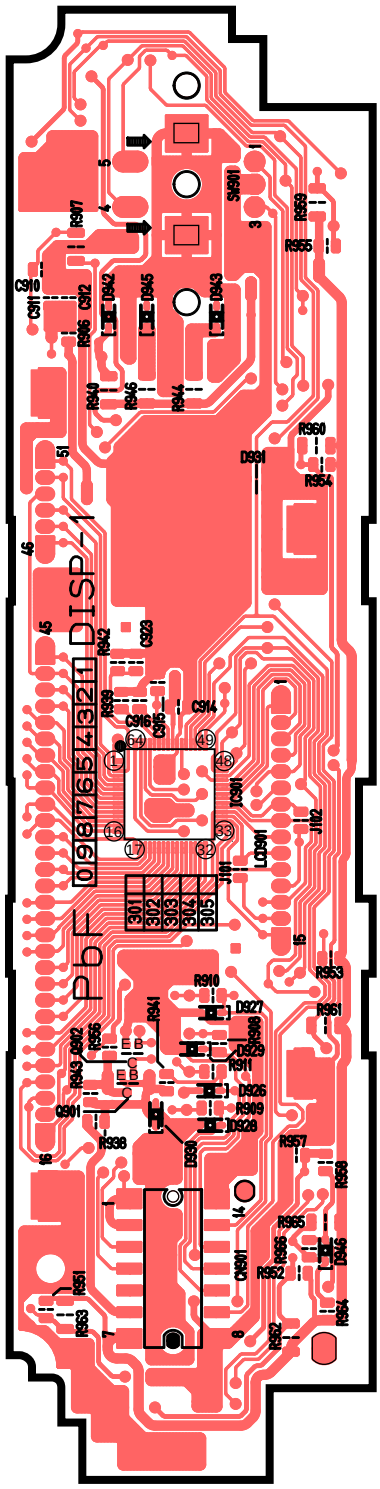

[7204-05-01] [Top View]

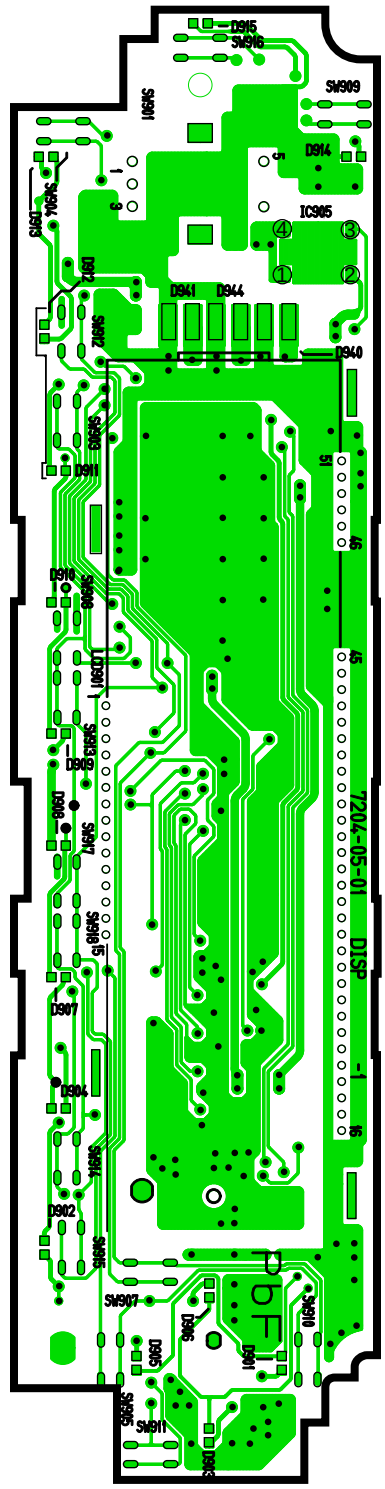

[7204-05-01] [Bottom View]

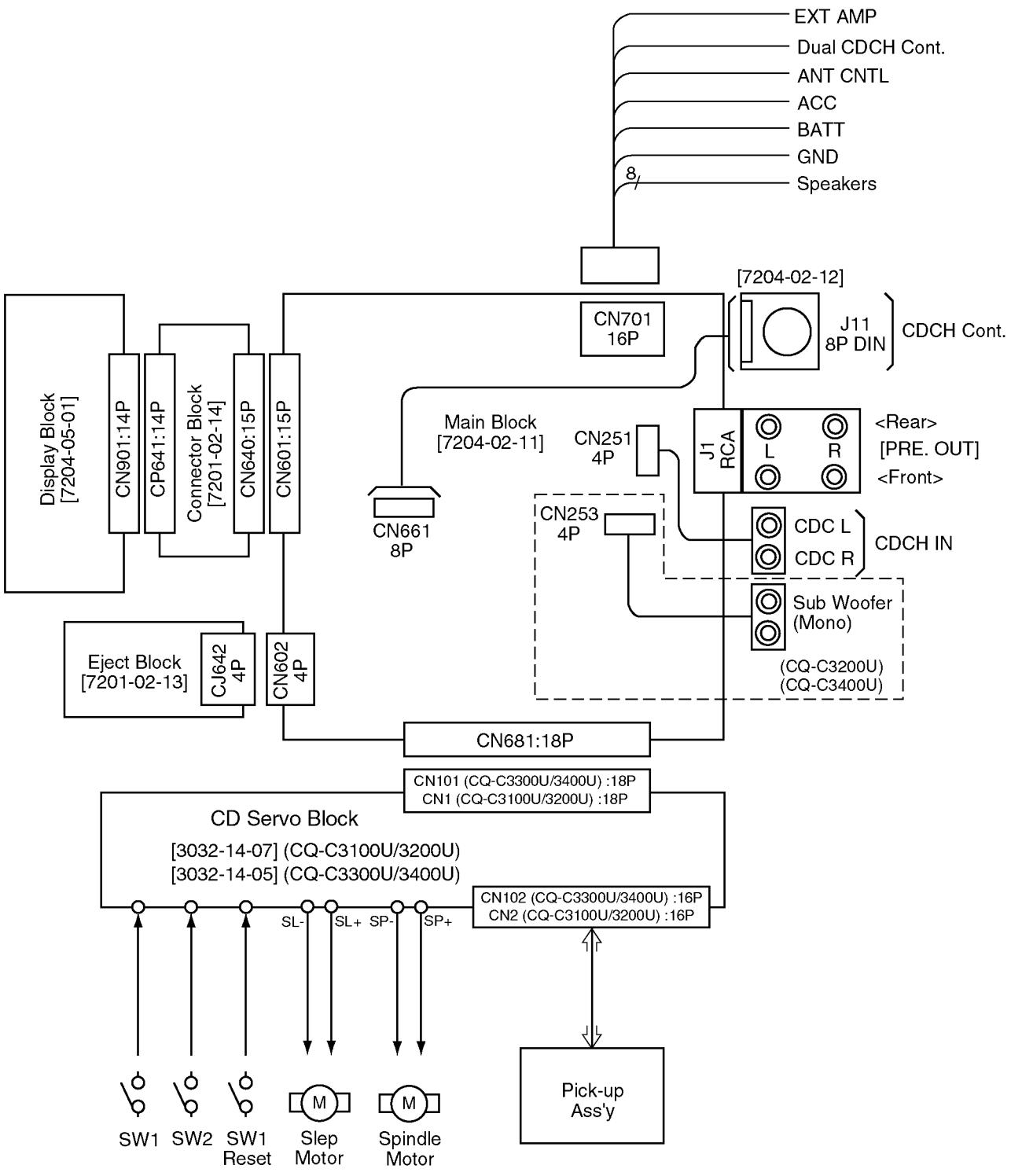
EXT AMP
Dual CDCH Cont.
ANT CNTL
ACC
BATT
GND
8
Speakers
[7204-02-12]
CN701
16P
J11
8P DIN
CDCH Cont.
Display Block
[7204-05-01]
CN901:14P
CP641:14P
Connector Block
[7201-02-14]
CN640:15P
CN601:15P
Main Block
[7204-02-11]
CN251
4P
J1
RCA
L
R
<Rear>
[PRE. OUT]
<Front>
CN661
8P
CN253
4P
CDC L
CDC R
CDCH IN
Sub Woofer
(Mono)
(CQ-C3200U)
(CQ-C3400U)
Eject Block
[7201-02-13]
CJ642
4P
CN602
4P
CN681:18P
CN101 (CQ-C3300U/3400U) :18P
CN1 (CQ-C3100U/3200U) :18P
CD Servo Block
[3032-14-07] (CQ-C3100U/3200U)
[3032-14-05] (CQ-C3300U/3400U)
CN102 (CQ-C3300U/3400U) :16P
CN2 (CQ-C3100U/3200U) :16P
SL-
SL+
SP-
SP+
SW1
SW2
SW1
Reset
Slep
Motor
Spindle
Motor
M
M
Pick-up
Ass'y

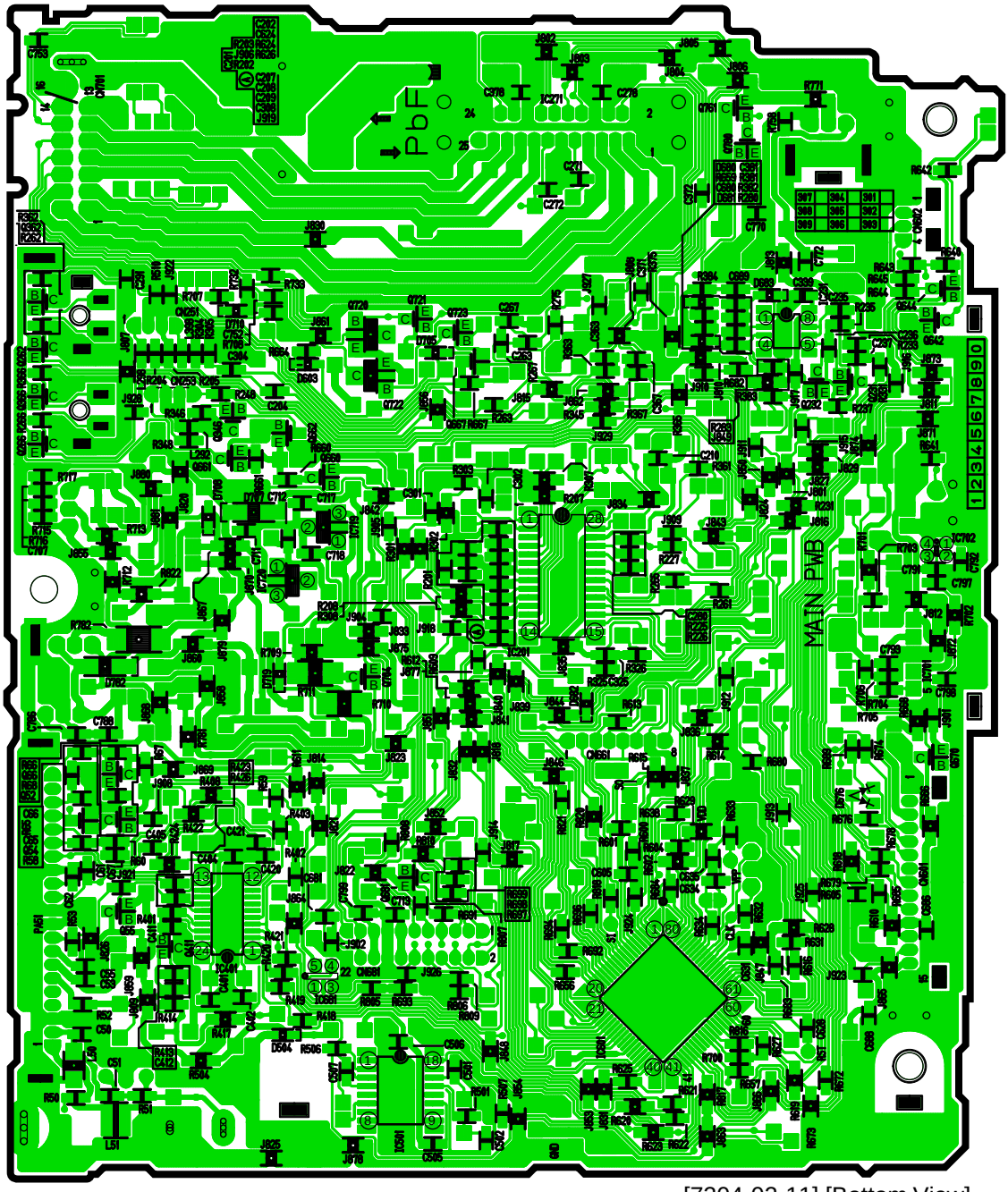

[7204-02-11] [Bottom View]

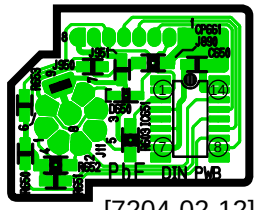

[7204-02-12]
[Bottom View]

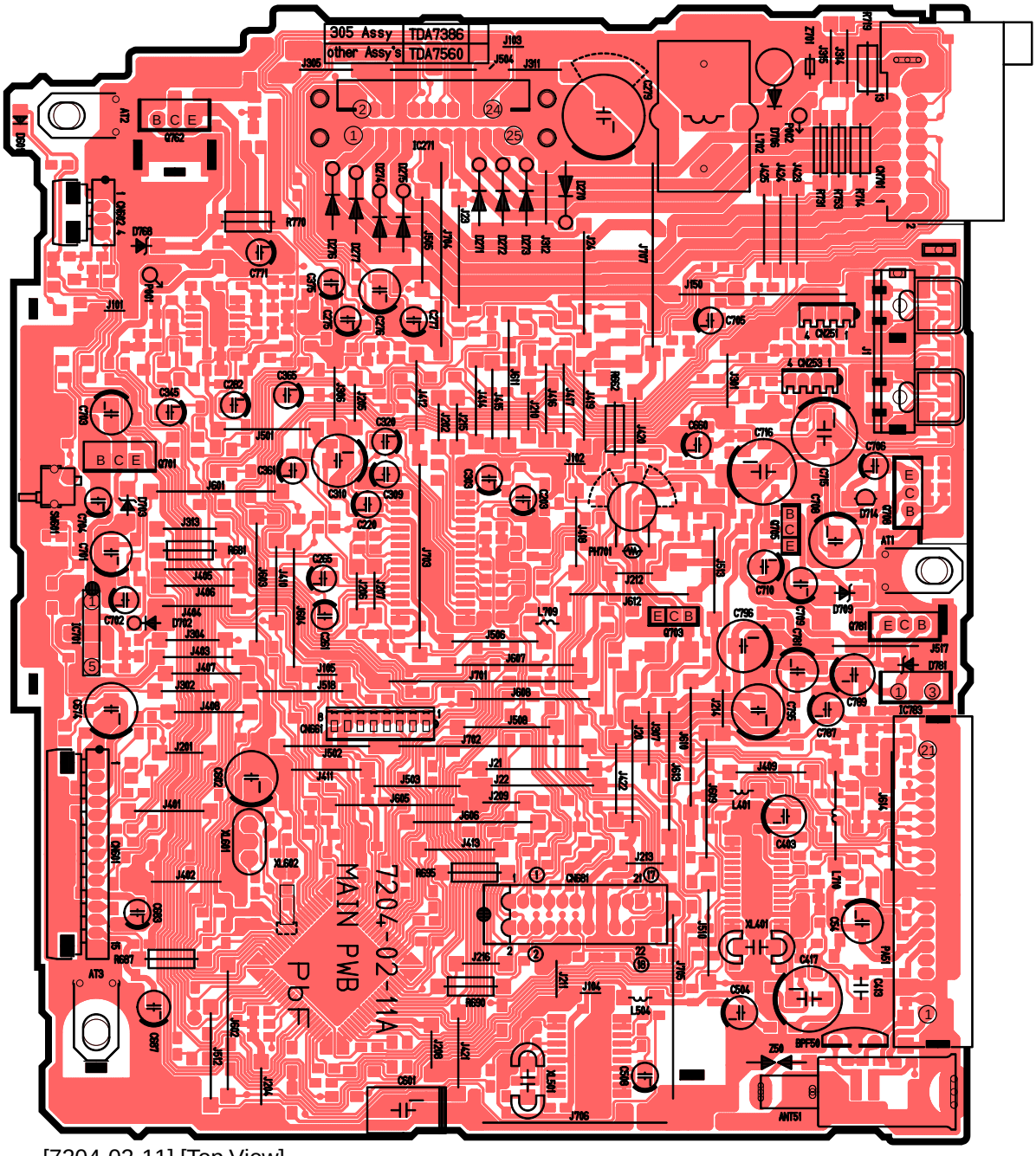

[7204-02-11] [Top View]

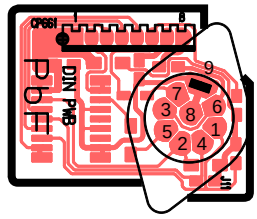

[7204-02-12] [Top View]

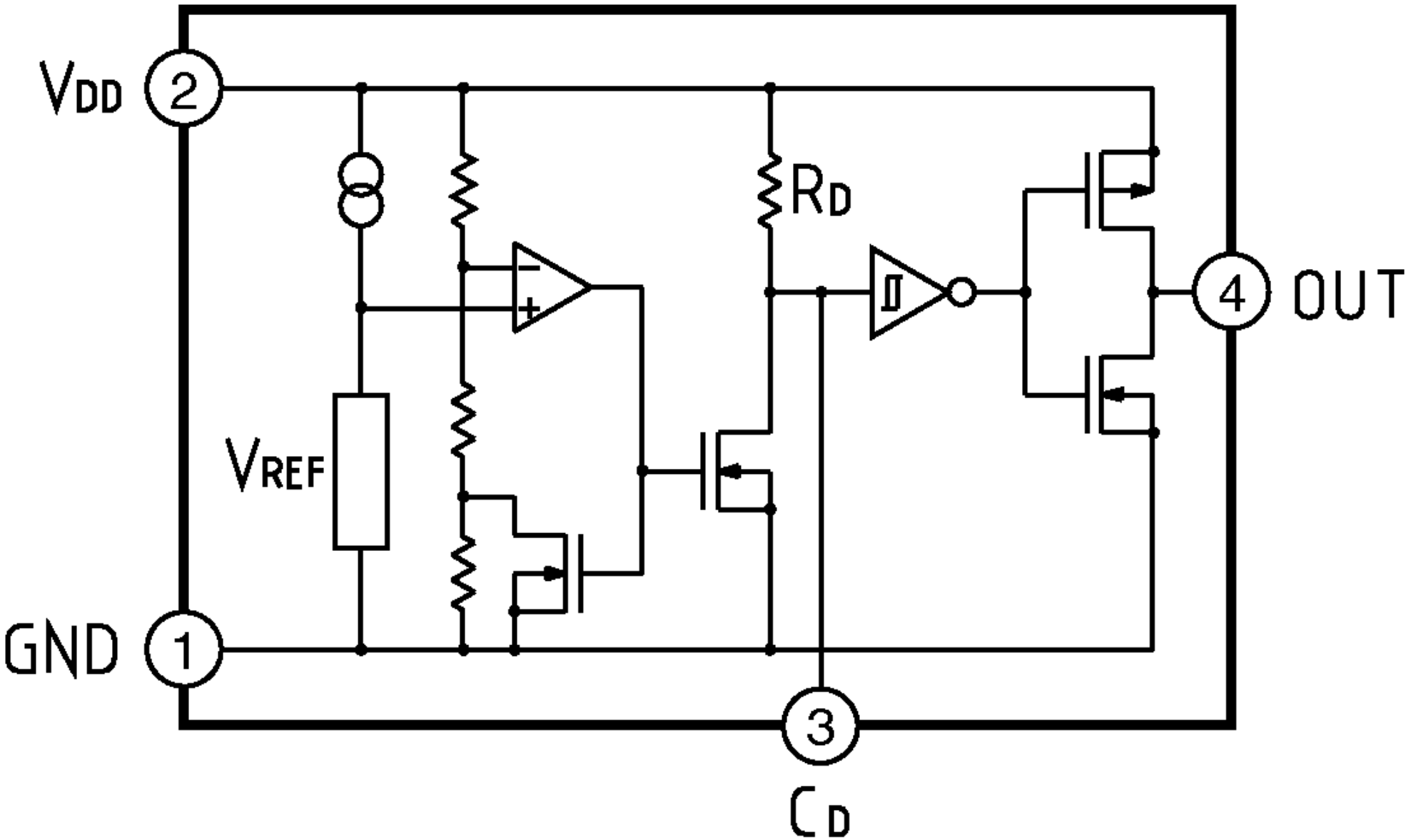
VDD
2
RD
4
OUT
VREF
GND
1
3
CD