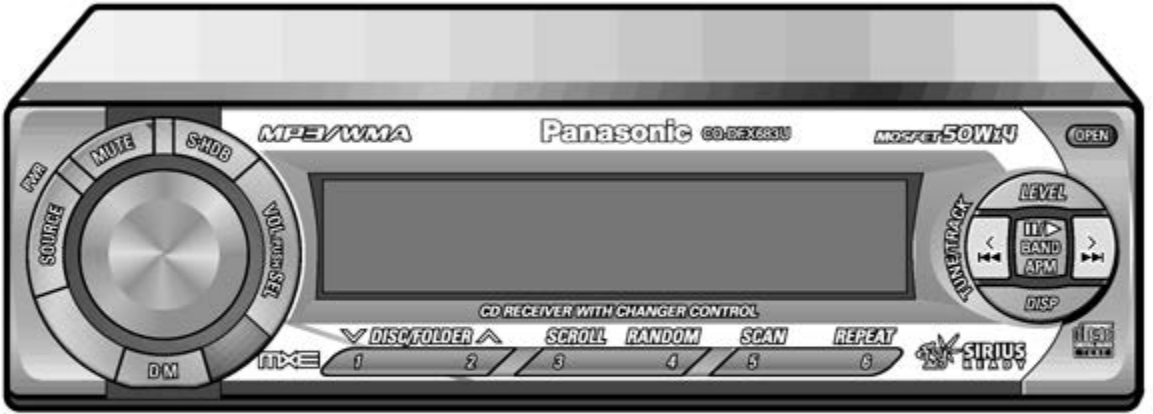
MP3/WMA
Panasonic
CQ-DFX683U
MOSFET 50W×4
OPEN
PWR
MUTE
S.HDB
SOURCE
VOLUME SET
DM
LEVEL
TUNE/TRACK
BAND
APM
DISP
CD RECEIVER WITH CHANGER CONTROL
DISC/FOLDER
SCROLL
RANDOM
SCAN
REPEAT
1
2
3
4
5
6
SIRIUS
READY

(CQ-DFX683U)

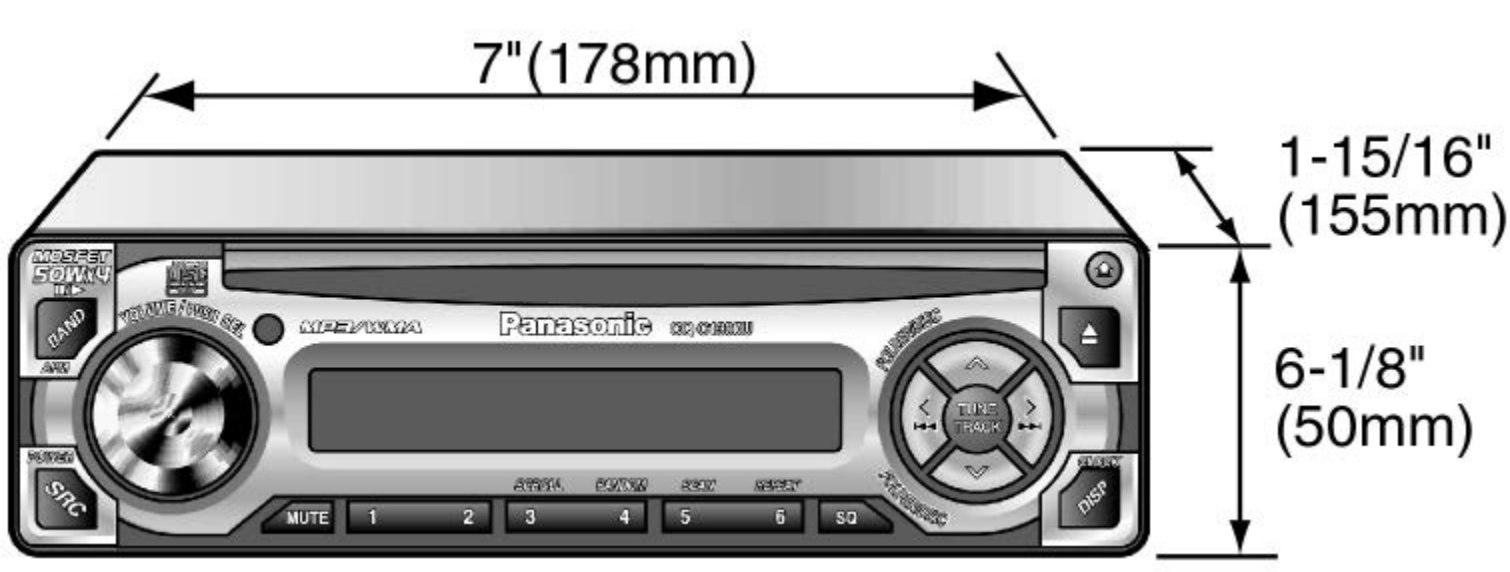
7"(178mm)
1-15/16"
(155mm)
6-1/8"
(50mm)
MOSFET
50W x 4
BAND
AMS
SRC
VOLUME PUSH SET
MP3/WMA
Panasonic
TUNE
TRACK
DISP
MUTE
1
2
3
4
5
6
SQ

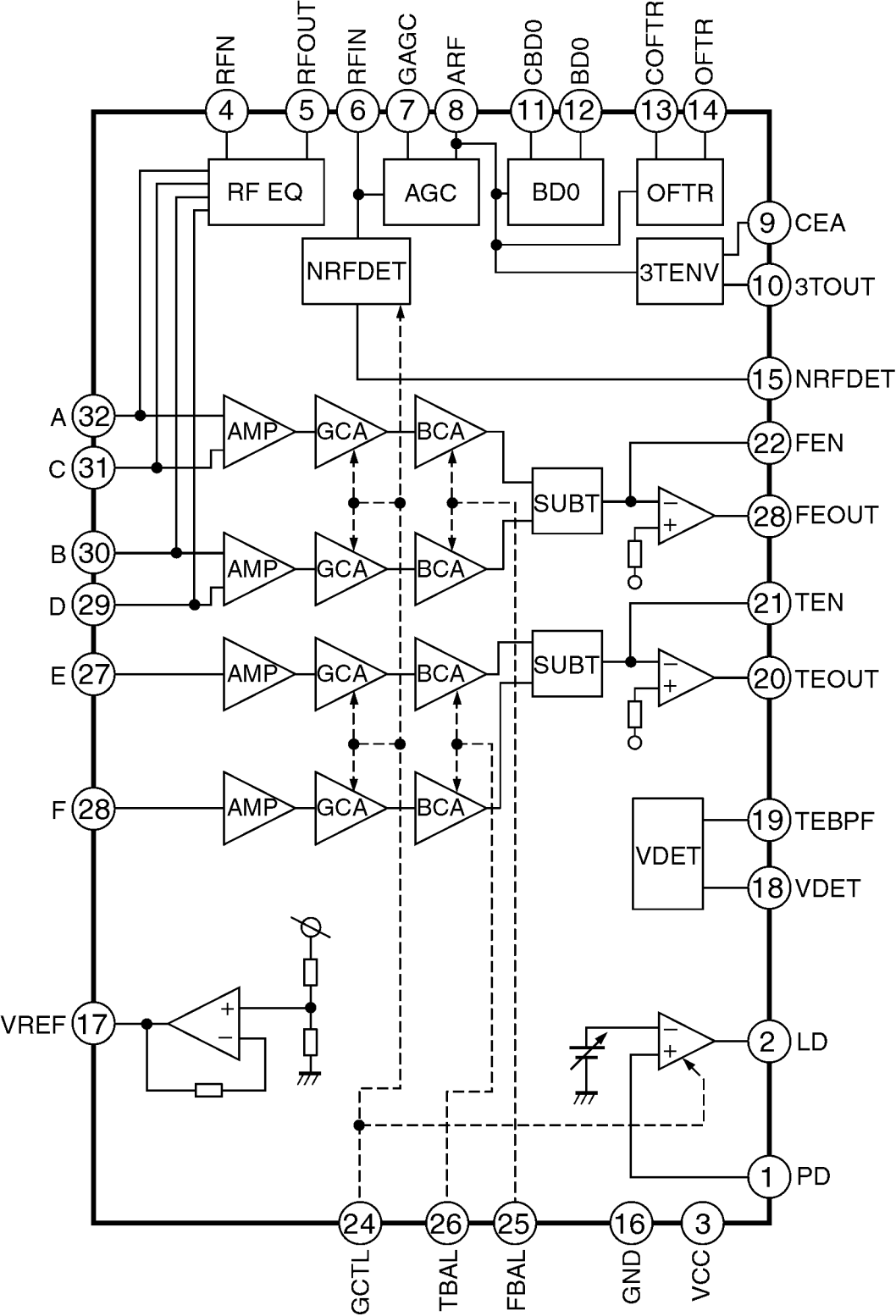
RFN
RFOUT
RFIN
GAGC
ARF
CBD0
BD0
COFTR
OFTR
4
5
6
7
8
11
12
13
14
RF EQ
AGC
BD0
OFTR
NRFDET
3TENV
9 CEA
10 3TOUT
15 NRFDET
A 32
C 31
B 30
D 29
E 27
F 28
AMP
GCA
BCA
SUBT
22 FEN
28 FEOUT
21 TEN
20 TEOUT
VDET
19 TEBPF
18 VDET
VREF 17
2 LD
1 PD
24
26
25
16
3
GCTL
TBAL
FBAL
GND
VCC

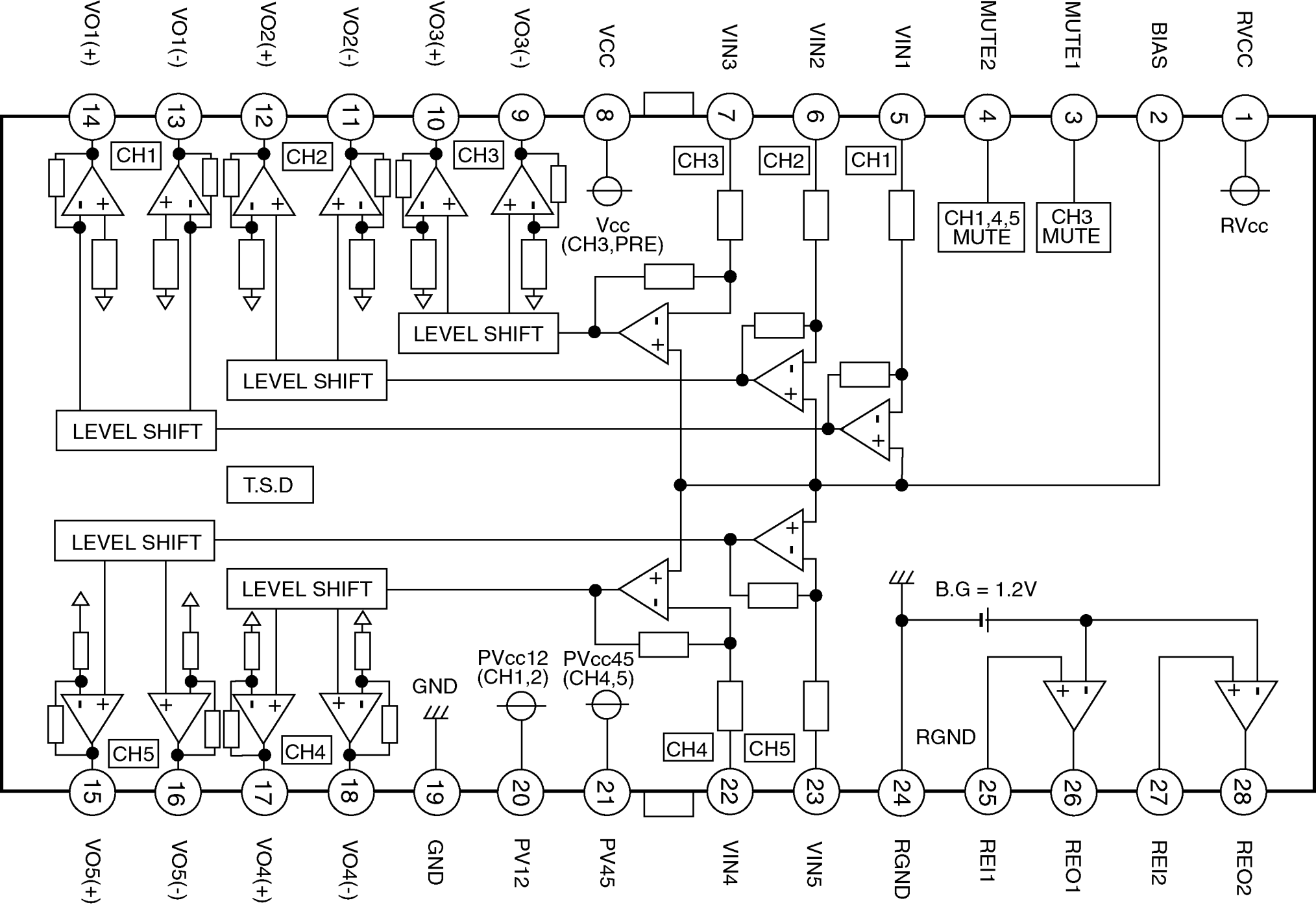
VO1(+)
VO1(-)
VO2(+)
VO2(-)
VO3(+)
VO3(-)
VCC
VIN3
VIN2
VIN1
MUTE2
MUTE1
BIAS
RVCC
14
13
12
11
10
9
8
7
6
5
4
3
2
1
CH1
CH2
CH3
CH3
CH2
CH1
Vcc
(CH3,PRE)
CH1,4,5
MUTE
CH3
MUTE
RVcc
LEVEL SHIFT
LEVEL SHIFT
LEVEL SHIFT
T.S.D
LEVEL SHIFT
LEVEL SHIFT
B.G = 1.2V
PVcc12
(CH1,2)
PVcc45
(CH4,5)
GND
CH5
CH4
CH4
CH5
RGND
15
16
17
18
19
20
21
22
23
24
25
26
27
28
VO5(+)
VO5(-)
VO4(+)
VO4(-)
GND
PV12
PV45
VIN4
VIN5
RGND
REI1
REO1
REI2
REO2

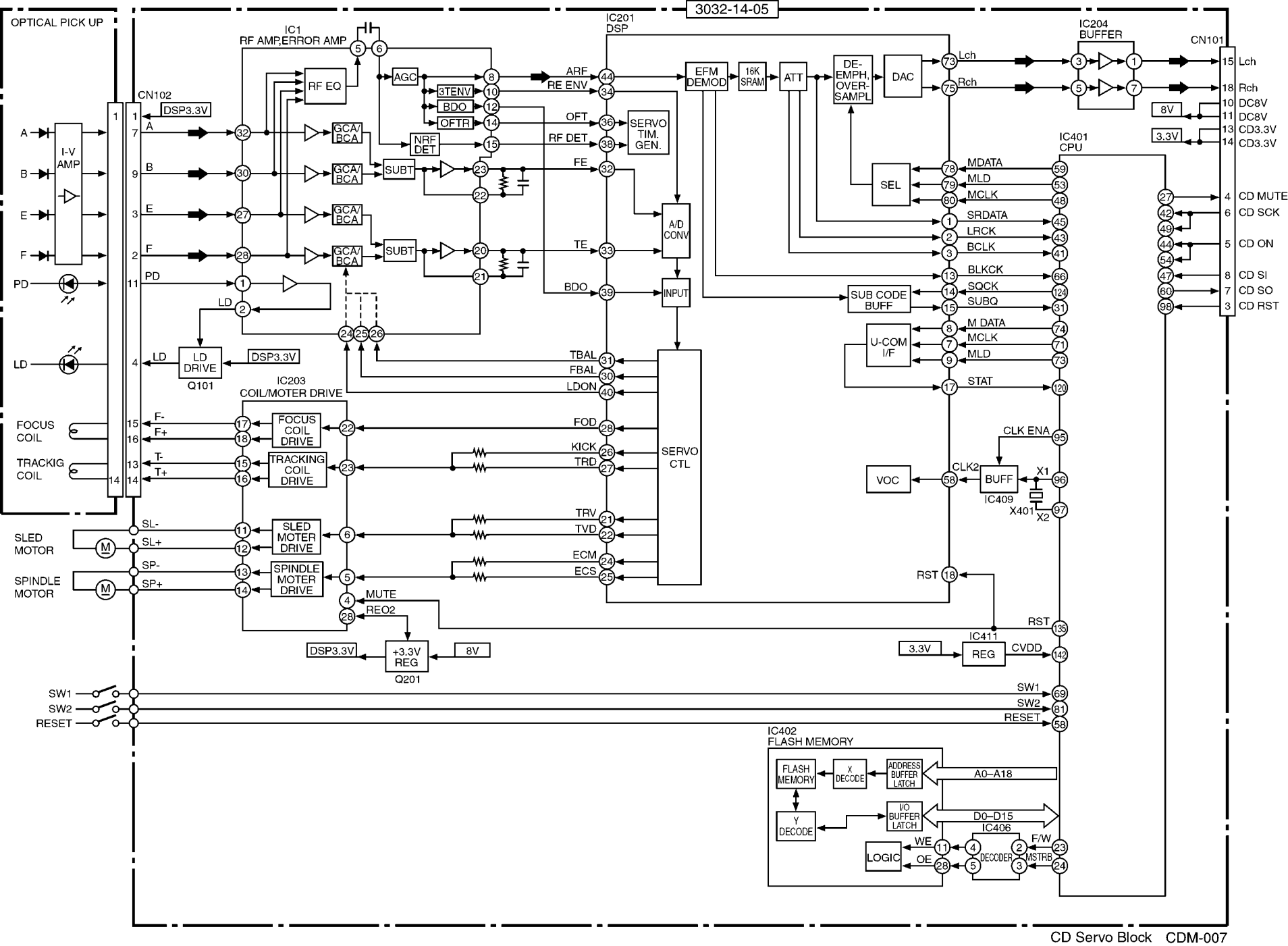

CD Servo Block CDM-007

Printed in Japan 2003.12 (K)
(Recycled Paper)

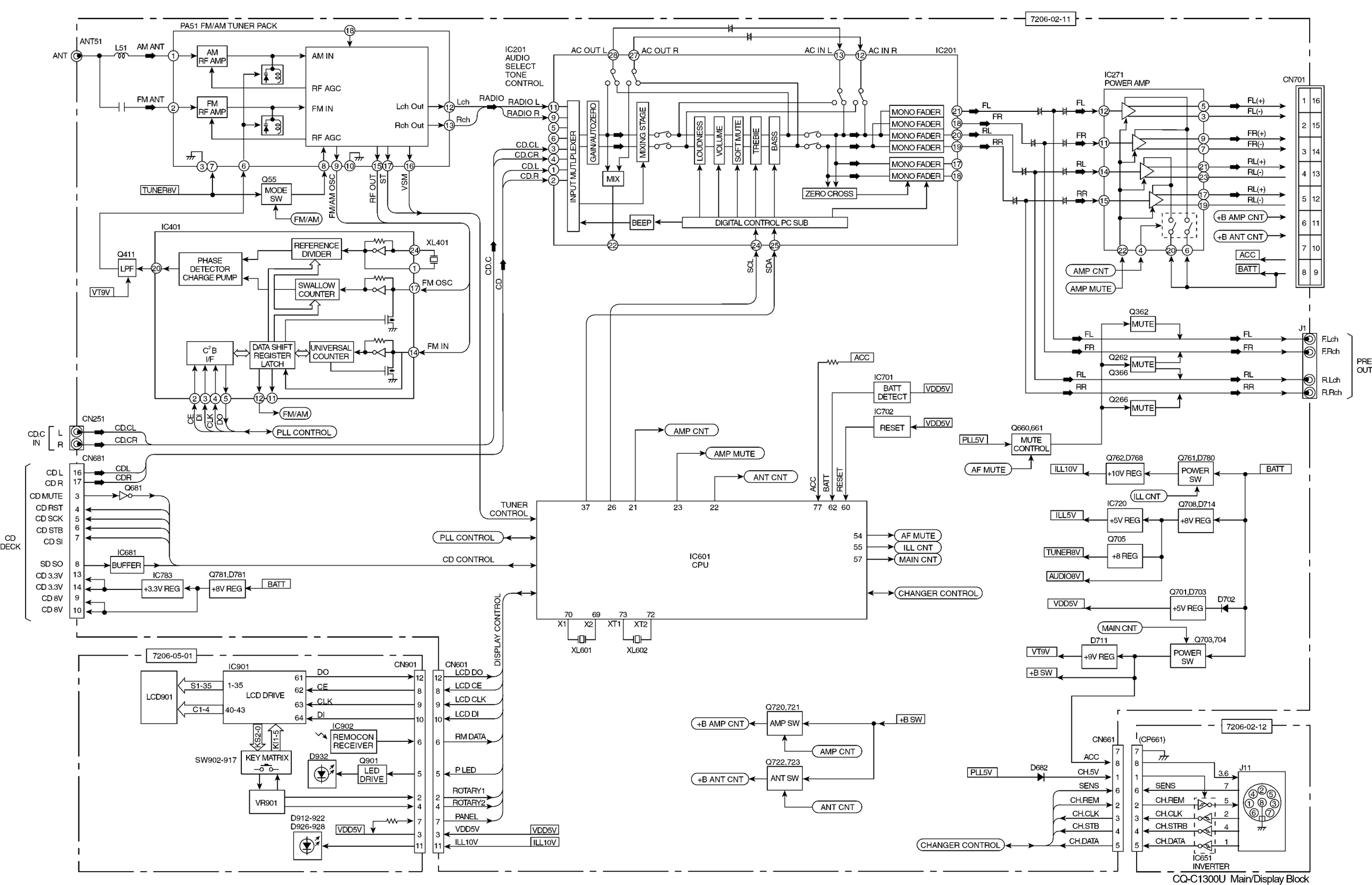

CQ-C1300U Main/Display Block

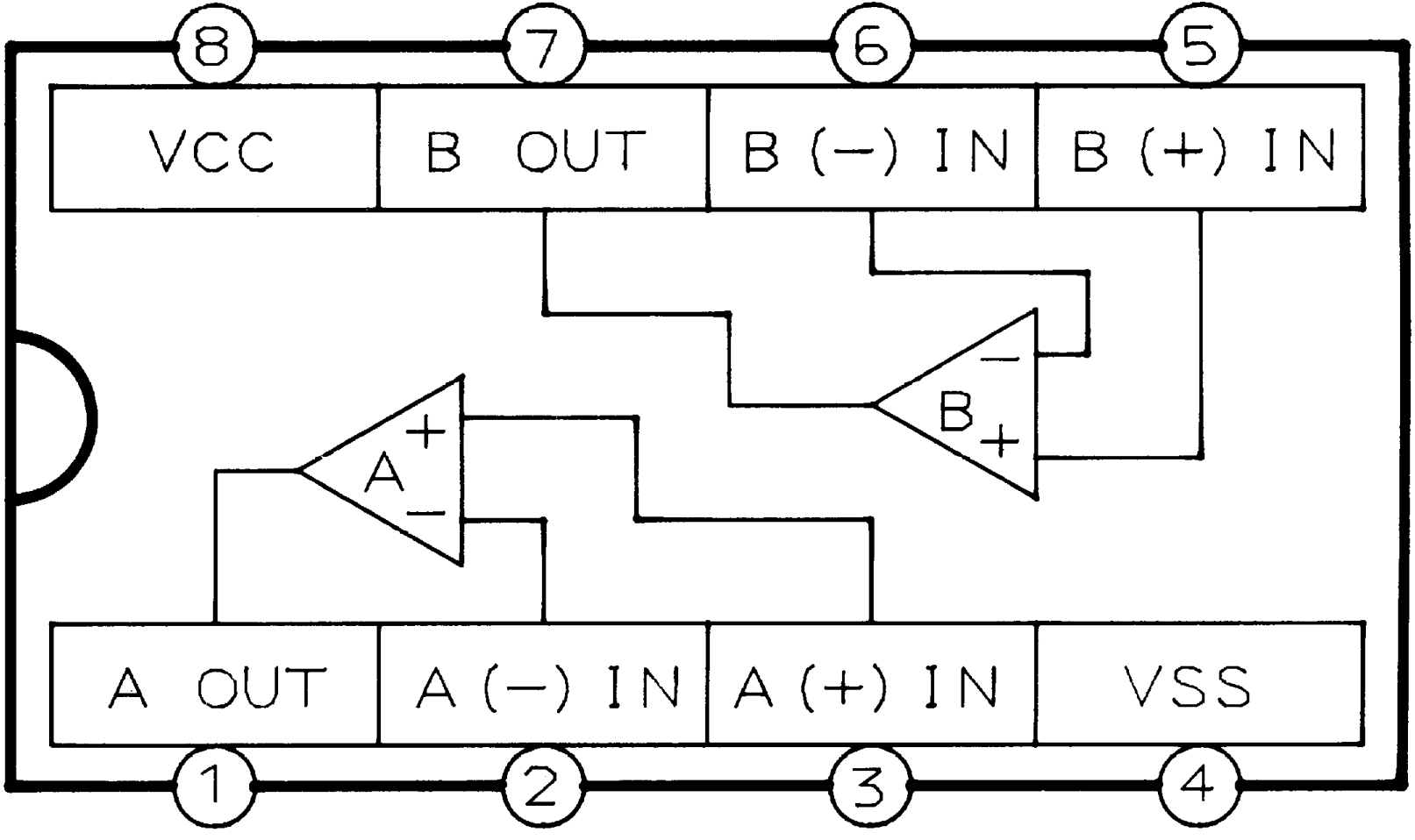
8
7
6
5
VCC
B OUT
B (−) IN
B (+) IN
B
−
+
A
+
−
A OUT
A (−) IN
A (+) IN
VSS
1
2
3
4

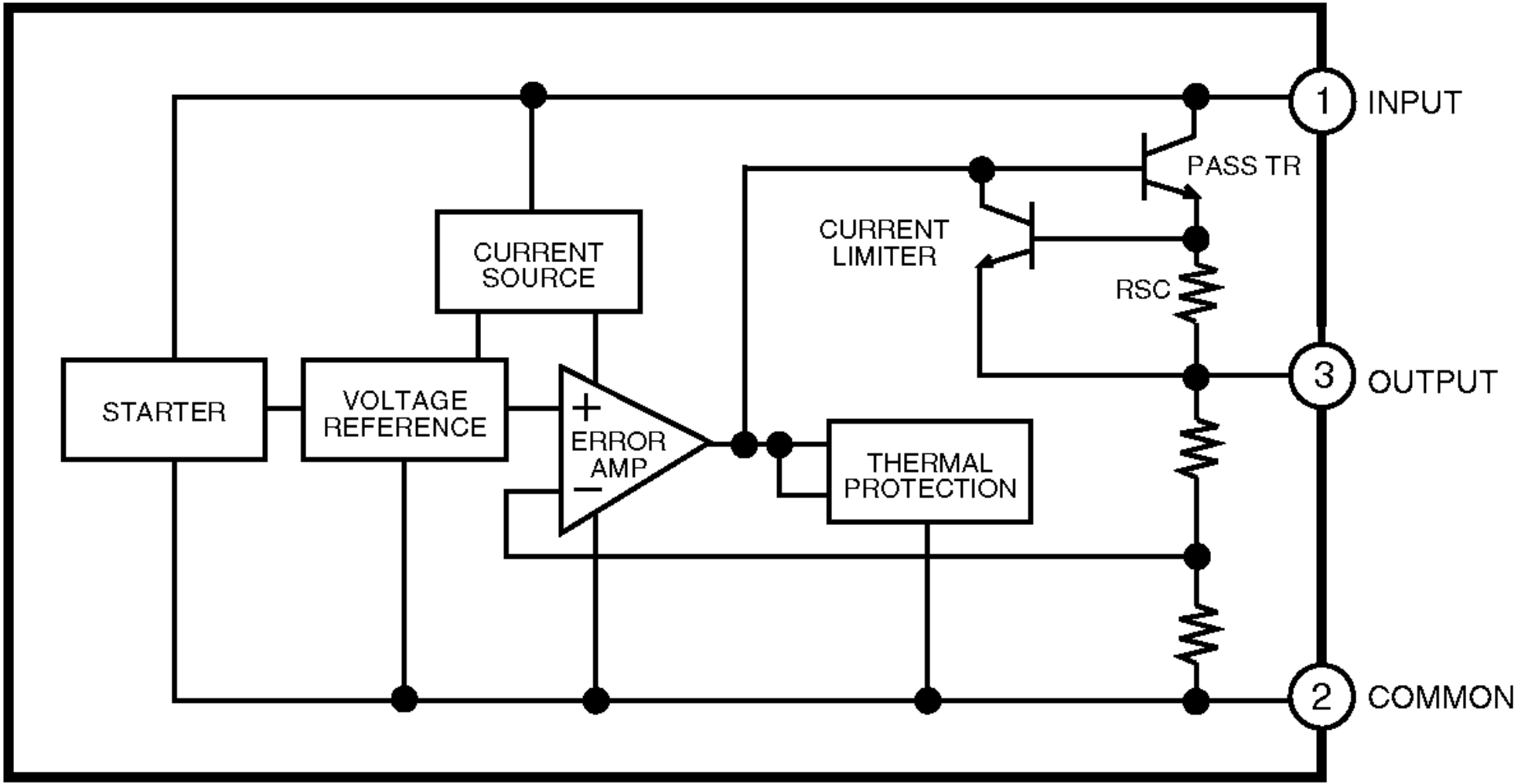
1
INPUT
PASS TR
CURRENT
LIMITER
CURRENT
SOURCE
RSC
3
OUTPUT
STARTER
VOLTAGE
REFERENCE
+
ERROR
AMP
−
THERMAL
PROTECTION
2
COMMON

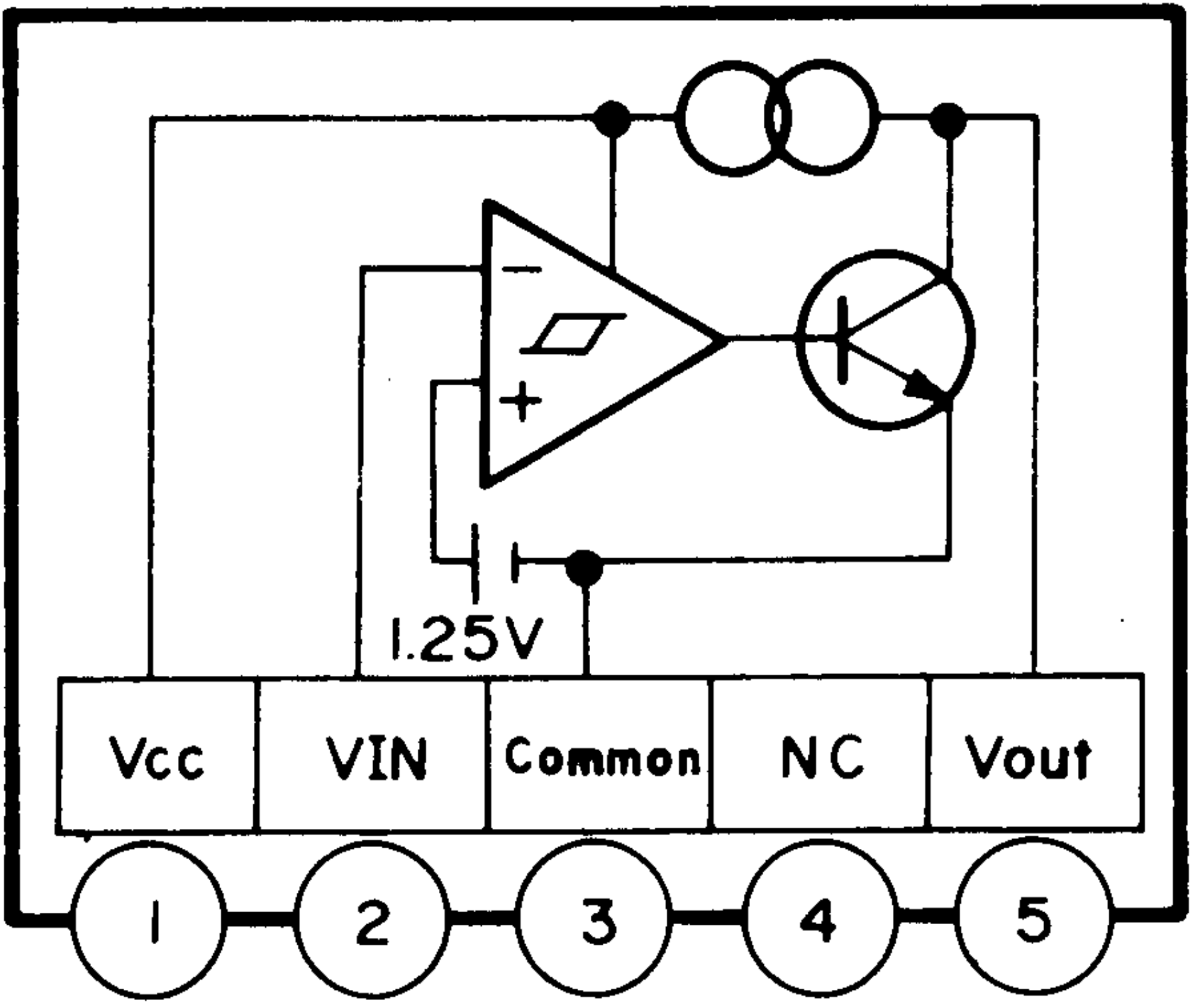
1.25V
Vcc
VIN
Common
NC
Vout
1
2
3
4
5

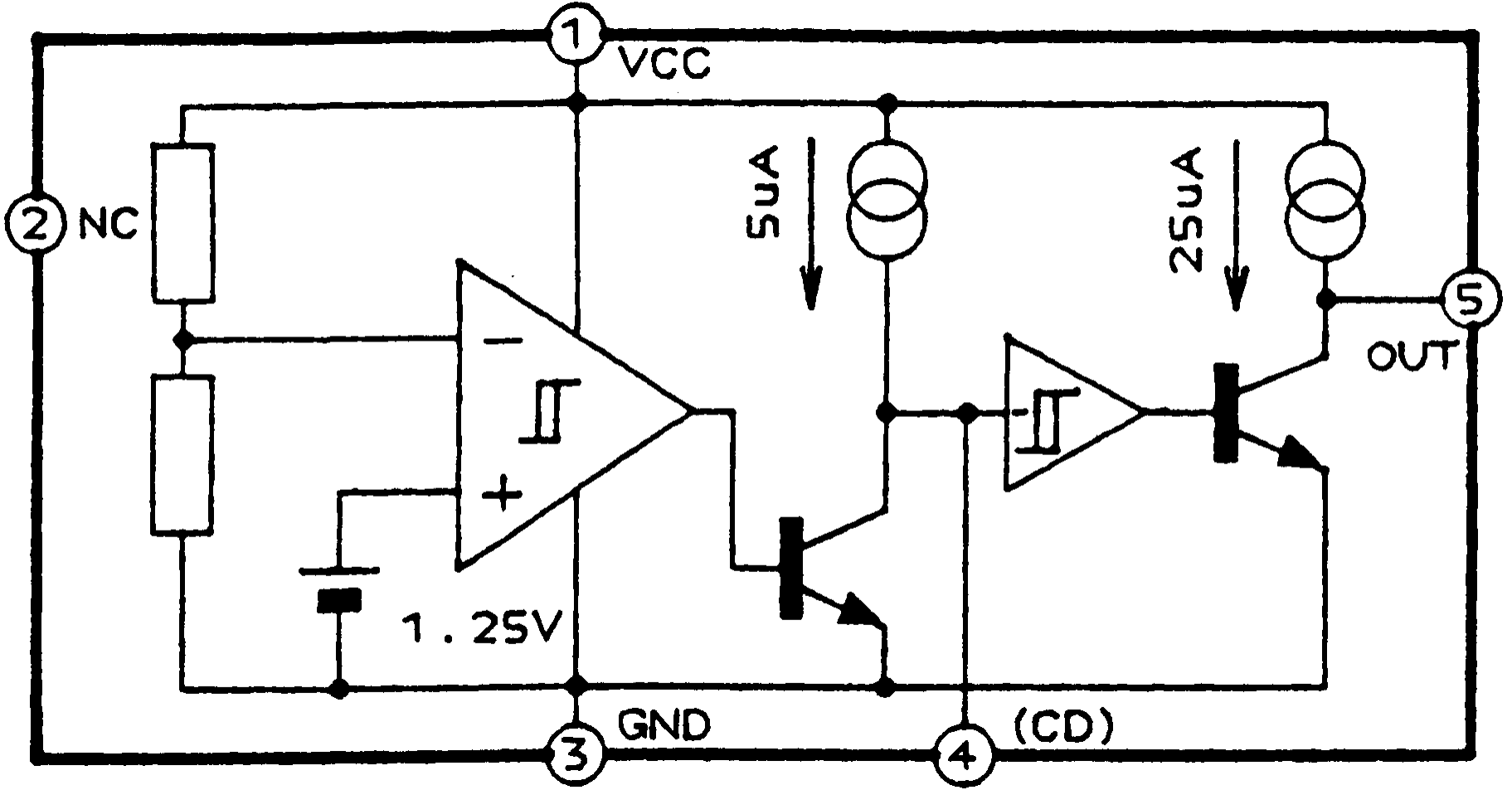
1
VCC
2
NC
5uA
25uA
5
OUT
1.25V
3
GND
4
(CD)

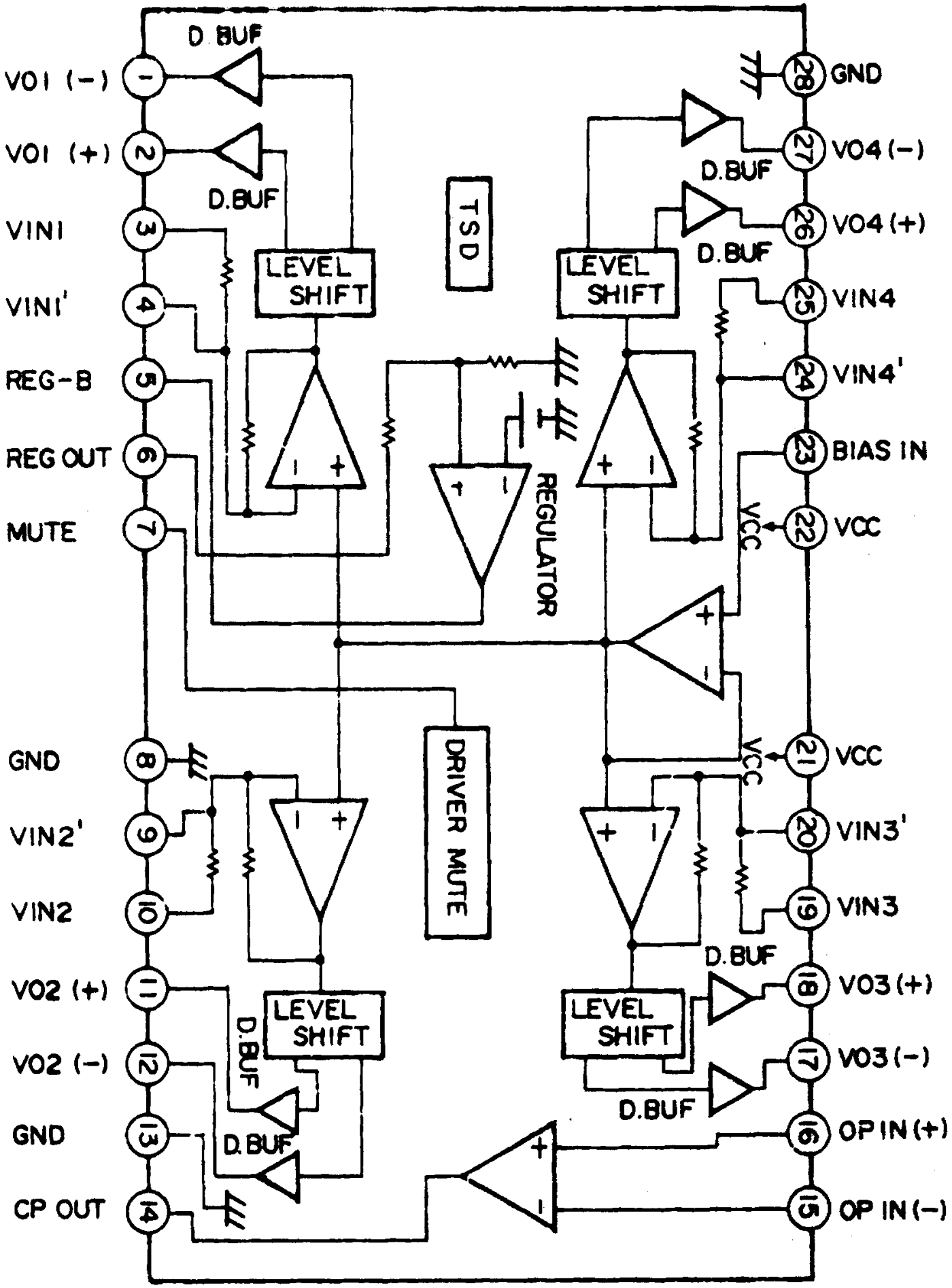
VO1 (−)
VO1 (+)
VIN1
VIN1'
REG-B
REG OUT
MUTE
GND
VIN2'
VIN2
VO2 (+)
VO2 (−)
GND
CP OUT
GND
VO4 (−)
VO4 (+)
VIN4
VIN4'
BIAS IN
VCC
VCC
VIN3'
VIN3
VO3 (+)
VO3 (−)
OP IN (+)
OP IN (−)
D. BUF
D.BUF
LEVEL SHIFT
TSD
REGULATOR
DRIVER MUTE

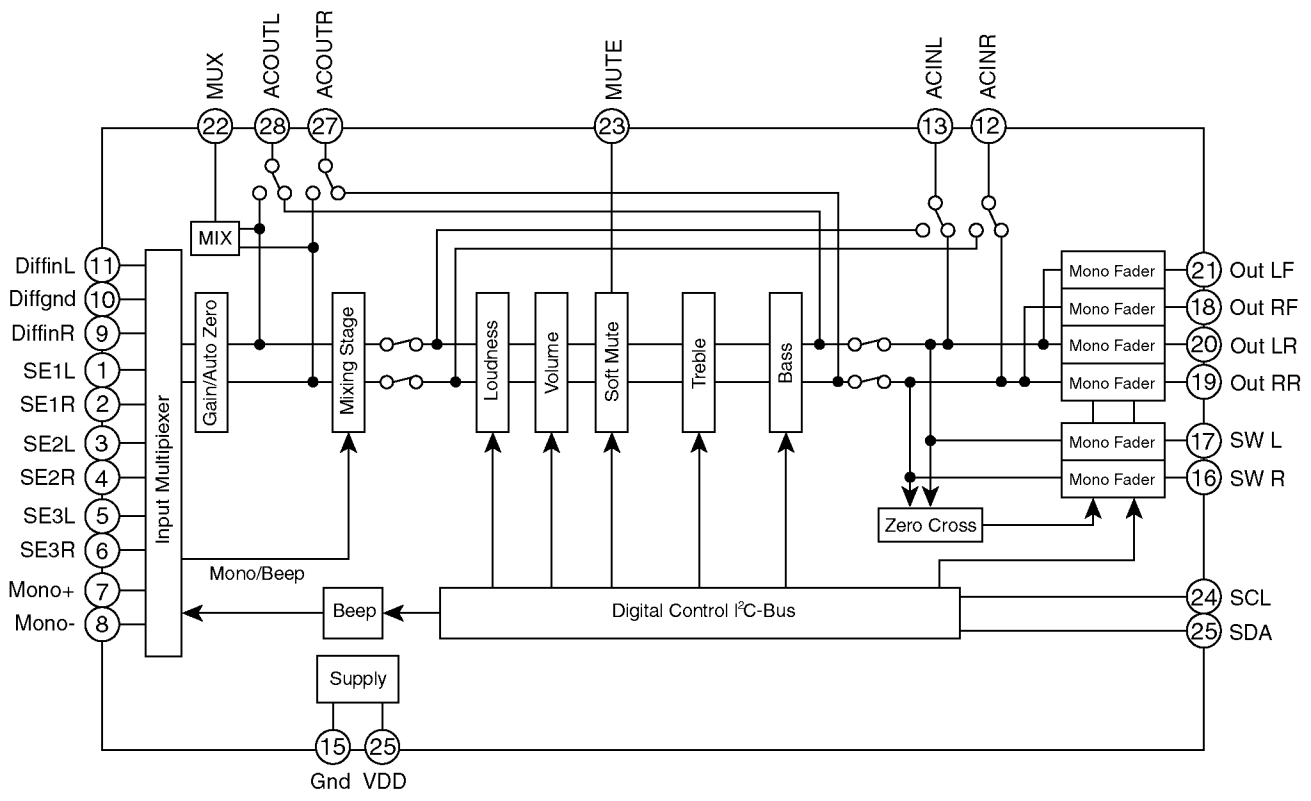
MUX
ACOUTL
ACOUTR
MUTE
ACINL
ACINR
22
28
27
23
13
12
MIX
DiffinL
Diffgnd
DiffinR
SE1L
SE1R
SE2L
SE2R
SE3L
SE3R
Mono+
Mono-
11
10
9
1
2
3
4
5
6
7
8
Input Multipiexer
Gain/Auto Zero
Mixing Stage
Loudness
Volume
Soft Mute
Treble
Bass
Mono Fader
Mono Fader
Mono Fader
Mono Fader
Mono Fader
Mono Fader
21
18
20
19
17
16
Out LF
Out RF
Out LR
Out RR
SW L
SW R
Zero Cross
Mono/Beep
Beep
Digital Control I²C-Bus
24
25
SCL
SDA
Supply
15
25
Gnd
VDD

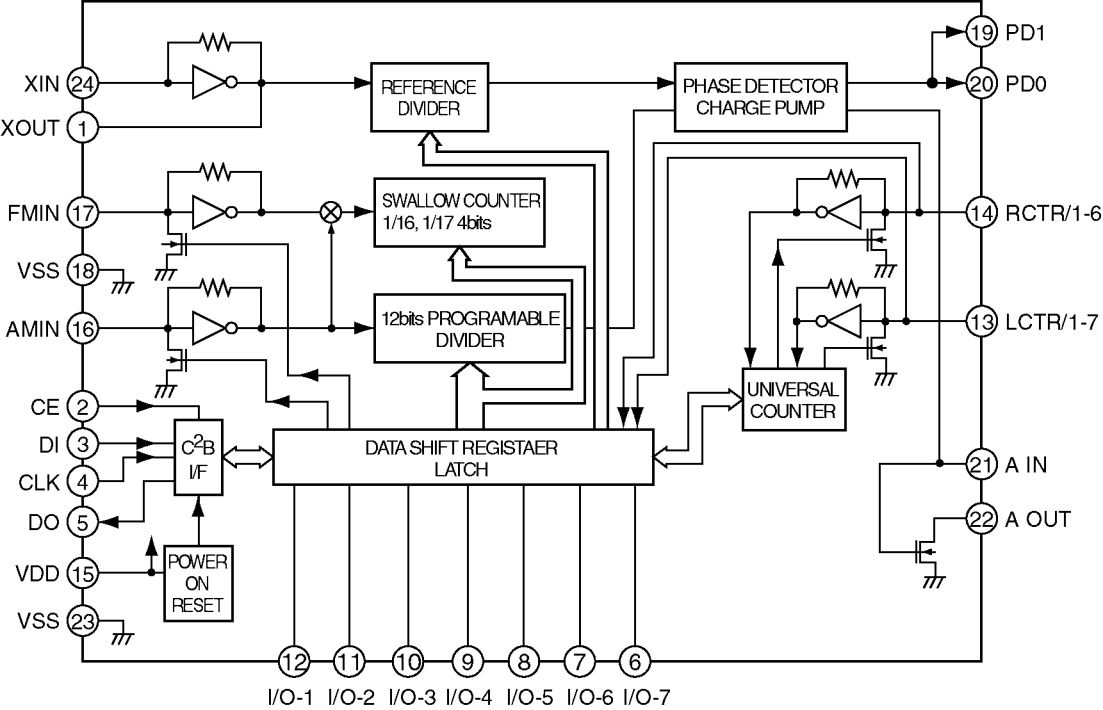
XIN
24
XOUT
1
FMIN
17
VSS
18
AMIN
16
CE
2
DI
3
CLK
4
DO
5
VDD
15
VSS
23
REFERENCE DIVIDER
PHASE DETECTOR CHARGE PUMP
SWALLOW COUNTER 1/16, 1/17 4bits
12bits PROGRAMABLE DIVIDER
C2B I/F
DATA SHIFT REGISTAER LATCH
POWER ON RESET
UNIVERSAL COUNTER
19
PD1
20
PD0
14
RCTR/1-6
13
LCTR/1-7
21
A IN
22
A OUT
12
11
10
9
8
7
6
I/O-1
I/O-2
I/O-3
I/O-4
I/O-5
I/O-6
I/O-7

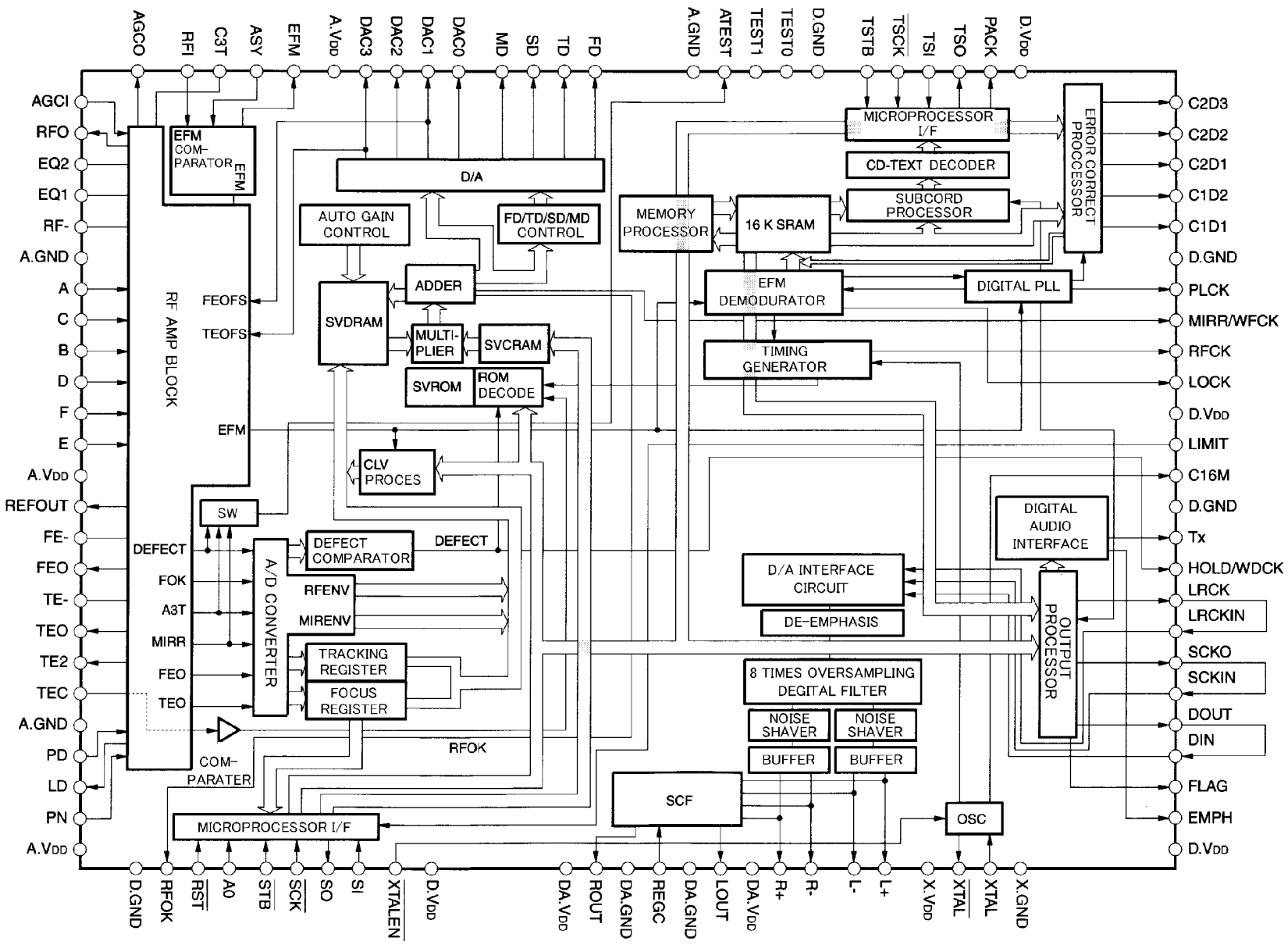
AGCO
RFI
C3T
ASY
EFM
A.VDD
DAC3
DAC2
DAC1
DAC0
MD
SD
TD
FD
A.GND
ATEST
TEST1
TEST0
D.GND
TSTB
TSCK
TSI
TSO
PACK
D.VDD
AGCI
RFO
EQ2
EQ1
RF-
A.GND
A
C
B
D
F
E
A.VDD
REFOUT
FE-
FEO
TE-
TEO
TE2
TEC
A.GND
PD
LD
PN
A.VDD
C2D3
C2D2
C2D1
C1D2
C1D1
D.GND
PLCK
MIRR/WFCK
RFCK
LOCK
D.VDD
LIMIT
C16M
D.GND
Tx
HOLD/WDCK
LRCK
LRCKIN
SCKO
SCKIN
DOUT
DIN
FLAG
EMPH
D.VDD
EFM COM-PARATOR
EFM
RF AMP BLOCK
FEOFS
TEOFS
EFM
D/A
AUTO GAIN CONTROL
FD/TD/SD/MD CONTROL
ADDER
SVDRAM
MULTI-PLIER
SVCRAM
SVROM
ROM DECODE
CLV PROCES
SW
DEFECT
FOK
A3T
MIRR
FEO
TEO
A/D CONVERTER
DEFECT COMPARATOR
DEFECT
RFENV
MIRENV
TRACKING REGISTER
FOCUS REGISTER
RFOK
COM-PARATER
MICROPROCESSOR I/F
MEMORY PROCESSOR
16 K SRAM
MICROPROCESSOR I/F
CD-TEXT DECODER
SUBCORD PROCESSOR
ERROR CORRECT PROCESSOR
EFM DEMODURATOR
DIGITAL PLL
TIMING GENERATOR
DIGITAL AUDIO INTERFACE
D/A INTERFACE CIRCUIT
DE-EMPHASIS
OUTPUT PROCESSOR
8 TIMES OVERSAMPLING DEGITAL FILTER
NOISE SHAVER
NOISE SHAVER
BUFFER
BUFFER
SCF
OSC
D.GND
RFOK
RST
A0
STB
SCK
SO
SI
XTALEN
D.VDD
DA.VDD
ROUT
DA.GND
REGC
DA.GND
LOUT
DA.VDD
R+
R-
L-
L+
X.VDD
XTAL
XTAL
X.GND

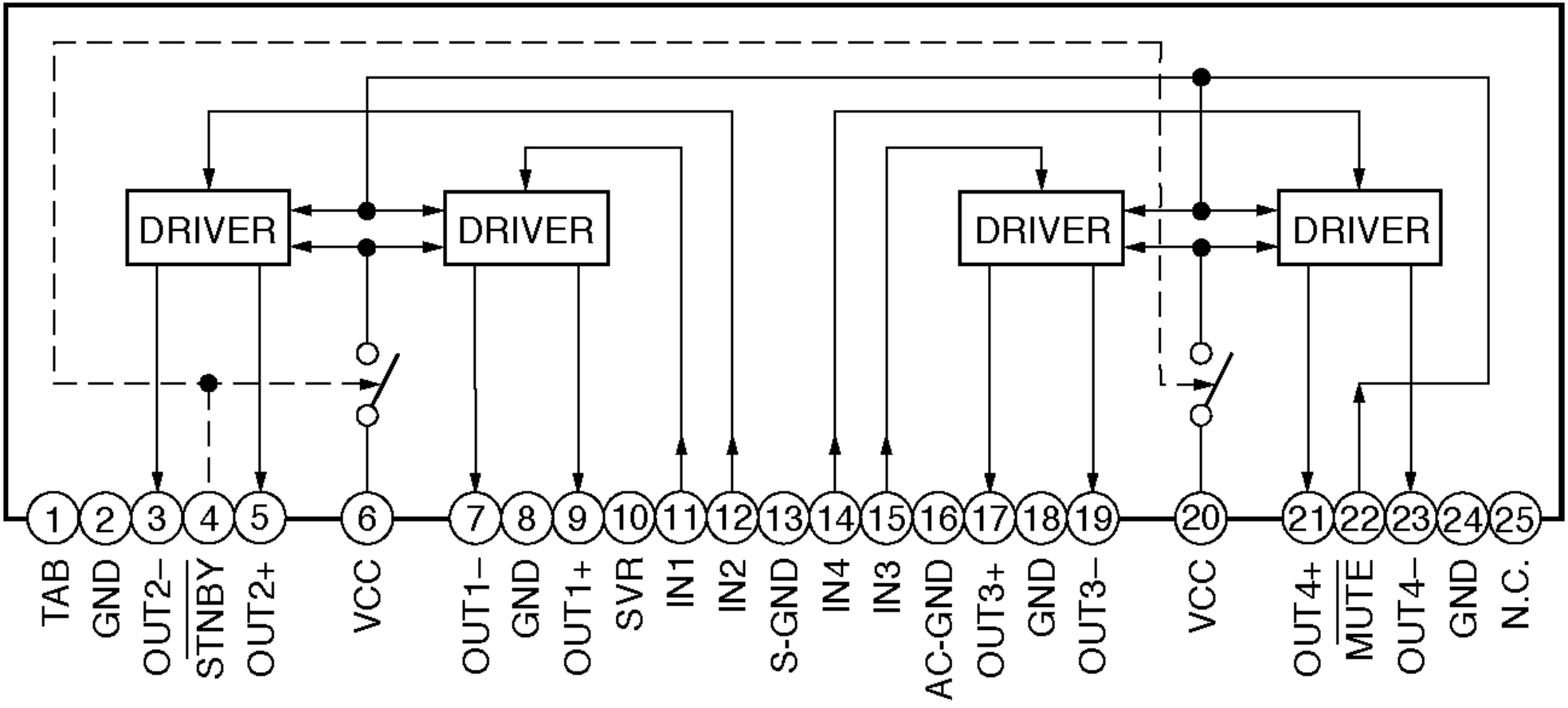
DRIVER
DRIVER
DRIVER
DRIVER
1 TAB
2 GND
3 OUT2–
4 STNBY
5 OUT2+
6 VCC
7 OUT1–
8 GND
9 OUT1+
10 SVR
11 IN1
12 IN2
13 S-GND
14 IN4
15 IN3
16 AC-GND
17 OUT3+
18 GND
19 OUT3–
20 VCC
21 OUT4+
22 MUTE
23 OUT4–
24 GND
25 N.C.

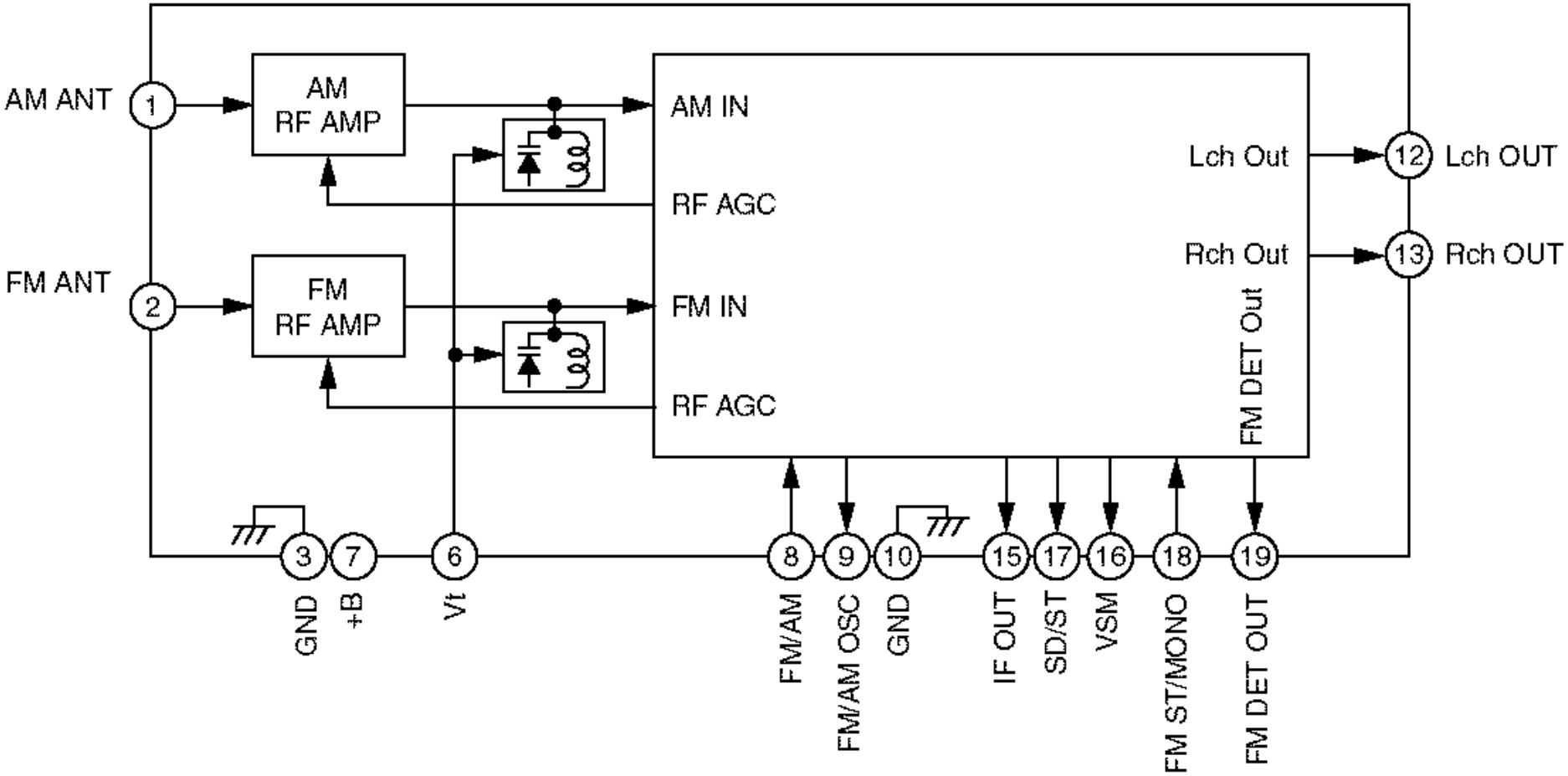
AM ANT
1
AM
RF AMP
FM ANT
2
FM
RF AMP
AM IN
RF AGC
FM IN
RF AGC
Lch Out
Rch Out
FM DET Out
12
Lch OUT
13
Rch OUT
3
7
6
8
9
10
15
17
16
18
19
GND
+B
Vt
FM/AM
FM/AM OSC
GND
IF OUT
SD/ST
VSM
FM ST/MONO
FM DET OUT

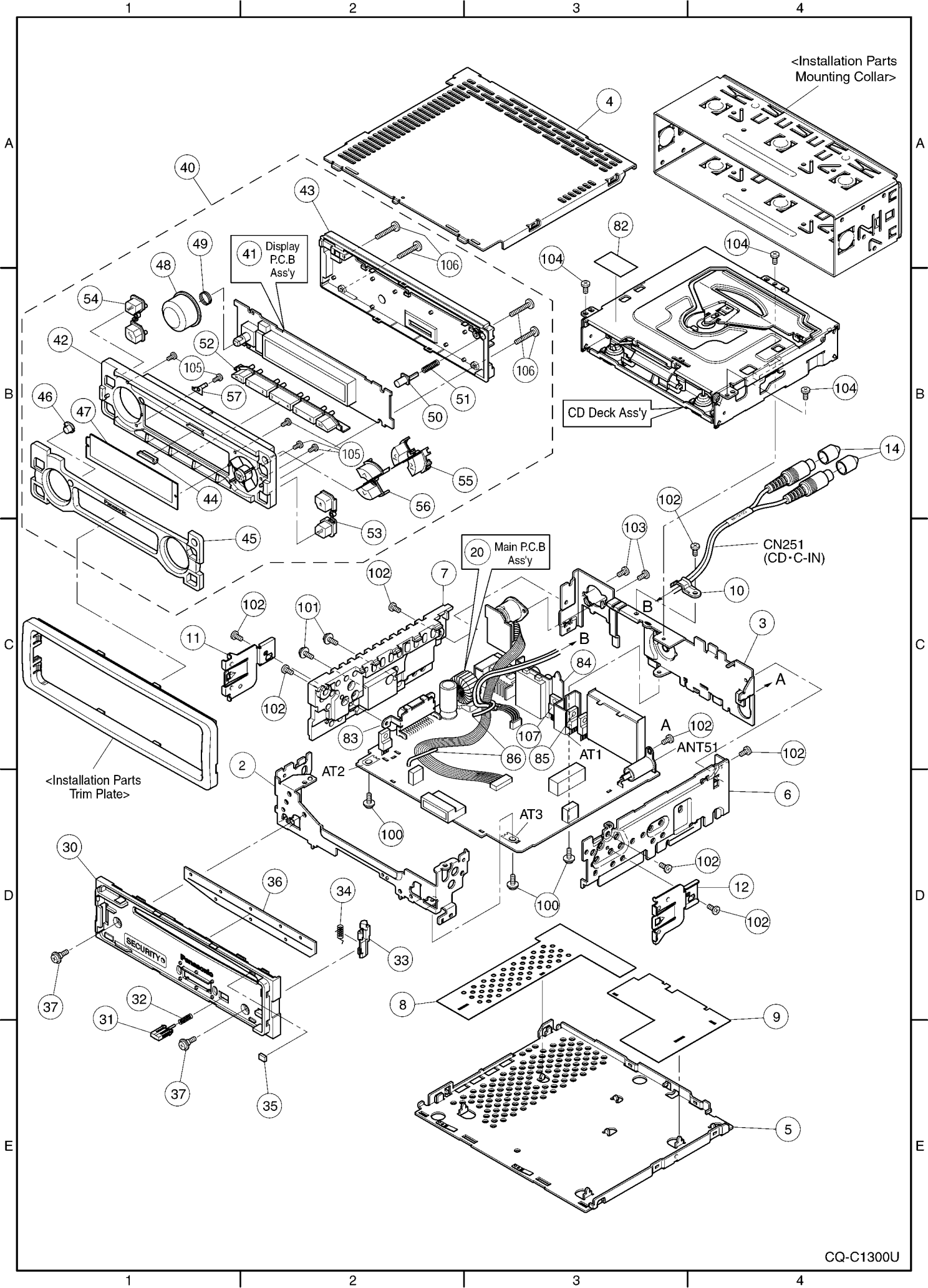
<Installation Parts Mounting Collar>
41 Display P.C.B Ass'y
CD Deck Ass'y
20 Main P.C.B Ass'y
CN251 (CD･C-IN)
ANT51
AT1
AT2
AT3
<Installation Parts Trim Plate>
CQ-C1300U

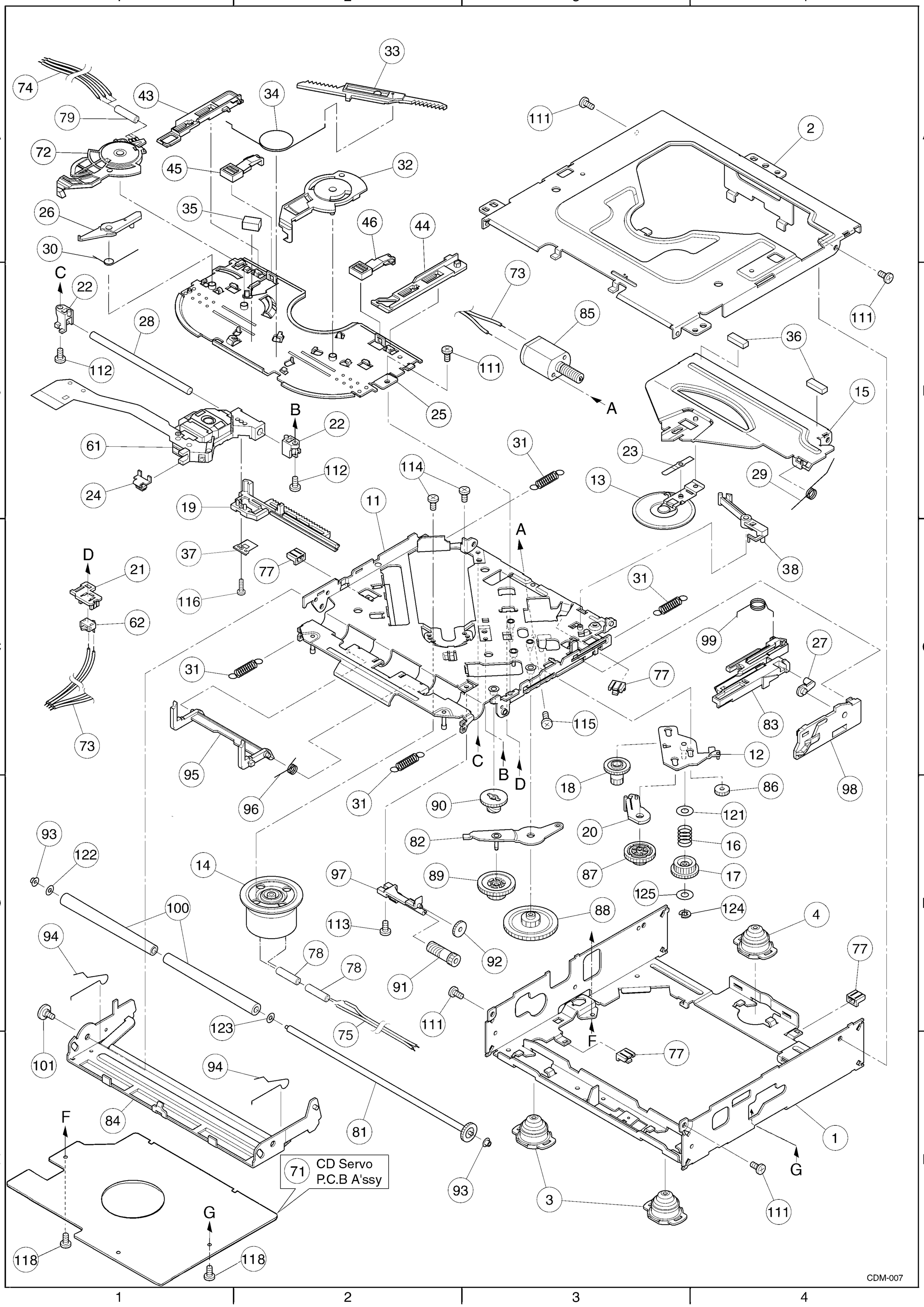
CD Servo
P.C.B A'ssy
CDM-007

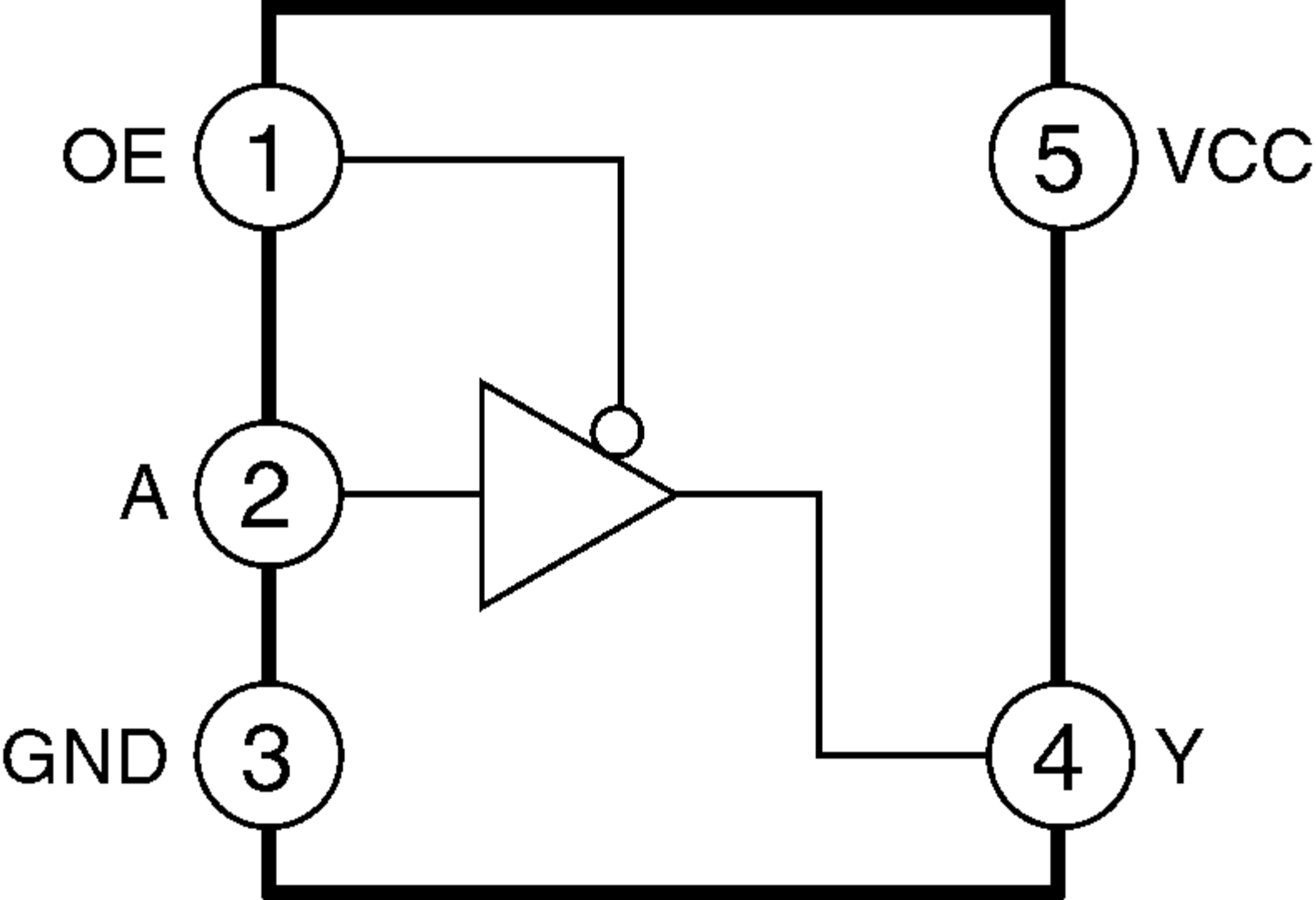
OE
1
A
2
GND
3
5
VCC
4
Y

CAUTION:

This product utilizes a laser diode with the unit turned "on", laser radiation is emitted from the pickup lens.

Laser radiation from the pickup lens is safety level, but be sure the followings:

1. Do not disassemble the optical pickup unit, since radiation from exposed laser diode is dangerous.
2. Do not adjust the variable resistor on the pickup unit. It was already adjusted.
3. Do not look at the focus lens using optical instruments.
4. Recommend not to look at pickup lens for a long time.

DANGER! Visible and invisible laser radiation when open. Avoid direct exposure to beam.

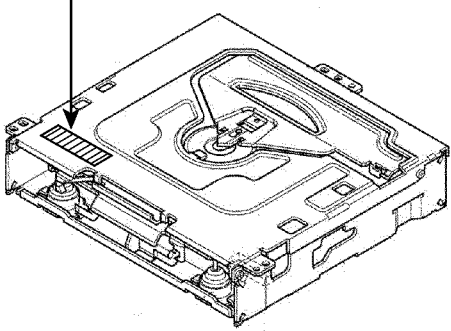

Deck Ass'y (Upper Side)

Caution

This Product utilizes a laser.

Use of controls or adjustments or performance of procedures other than those specified herein may result in hazardous radiation exposure.

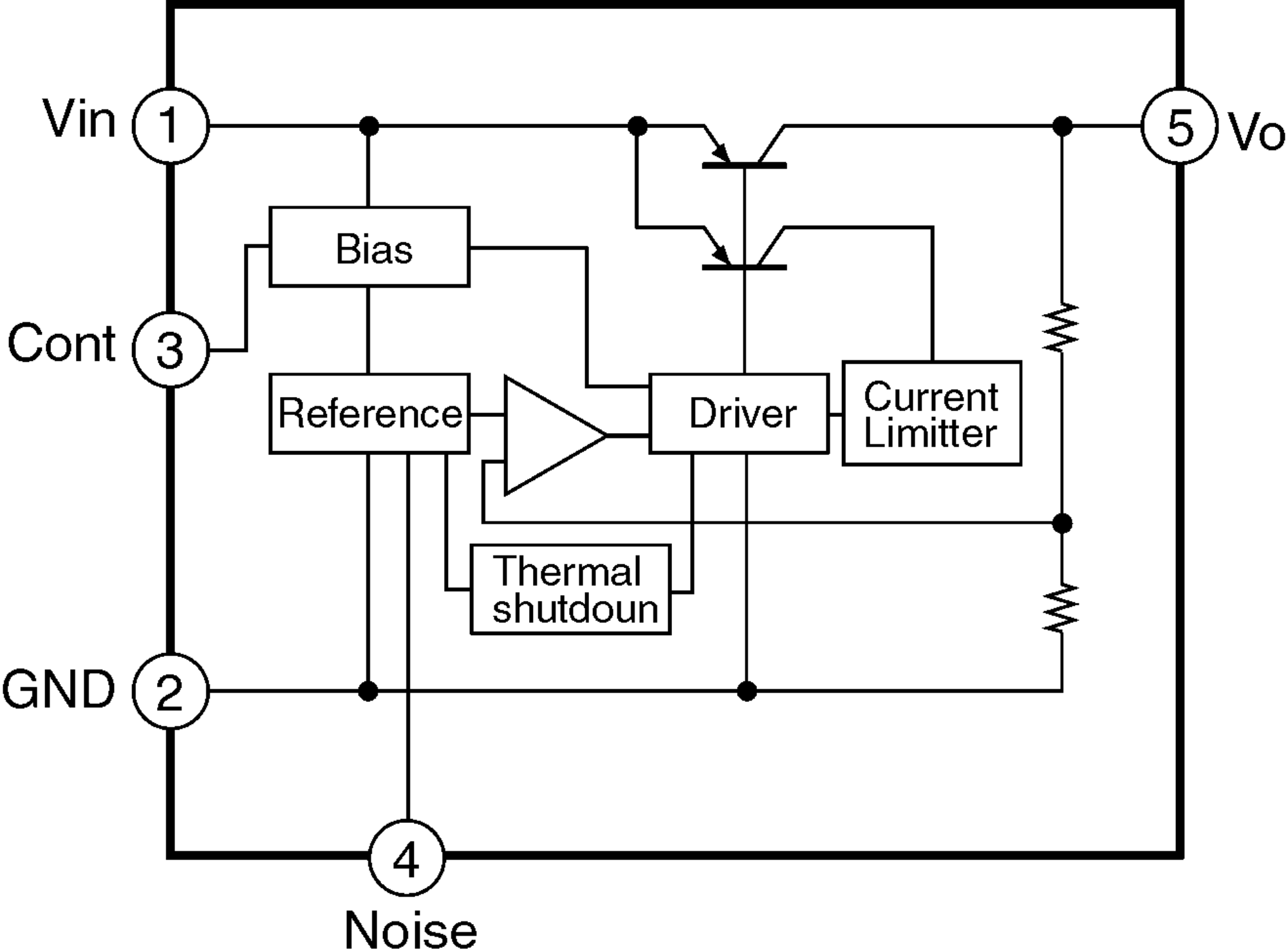
Vin
1
Cont
3
GND
2
4
Noise
5
Vo
Bias
Reference
Driver
Current
Limitter
Thermal
shutdoun

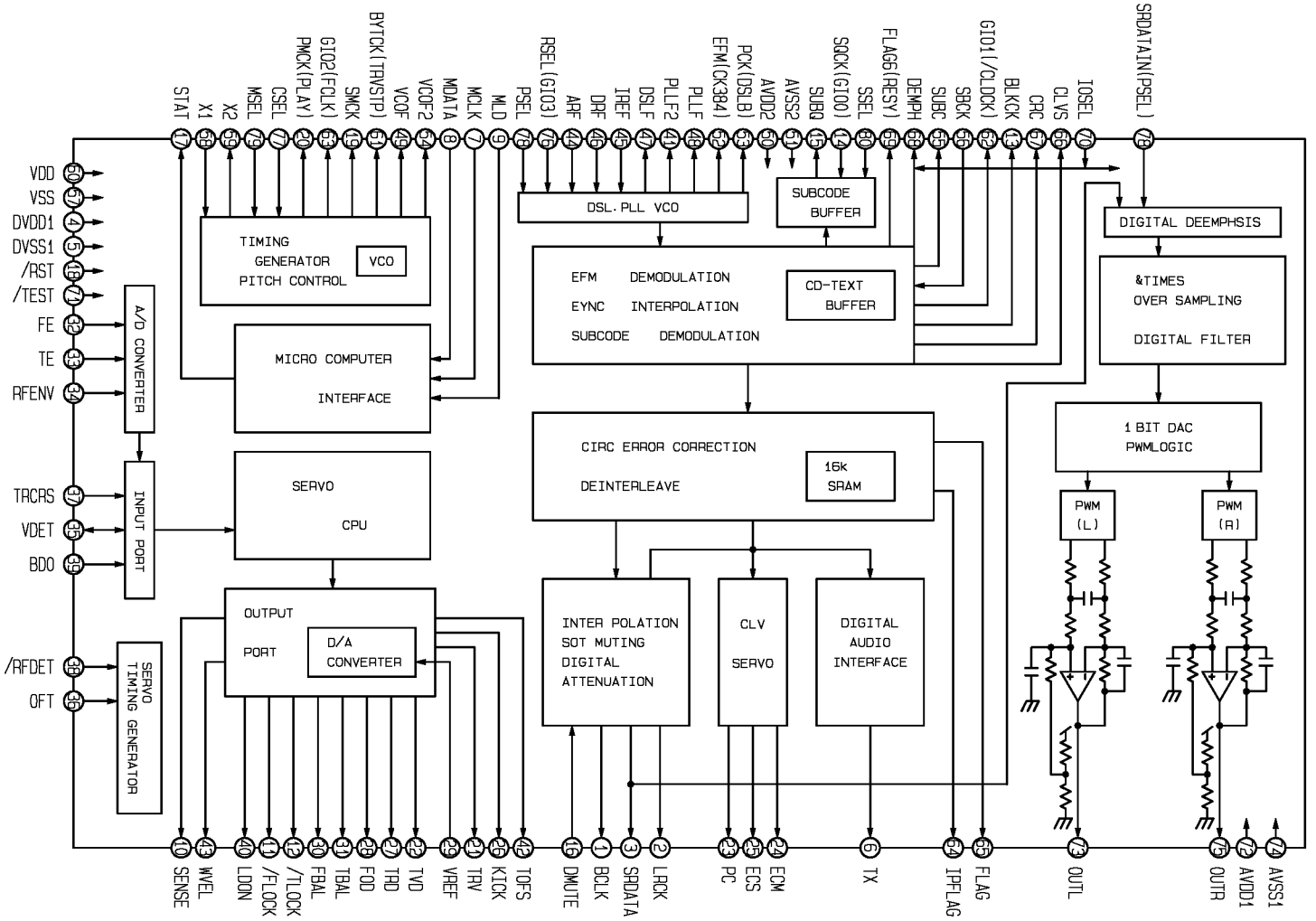
STAT 77
X1 28
X2 29
MSEL 78
CSEL 77
PMCK(PLAY) 20
GIO2(FCLK) 21
SMCK 19
BYTCK(TRVSTP) 31
VCOF 45
VCOF2 44
MDATA 8
MCLK 7
MLD 9
PSEL 78
RSEL(GIO3) 76
ARF 14
DRF 46
IREF 45
DSLF 47
PLLF2 41
PLLF 48
EFM(CK384) 42
PCK(DSLB) 43
AVDD2 30
AVSS2 31
SUBQ 15
SQCK(GIO0) 17
SSEL 80
FLAG6(RESY) 59
DEMPH 58
SUBC 55
SBCK 56
BLKCK 13
CRC 57
CLVS 58
IOSEL 10
SRDATAIN(PSEL) 78
VDD 30
VSS 31
DVDD1 4
DVSS1 5
/RST 16
/TEST 17
FE 32
TE 33
RFENV 34
TRCRS 37
VDET 35
BDO 36
/RFDET 38
OFT 39
TIMING GENERATOR PITCH CONTROL
VCO
DSL. PLL VCO
SUBCODE BUFFER
DIGITAL DEEMPHSIS
EFM DEMODULATION
EYNC INTERPOLATION
SUBCODE DEMODULATION
CD-TEXT BUFFER
&TIMES OVER SAMPLING
DIGITAL FILTER
A/D CONVERTER
MICRO COMPUTER
INTERFACE
CIRC ERROR CORRECTION
DEINTERLEAVE
16k SRAM
1 BIT DAC PWMLOGIC
PWM (L)
PWM (R)
INPUT PORT
SERVO
CPU
OUTPUT PORT
D/A CONVERTER
INTER POLATION SOT MUTING DIGITAL ATTENUATION
CLV SERVO
DIGITAL AUDIO INTERFACE
SERVO TIMING GENERATOR
SENSE 10
WVEL 13
LDON 40
/FLOCK 11
/TLOCK 12
FBAL 30
TBAL 31
FOD 28
TRD 27
TVD 22
VREF 26
TRV 23
KICK 25
TOFS 42
DMUTE 16
BCLK 1
SRDATA 3
LRCK 2
PC 23
ECS 25
ECM 24
TX 6
IPFLAG 64
FLAG 65
OUTL 73
OUTR 75
AVDD1 72
AVSS1 74

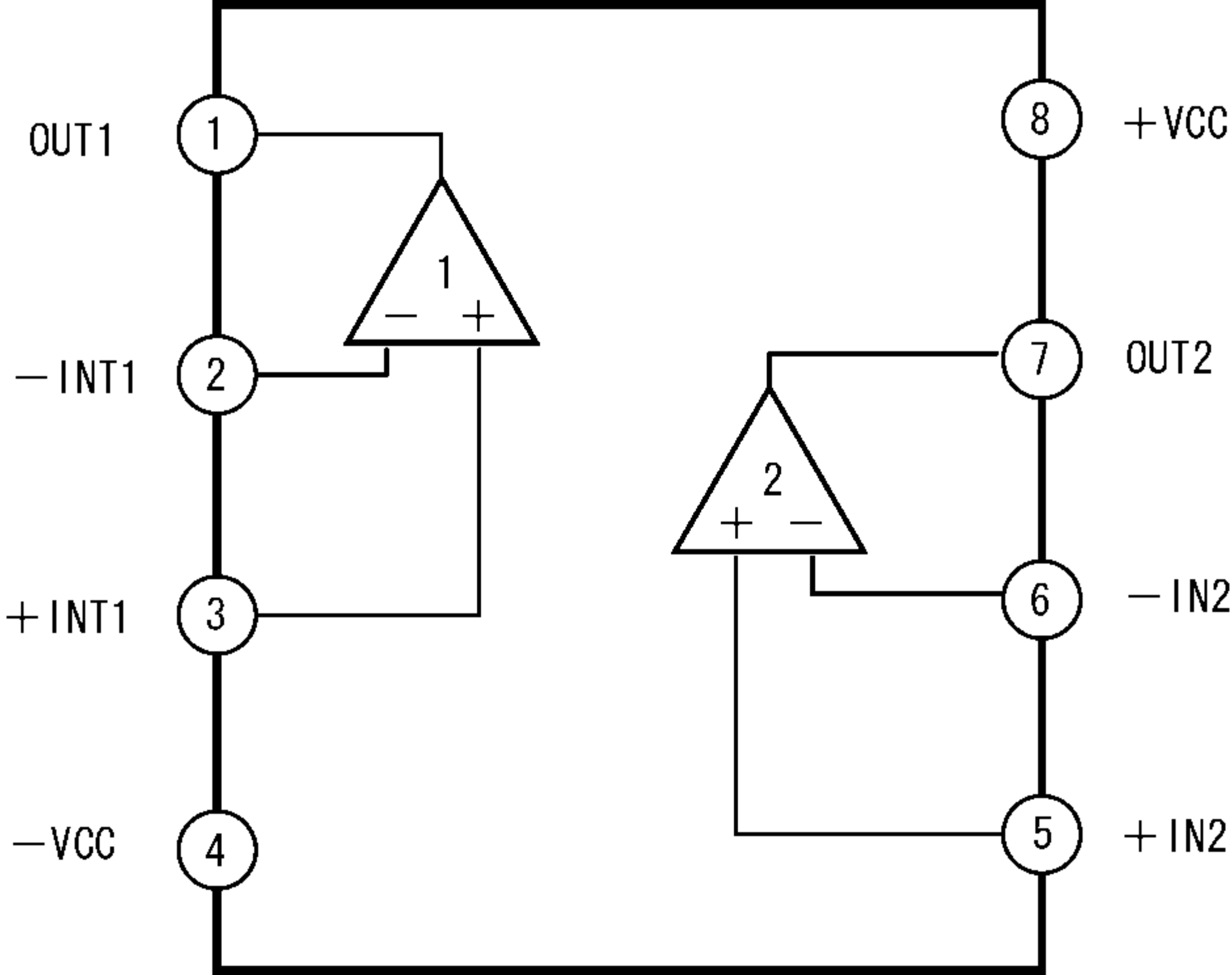
OUT1
1
−INT1
2
+INT1
3
−VCC
4
8
+VCC
7
OUT2
6
−IN2
5
+IN2
1
−
+
2
+
−

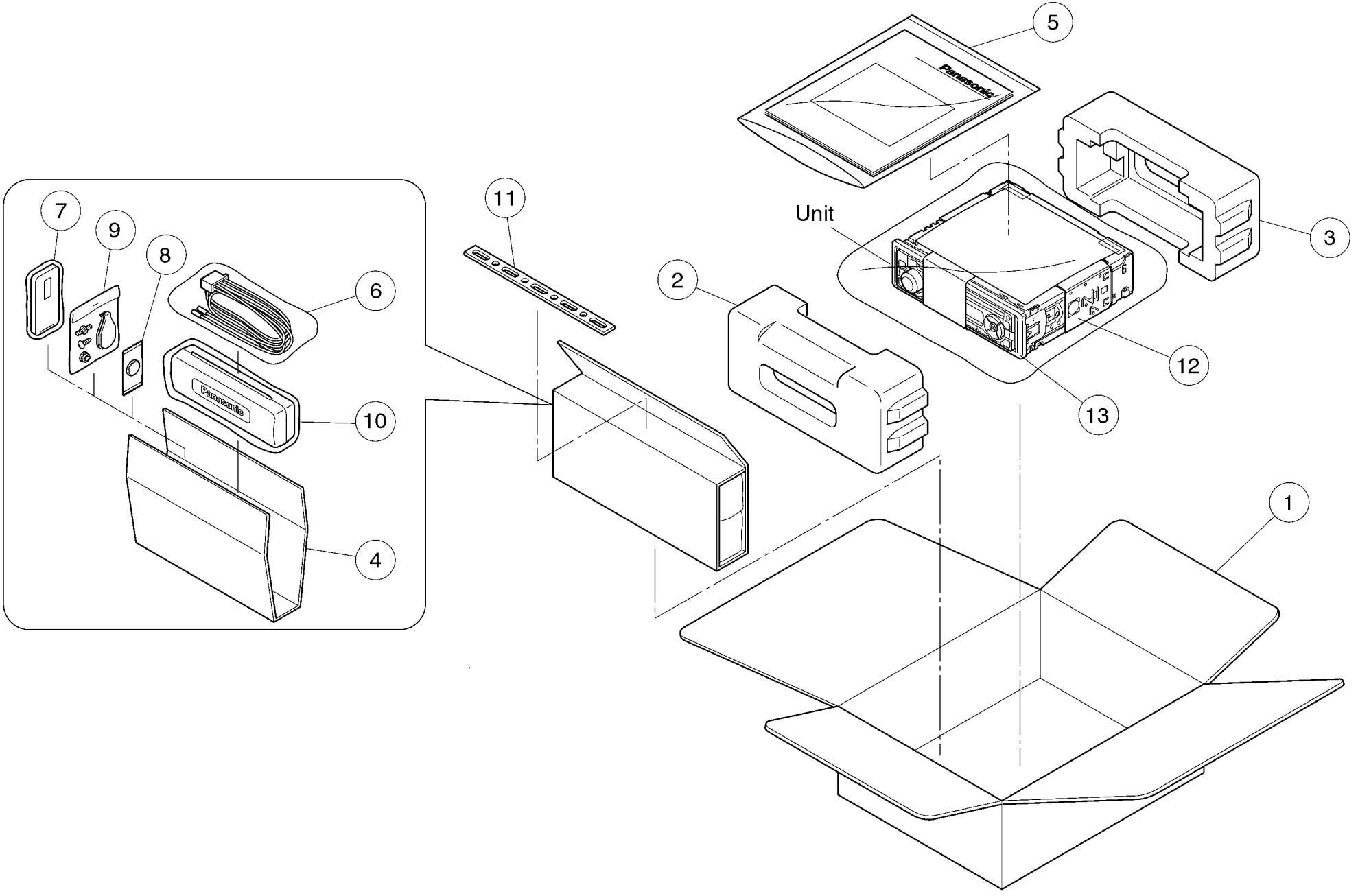
5
Panasonic
3
Unit
12
13
2
11
7
9
8
6
Panasonic
10
4
1

POWER
MENU
SOURCE
SEL
NUMBER
VOL
MUTE
#
1
2
3
RAND
SCAN
REP
4
5
6
7
8
9
BAND
0
DISP
SET
Panasonic
Car Audio

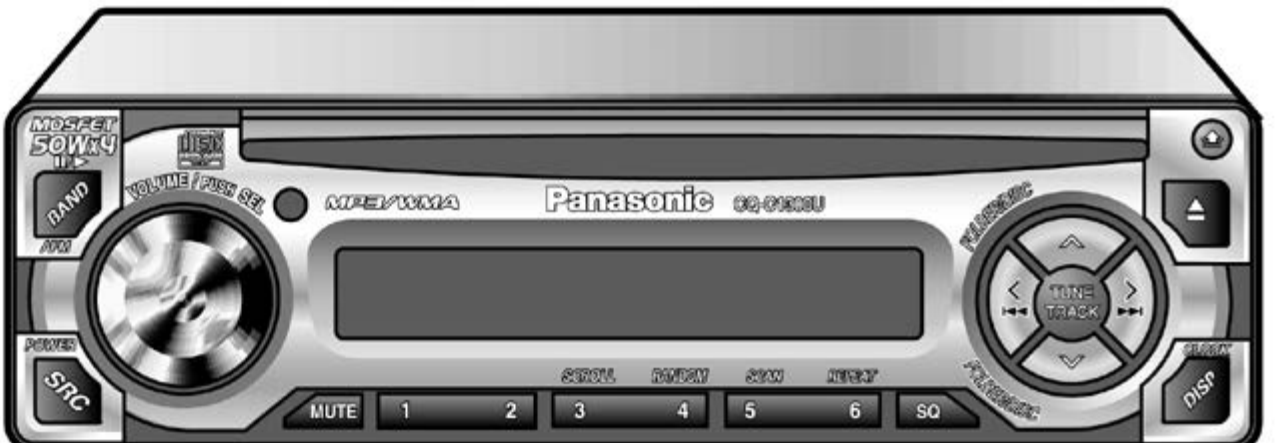
MOSFET
50Wx4
RAND
AM
VOLUME / PUSH SEL
MP3/WMA
Panasonic
CQ-C1303U
TUNE
TRACK
POWER
SRC
SCROLL
SCAN
MUTE
1
2
3
4
5
6
SQ
DISP

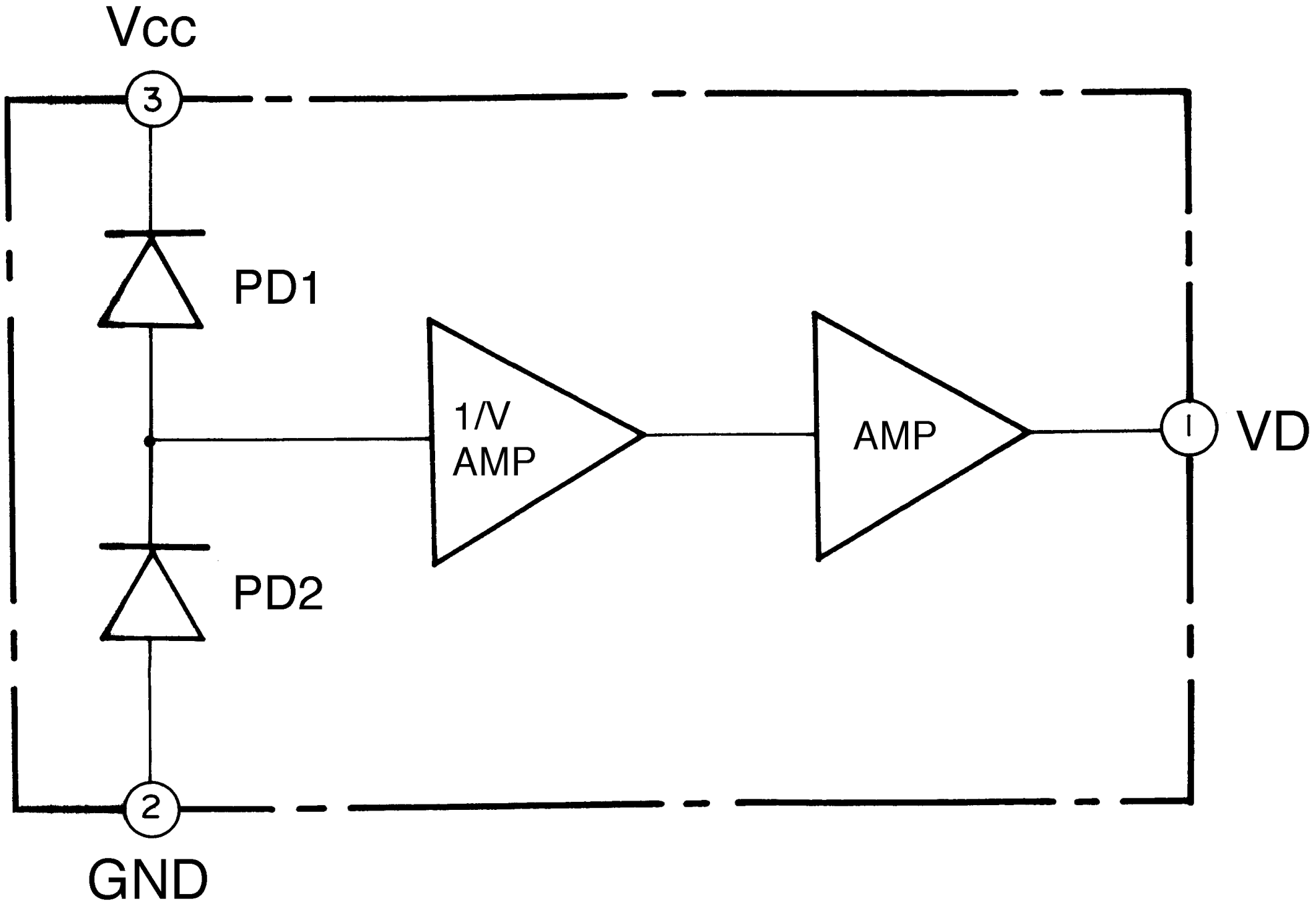
Vcc
3
PD1
1/V
AMP
AMP
1
VD
PD2
2
GND

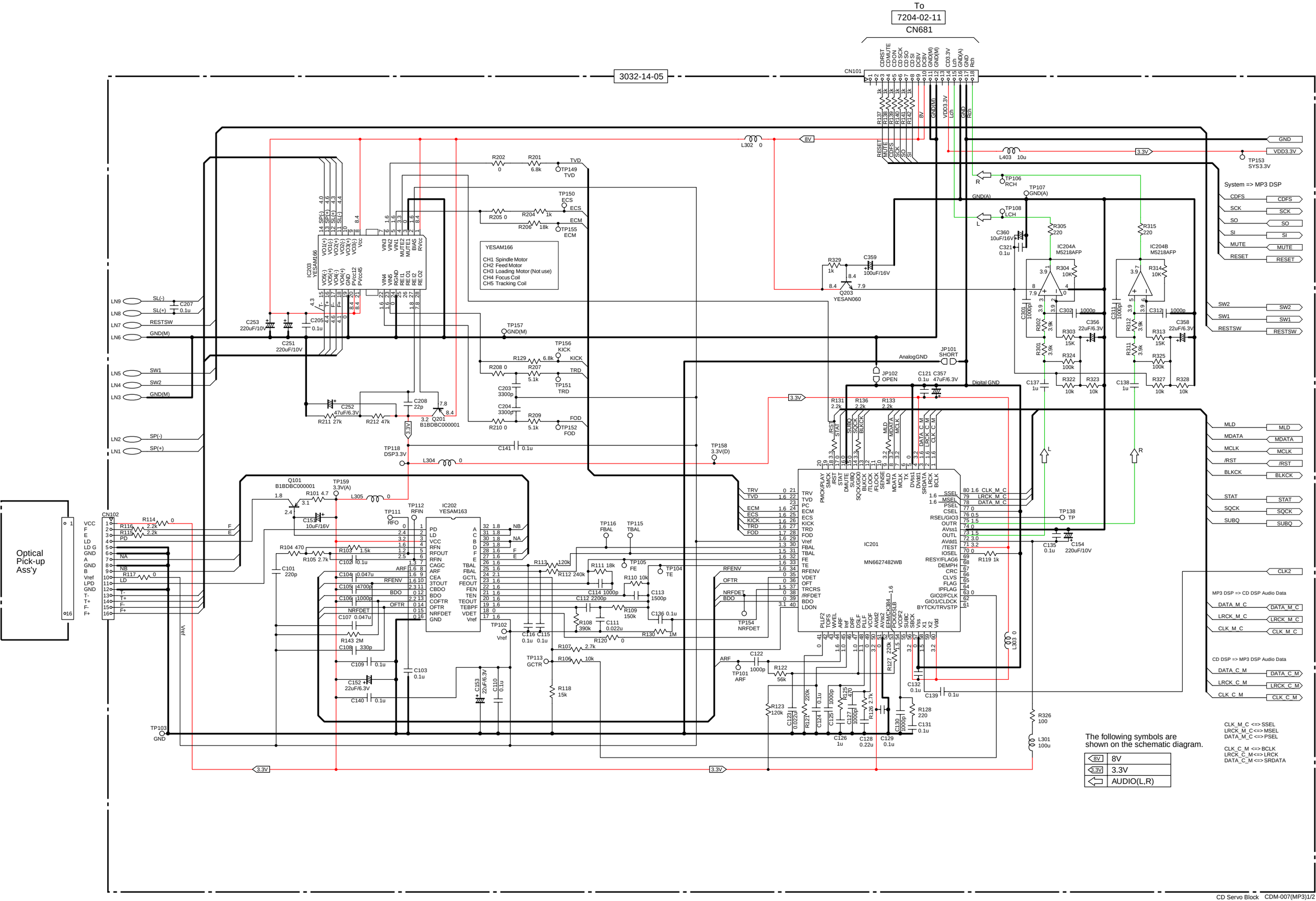
To
7204-02-11
CN681
3032-14-05
CN101
CN102
Optical Pick-up Ass'y
IC203 YESAM166
YESAM166
CH1 Spindle Motor
CH2 Feed Motor
CH3 Loading Motor (Not use)
CH4 Focus Coil
CH5 Tracking Coil
IC202 YESAM163
IC201 MN6627482WB
IC204A M5218AFP
IC204B M5218AFP
System => MP3 DSP
MP3 DSP => CD DSP Audio Data
CD DSP => MP3 DSP Audio Data
CLK_M_C <=> SSEL
LRCK_M_C <=> MSEL
DATA_M_C <=> PSEL
CLK_C_M <=> BCLK
LRCK_C_M <=> LRCK
DATA_C_M <=> SRDATA
The following symbols are shown on the schematic diagram.
8V
3.3V
AUDIO(L,R)

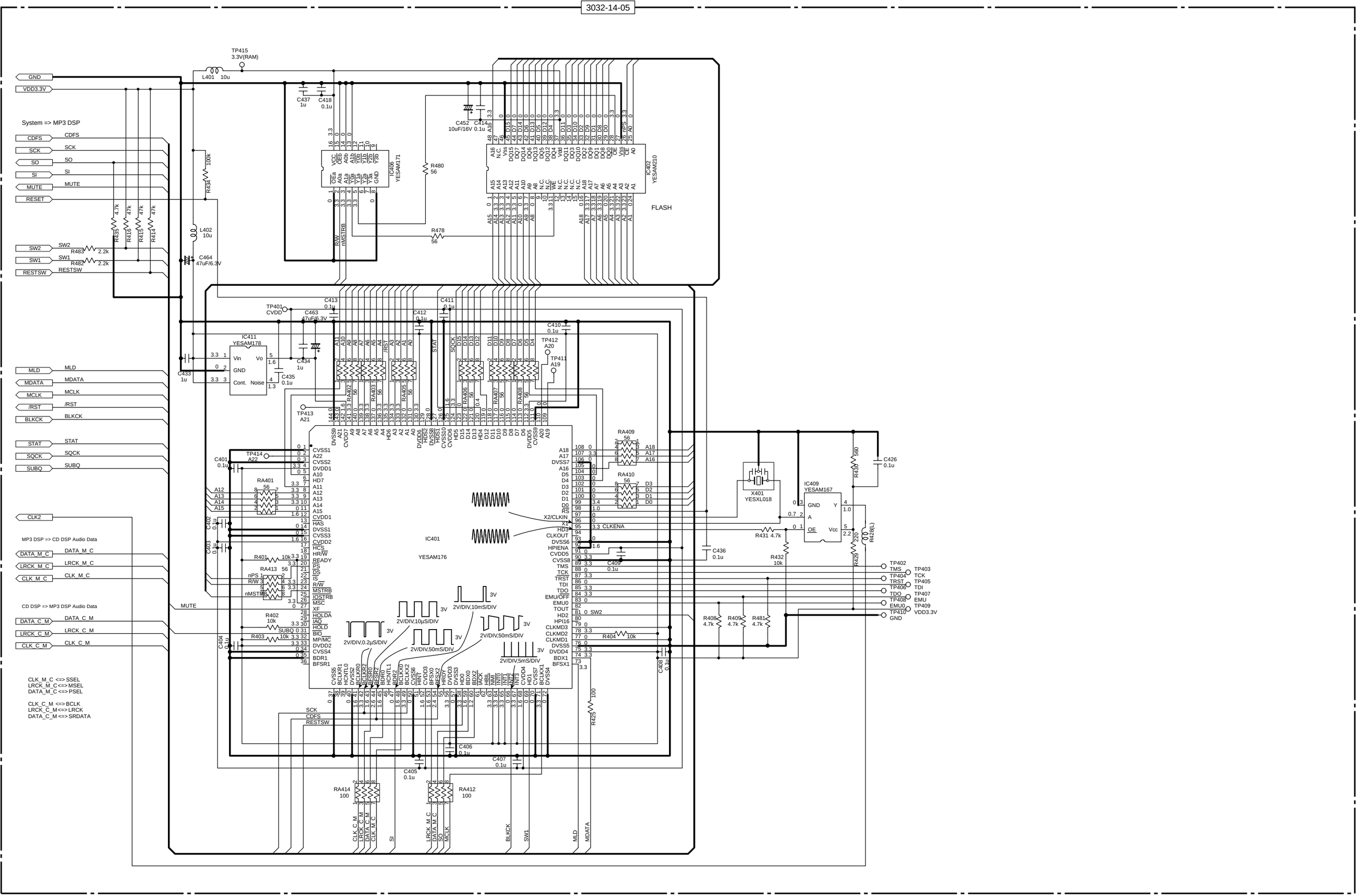
System => MP3 DSP
MP3 DSP => CD DSP Audio Data
CD DSP => MP3 DSP Audio Data
CLK_M_C <=> SSEL
LRCK_M_C <=> MSEL
DATA_M_C <=> PSEL
CLK_C_M <=> BCLK
LRCK_C_M <=> LRCK
DATA_C_M <=> SRDATA
IC401
YESAM176
IC402
YESAM210
FLASH
IC406
YESAM171
IC411
YESAM178
IC409
YESAM167
X401
YESXL018
2V/DIV,10μS/DIV
2V/DIV,0.2μS/DIV
2V/DIV,50mS/DIV
2V/DIV,10mS/DIV
2V/DIV,5mS/DIV

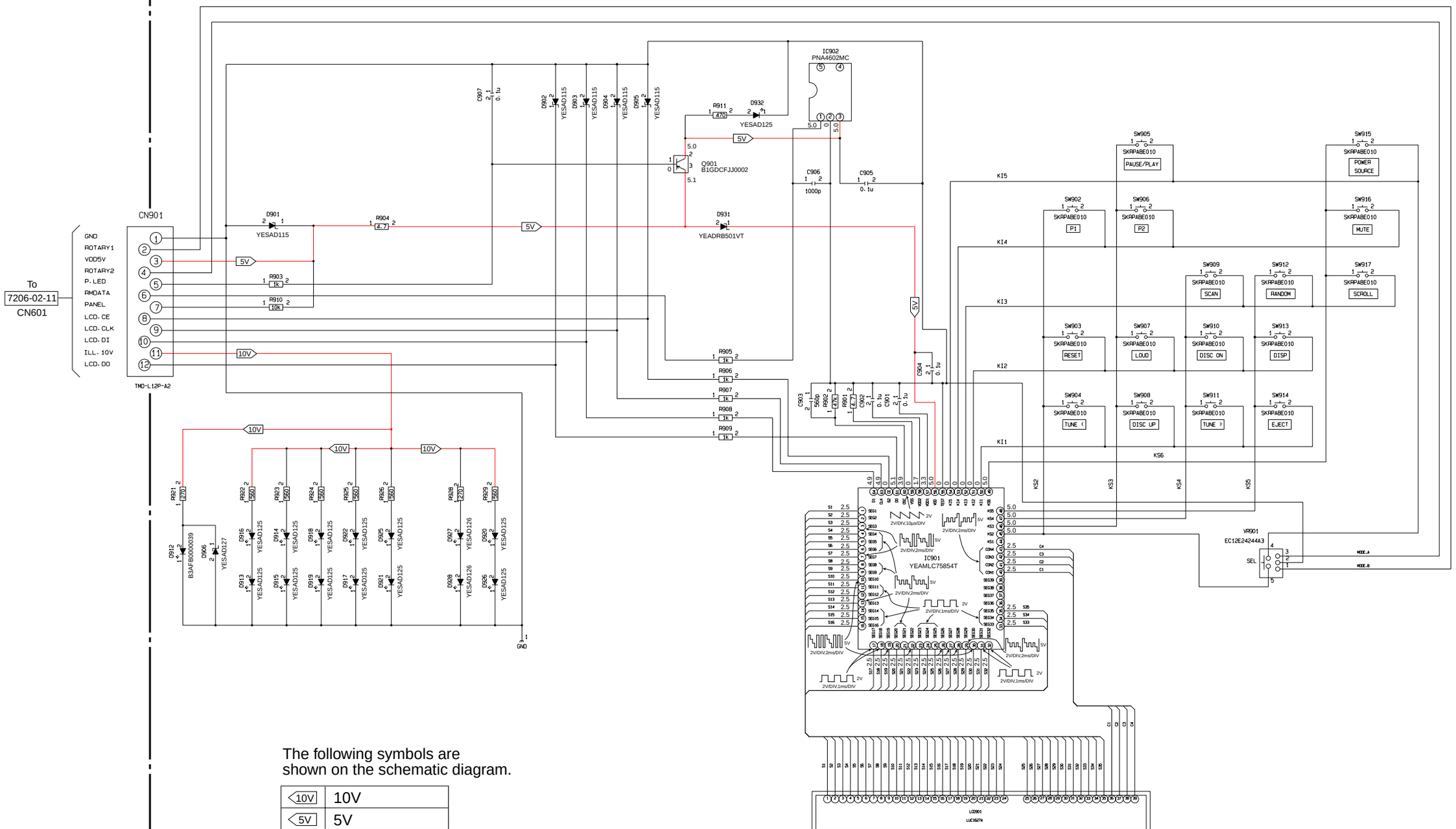

The following symbols are shown on the schematic diagram.

10V	10V
5V	5V

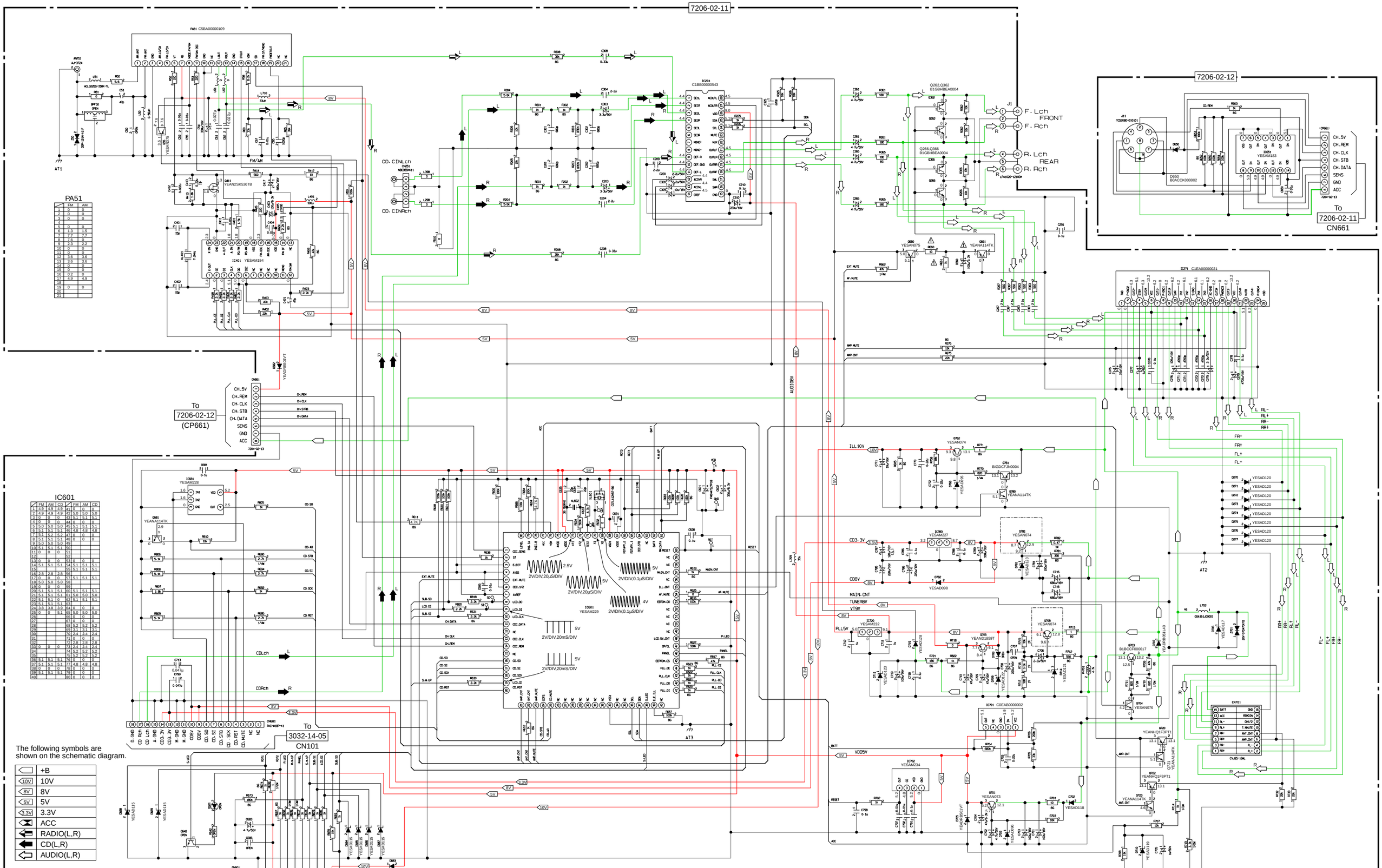
7206-02-11
7206-02-12
PA51 C5BA00000109
IC201 C1BB00000543
IC401 YESAM194
IC601 YESAM229
IC681 YESAM228
IC701 C0EAB00000002
IC702 YESAM234
IC703 YESAM227
IC706 YESAM232
IC761 YESAM074
IC763 YESAM227
IC780 YEANA114TK
IC781 YESAN074
IC782 YESAN074
IC783 YESAM227
IC791 YESAN074
IC792 YESAN074
IC793 YESAN074
IC795 YESAN074
IC796 YESAN074
IC797 YEANA114TK
IC798 YESAN074
IC799 YEANA114TK
IC800 YESAN074
IC801 YEANA114TK
Q262,Q362 B1GBHBEA0004
Q266,Q366 B1GBHBEA0004
Q411 YEAN25K536TB
Q660 YESAN075
Q661 YEANA114TK
Q701 YESAN073
Q702 YEANHQ1F3PT1
Q703 B18CCF000017
Q704 YESAN076
Q705 YEAND1859T
Q706 YESAN074
Q708 YESAN074
Q761 B1GDCFJN0004
Q762 YESAN074
Q763 YESAN074
Q764 YEANA114TK
Q781 YESAN074
Q782 YESAD098
Q791 YESAN074
Q792 YESAN074
Q793 YESAN074
Q795 YESAN074
Q796 YESAN074
Q797 YEANA114TK
Q798 YESAN074
Q799 YEANA114TK
Q800 YESAN074
Q801 YEANA114TK
D650 B0ACCK000002
D651 YESAM183
D661 YEANA114TK
D662 YEANA114TK
D663 YEANHR01LG3
D664 YESAD115
D665 YESAD115
D666 YESAD115
D667 YESAD115
D668 YESAD115
D669 YESAD115
D670 YESAD120
D671 YESAD120
D672 YESAD120
D673 YESAD120
D674 YESAD120
D675 YESAD120
D676 YESAD120
D677 YESAD120
D681 YESAD115
D682 YESAD115
D683 YESAD120
D684 YESAD115
D685 YESAD115
D686 YESAD115
D687 YESAD115
D688 YESAD115
D689 YESAD115
D690 YESAD115
D691 YESAD115
D692 YESAD115
D693 YESAD115
D694 YESAD115
D695 YESAD115
D696 YESAD115
D697 YESAD115
D698 YESAD115
D699 YESAD115
D700 YESAD115
D701 YESAD115
D702 YESAD118
D703 YESAD119
D704 YESAD119
D705 YESAD119
D706 YESAD119
D707 YESAD119
D708 YESAD119
D709 YESAD119
D710 YESAD119
D711 YESAD119
D712 YESAD119
D713 YESAD119
D714 YESAD119
D715 YESAD119
D716 YESAD119
D717 YESAD119
D718 YESAD119
D719 YESAD119
D720 YESAD119
D721 YESAD119
D722 YESAD119
D723 YESAD119
D724 YESAD119
D725 YESAD119
D726 YESAD119
D727 YESAD119
D728 YESAD119
D729 YESAD119
D730 YESAD119
D731 YESAD119
D732 YESAD119
D733 YESAD119
D734 YESAD119
D735 YESAD119
D736 YESAD119
D737 YESAD119
D738 YESAD119
D739 YESAD119
D740 YESAD119
D741 YESAD119
D742 YESAD119
D743 YESAD119
D744 YESAD119
D745 YESAD119
D746 YESAD119
D747 YESAD119
D748 YESAD119
D749 YESAD119
D750 YESAD119
D751 YESAD119
D752 YESAD119
D753 YESAD119
D754 YESAD119
D755 YESAD119
D756 YESAD119
D757 YESAD119
D758 YESAD119
D759 YESAD119
D760 YESAD119
D761 YESAD119
D762 YESAD119
D763 YESAD119
D764 YESAD119
D765 YESAD119
D766 YESAD119
D767 YESAD119
D768 YESAD119
D769 YESAD119
D770 YESAD119
D771 YESAD119
D772 YESAD119
D773 YESAD119
D774 YESAD119
D775 YESAD119
D776 YESAD119
D777 YESAD119
D778 YESAD119
D779 YESAD119
D780 YESAD119
D781 YESAD119
D782 YESAD119
D783 YESAD119
D784 YESAD119
D785 YESAD119
D786 YESAD119
D787 YESAD119
D788 YESAD119
D789 YESAD119
D790 YESAD119
D791 YESAD119
D792 YESAD119
D793 YESAD119
D794 YESAD119
D795 YESAD119
D796 YESAD119
D797 YESAD119
D798 YESAD119
D799 YESAD119
D800 YESAD119
D801 YESAD119
D802 YESAD119
D803 YESAD119
D804 YESAD119
D805 YESAD119
D806 YESAD119
D807 YESAD119
D808 YESAD119
D809 YESAD119
D810 YESAD119
D811 YESAD119
D812 YESAD119
D813 YESAD119
D814 YESAD119
D815 YESAD119
D816 YESAD119
D817 YESAD119
D818 YESAD119
D819 YESAD119
D820 YESAD119
D821 YESAD119
D822 YESAD119
D823 YESAD119
D824 YESAD119
D825 YESAD119
D826 YESAD119
D827 YESAD119
D828 YESAD119
D829 YESAD119
D830 YESAD119
D831 YESAD119
D832 YESAD119
D833 YESAD119
D834 YESAD119
D835 YESAD119
D836 YESAD119
D837 YESAD119
D838 YESAD119
D839 YESAD119
D840 YESAD119
D841 YESAD119
D842 YESAD119
D843 YESAD119
D844 YESAD119
D845 YESAD119
D846 YESAD119
D847 YESAD119
D848 YESAD119
D849 YESAD119
D850 YESAD119
D851 YESAD119
D852 YESAD119
D853 YESAD119
D854 YESAD119
D855 YESAD119
D856 YESAD119
D857 YESAD119
D858 YESAD119
D859 YESAD119
D860 YESAD119
D861 YESAD119
D862 YESAD119
D863 YESAD119
D864 YESAD119
D865 YESAD119
D866 YESAD119
D867 YESAD119
D868 YESAD119
D869 YESAD119
D870 YESAD119
D871 YESAD119
D872 YESAD119
D873 YESAD119
D874 YESAD119
D875 YESAD119
D876 YESAD119
D877 YESAD119
D878 YESAD119
D879 YESAD119
D880 YESAD119
D881 YESAD119
D882 YESAD119
D883 YESAD119
D884 YESAD119
D885 YESAD119
D886 YESAD119
D887 YESAD119
D888 YESAD119
D889 YESAD119
D890 YESAD119
D891 YESAD119
D892 YESAD119
D893 YESAD119
D894 YESAD119
D895 YESAD119
D896 YESAD119
D897 YESAD119
D898 YESAD119
D899 YESAD119
D900 YESAD119
D901 YESAD119
D902 YESAD119
D903 YESAD119
D904 YESAD119
D905 YESAD119
D906 YESAD119
D907 YESAD119
D908 YESAD119
D909 YESAD119
D910 YESAD119
D911 YESAD119
D912 YESAD119
D913 YESAD119
D914 YESAD119
D915 YESAD119
D916 YESAD119
D917 YESAD119
D918 YESAD119
D919 YESAD119
D920 YESAD119
D921 YESAD119
D922 YESAD119
D923 YESAD119
D924 YESAD119
D925 YESAD119
D926 YESAD119
D927 YESAD119
D928 YESAD119
D929 YESAD119
D930 YESAD119
D931 YESAD119
D932 YESAD119
D933 YESAD119
D934 YESAD119
D935 YESAD119
D936 YESAD119
D937 YESAD119
D938 YESAD119
D939 YESAD119
D940 YESAD119
D941 YESAD119
D942 YESAD119
D943 YESAD119
D944 YESAD119
D945 YESAD119
D946 YESAD119
D947 YESAD119
D948 YESAD119
D949 YESAD119
D950 YESAD119
D951 YESAD119
D952 YESAD119
D953 YESAD119
D954 YESAD119
D955 YESAD119
D956 YESAD119
D957 YESAD119
D958 YESAD119
D959 YESAD119
D960 YESAD119
D961 YESAD119
D962 YESAD119
D963 YESAD119
D964 YESAD119
D965 YESAD119
D966 YESAD119
D967 YESAD119
D968 YESAD119
D969 YESAD119
D970 YESAD119
D971 YESAD119
D972 YESAD119
D973 YESAD119
D974 YESAD119
D975 YESAD119
D976 YESAD119
D977 YESAD119
D978 YESAD119
D979 YESAD119
D980 YESAD119
D981 YESAD119
D982 YESAD119
D983 YESAD120
D984 YESAD115
D985 YESAD115
D986 YESAD115
D987 YESAD115
D988 YESAD115
D989 YESAD115
D990 YESAD115
D991 YESAD115
D992 YESAD115
D993 YESAD115
D994 YESAD115
D995 YESAD115
D996 YESAD115
D997 YESAD115
D998 YESAD115
D999 YESAD115
D1000 YESAD115
D1001 YESAD115
D1002 YESAD115
D1003 YESAD115

17.3. CD Servo Block-1

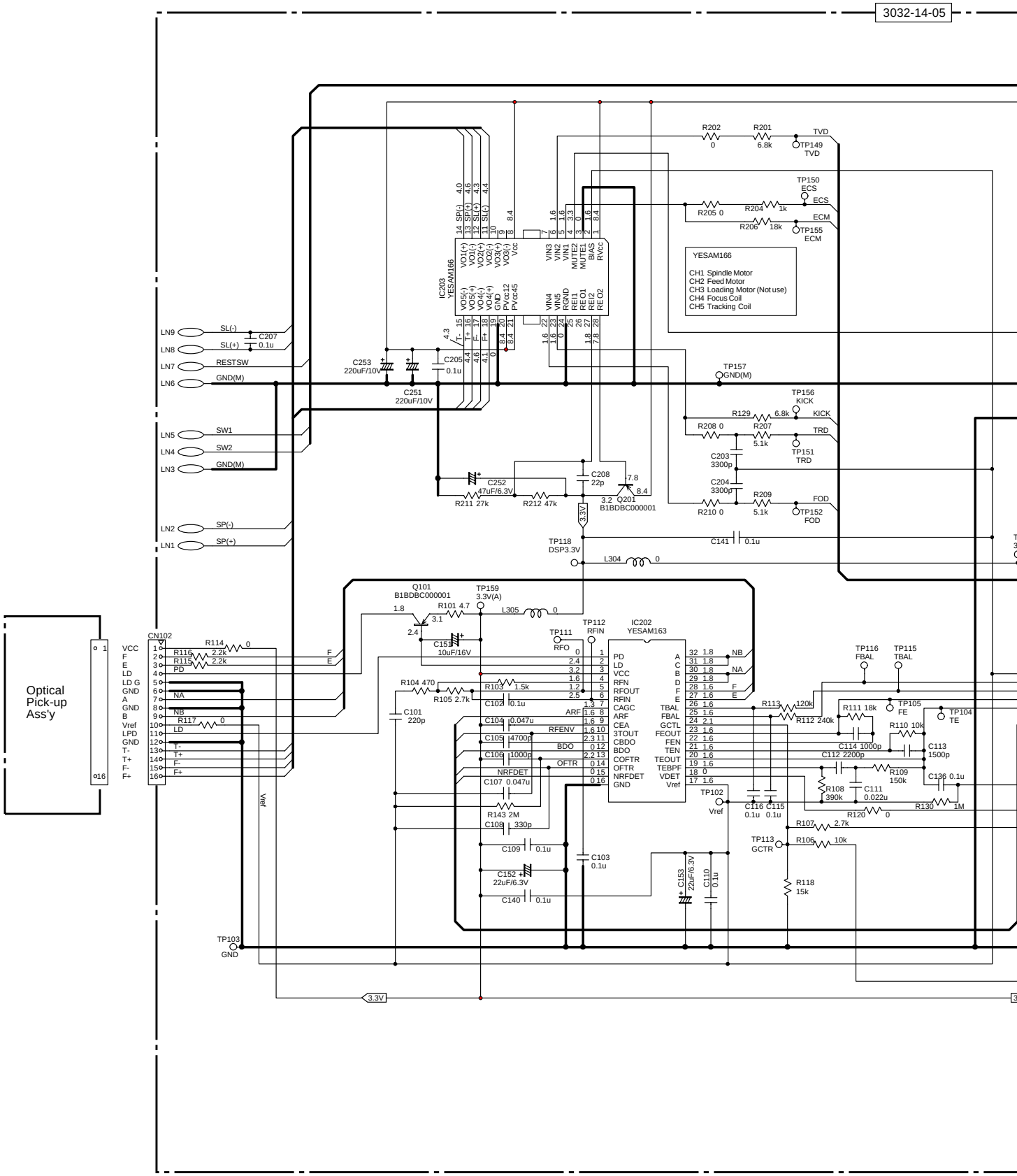

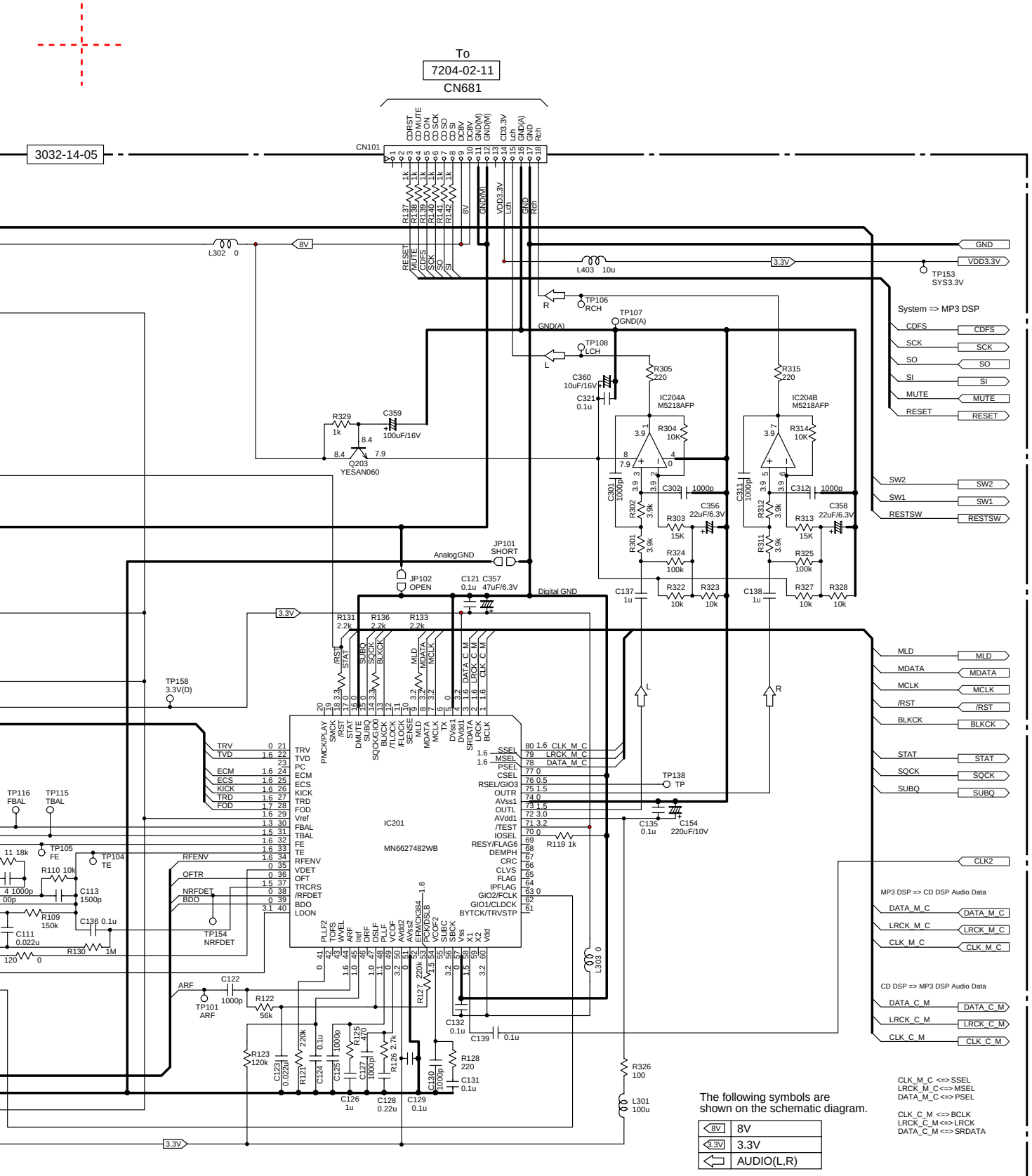

CD Servo Block CDM-007(MP3)1/2

17.4. CD Servo Block-2

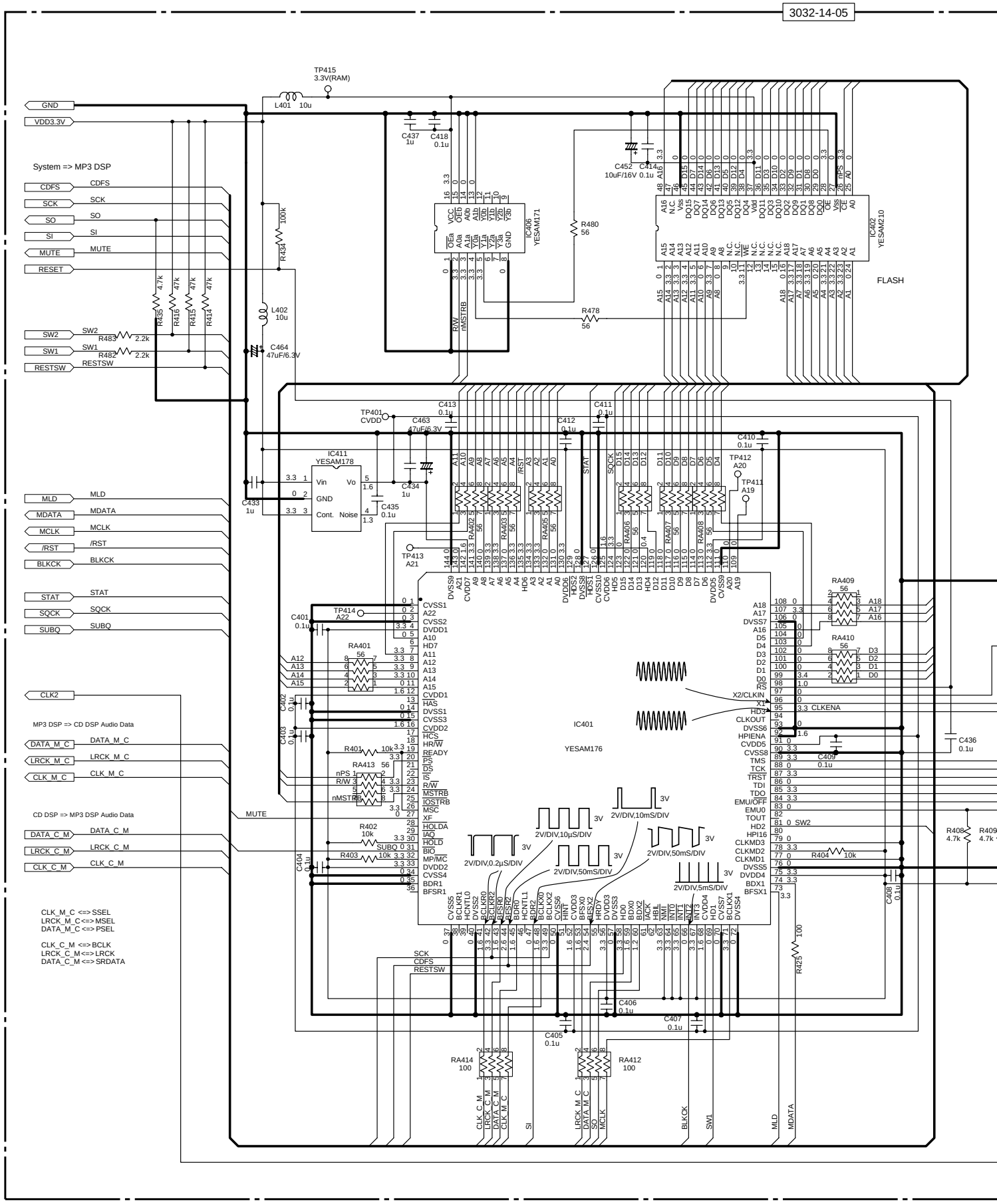

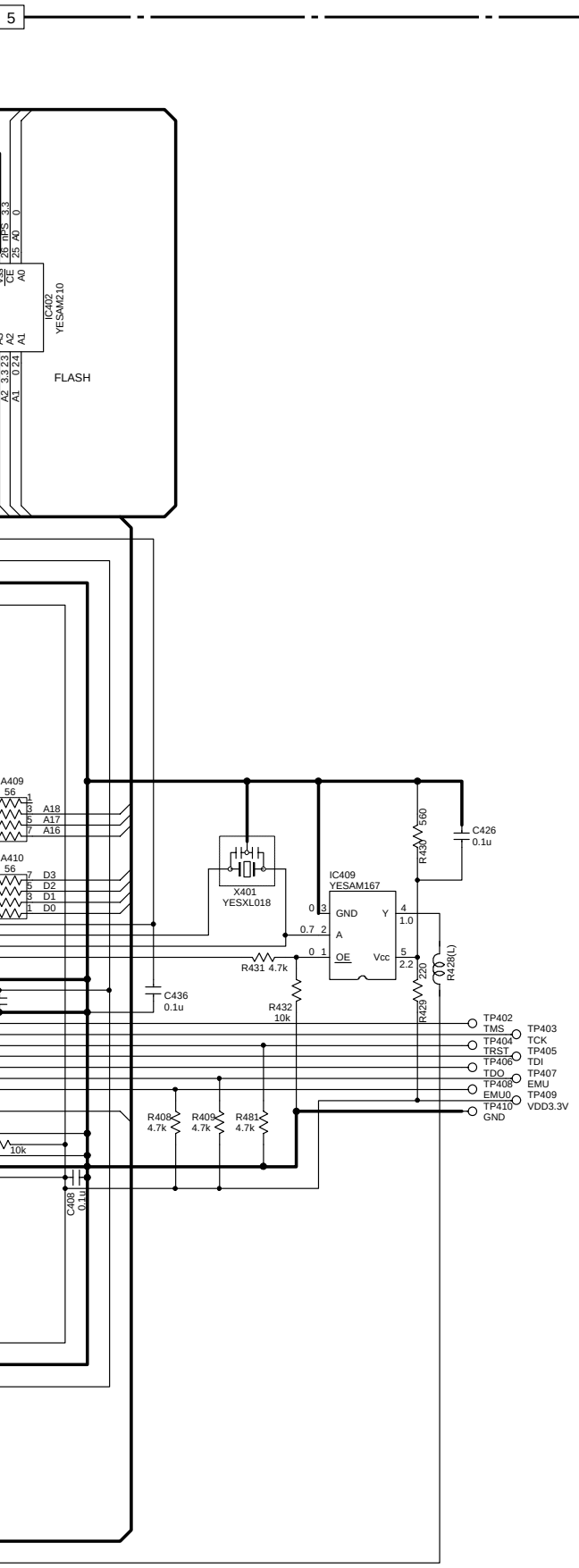

CD Servo Block CDM-007(MP3)2/2

17.2. Display Block

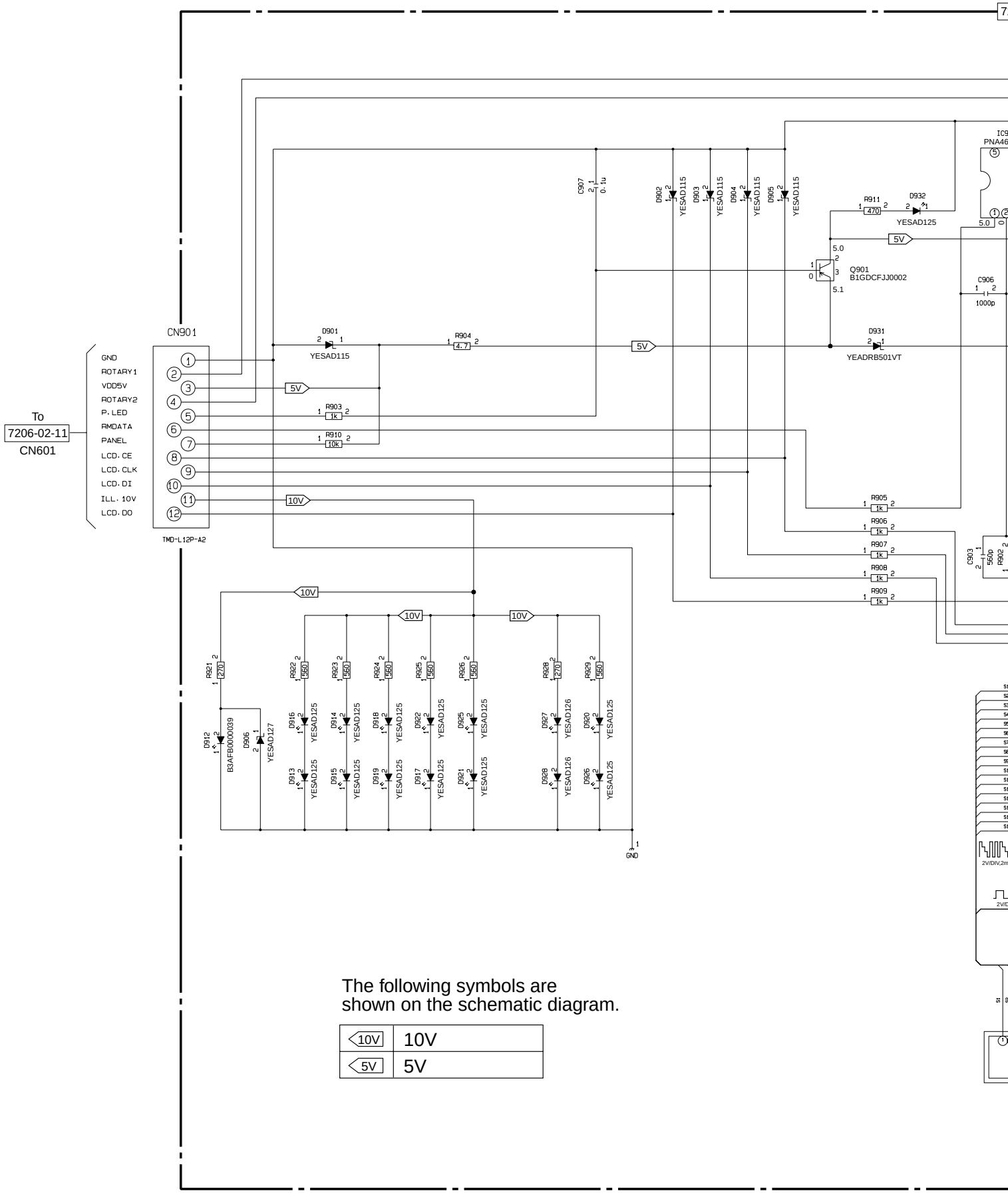

The following symbols are shown on the schematic diagram.

10V	10V
5V	5V

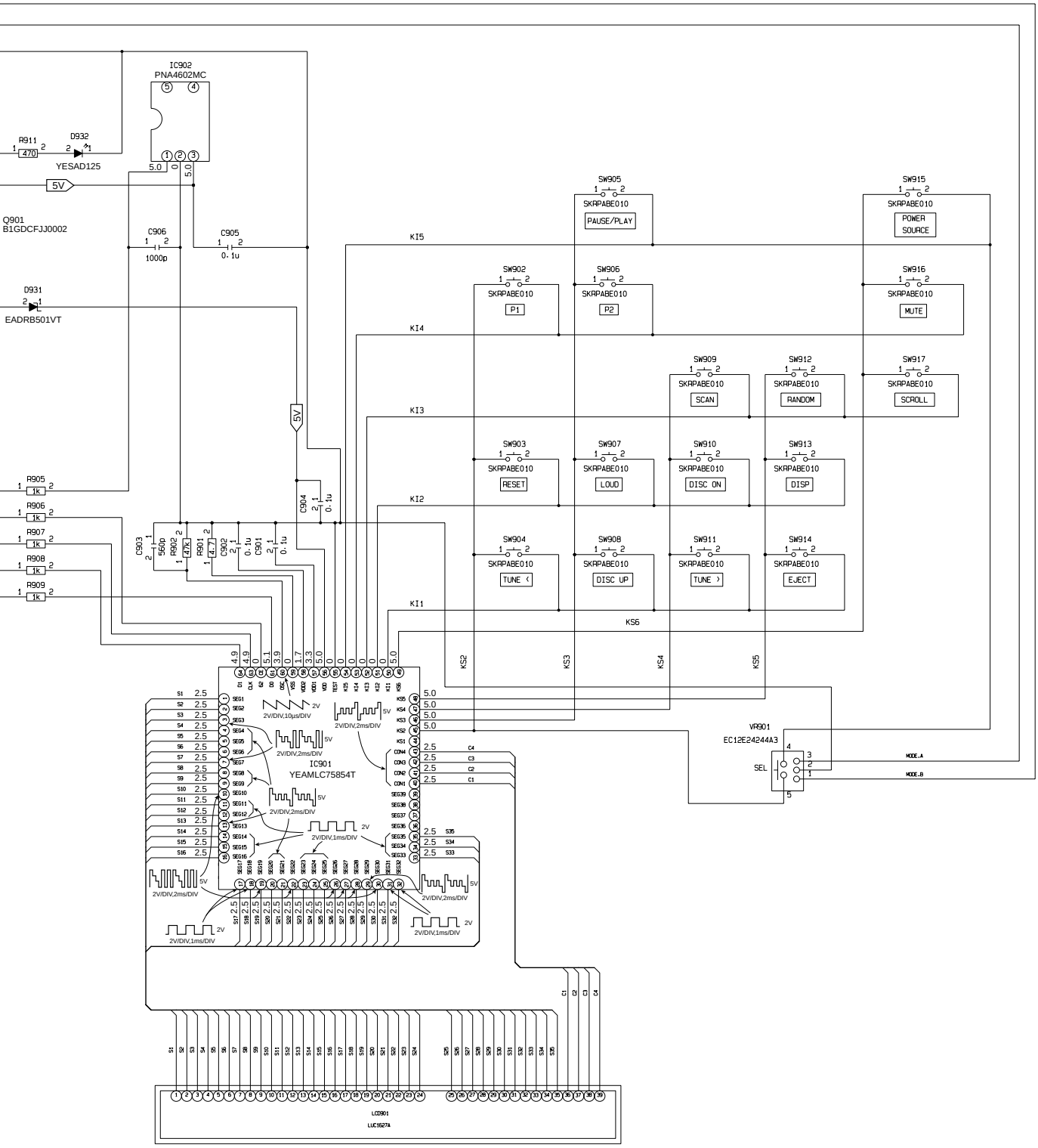
IC902
PNA4602MC
R911
470
D932
YESAD125
5V
Q901
B1GDCFJJ0002
C906
1000p
C905
0.1u
D931
EADRB501VT
R905
1k
R906
1k
R907
1k
R908
1k
R909
1k
C903
560p
R902
47k
R901
4.7
C902
0.1u
C901
0.1u
C904
0.1u
KI5
KI4
KI3
KI2
KI1
KS6
KS2
KS3
KS4
KS5
SW905
SKRPABE010
PAUSE/PLAY
SW915
SKRPABE010
POWER SOURCE
SW902
SKRPABE010
P1
SW906
SKRPABE010
P2
SW916
SKRPABE010
MUTE
SW909
SKRPABE010
SCAN
SW912
SKRPABE010
RANDOM
SW917
SKRPABE010
SCROLL
SW903
SKRPABE010
RESET
SW907
SKRPABE010
LOUD
SW910
SKRPABE010
DISC ON
SW913
SKRPABE010
DISP
SW904
SKRPABE010
TUNE ‹
SW908
SKRPABE010
DISC UP
SW911
SKRPABE010
TUNE ›
SW914
SKRPABE010
EJECT
VR901
EC12E24244A3
SEL
MODE.A
MODE.B
IC901
YEAMLC75854T
2V/DIV,10μs/DIV
2V/DIV,2ms/DIV
2V/DIV,1ms/DIV
LCD901
LUC1627A

17 SCHEMATIC DIAGRAM

17.1. Main Block

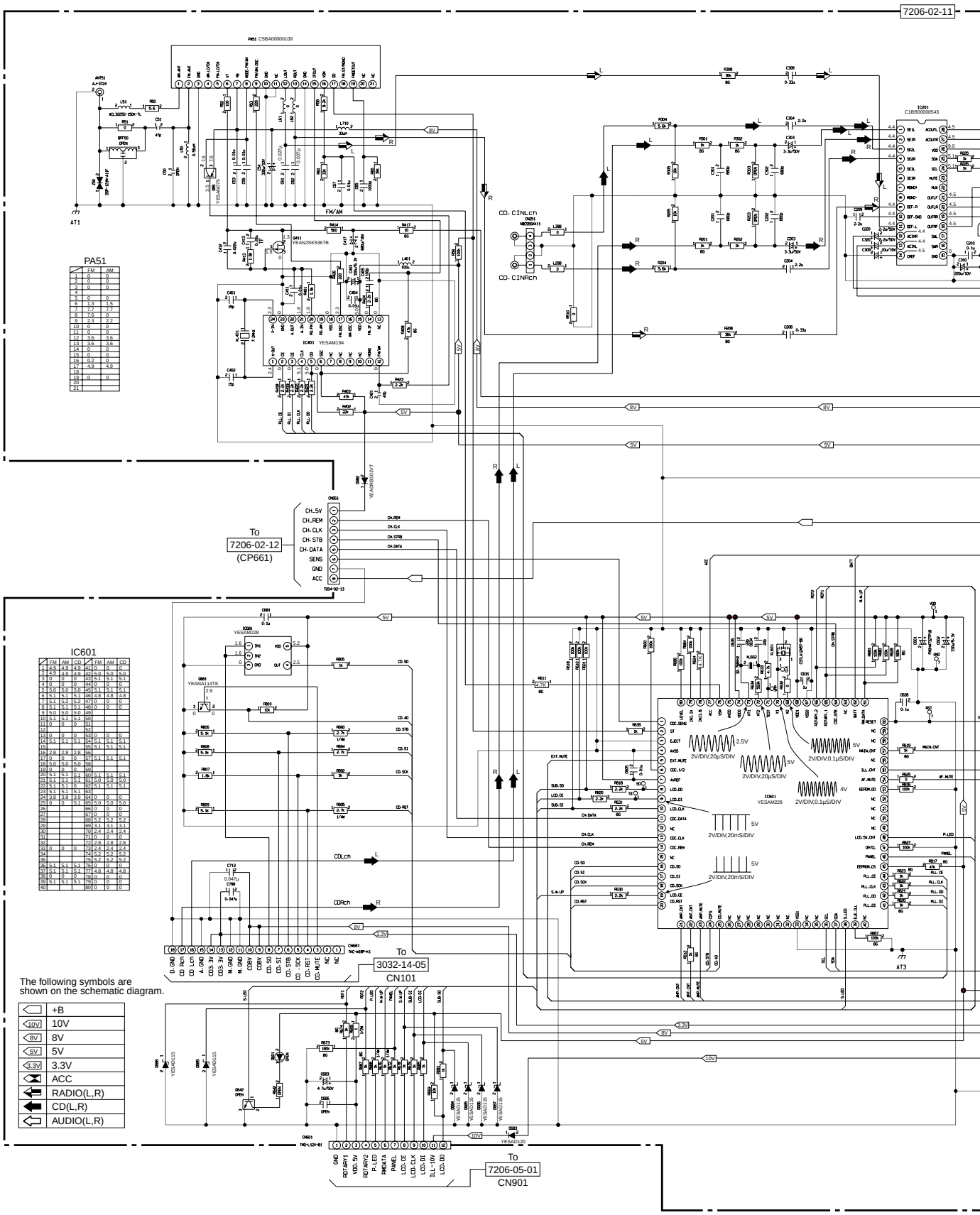

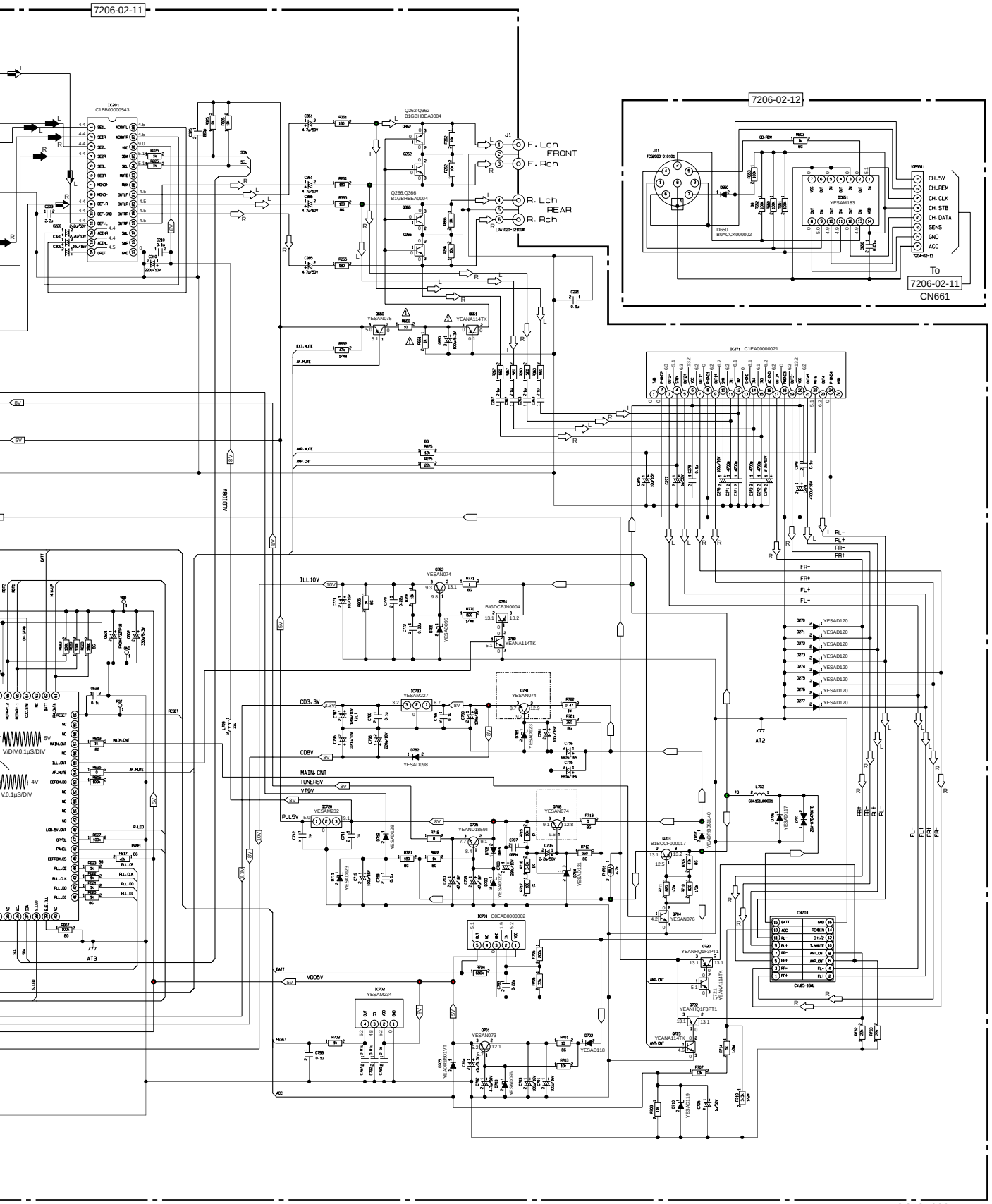
7206-02-11
7206-02-12
F. Lch
FRONT
F. Rch
R. Lch
REAR
R. Rch
CH-5V
CH-REM
CH-CLK
CH-STB
CH-DATA
SENS
GND
ACC
To
7206-02-11
CN661
ILL10V
CD3.3V
CDBV
MAIN-CNT
TUNERBV
VTSV
PLL5V
VDD5V
AT2
AT3

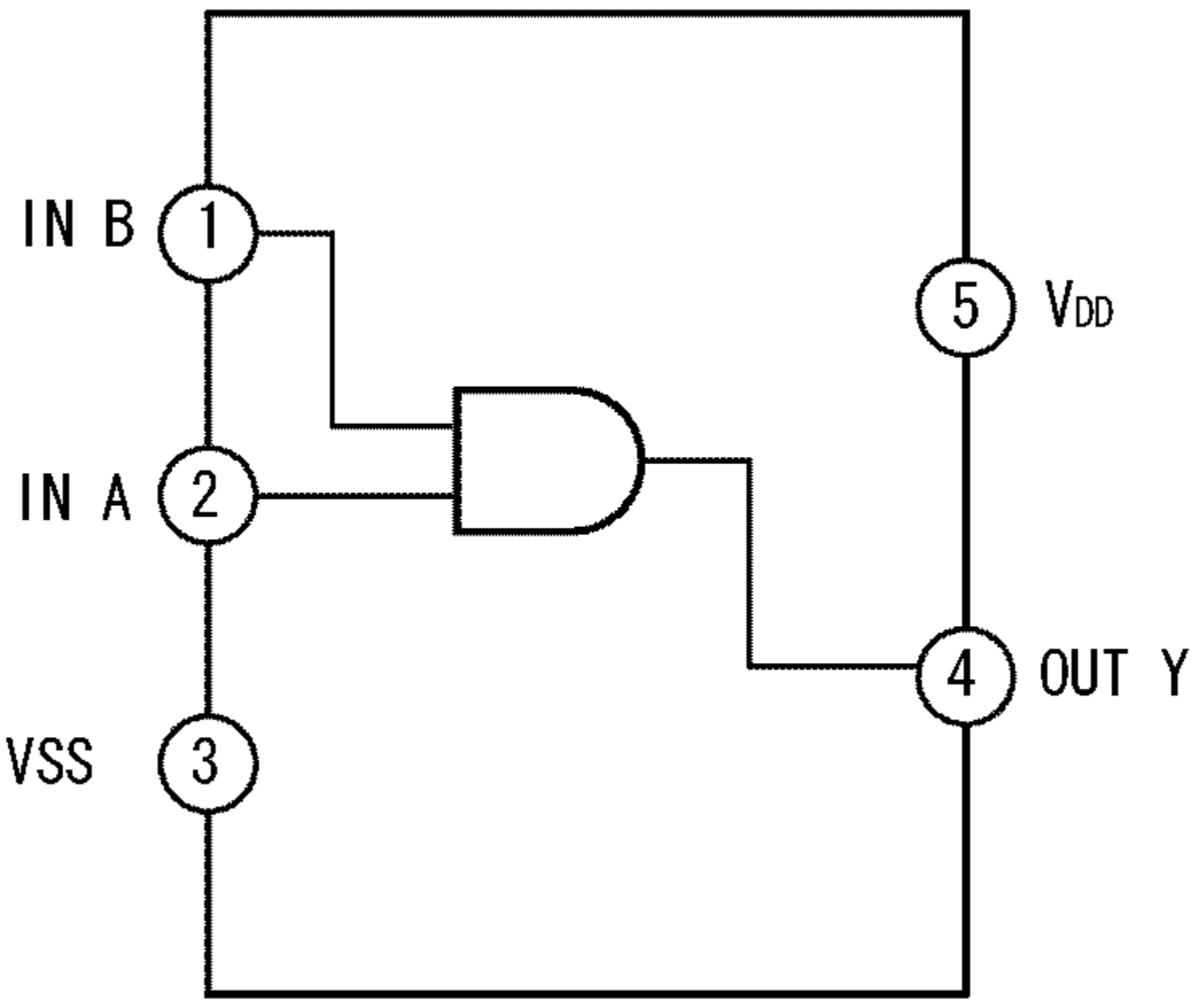
IN B
1
IN A
2
VSS
3
5
VDD
4
OUT Y

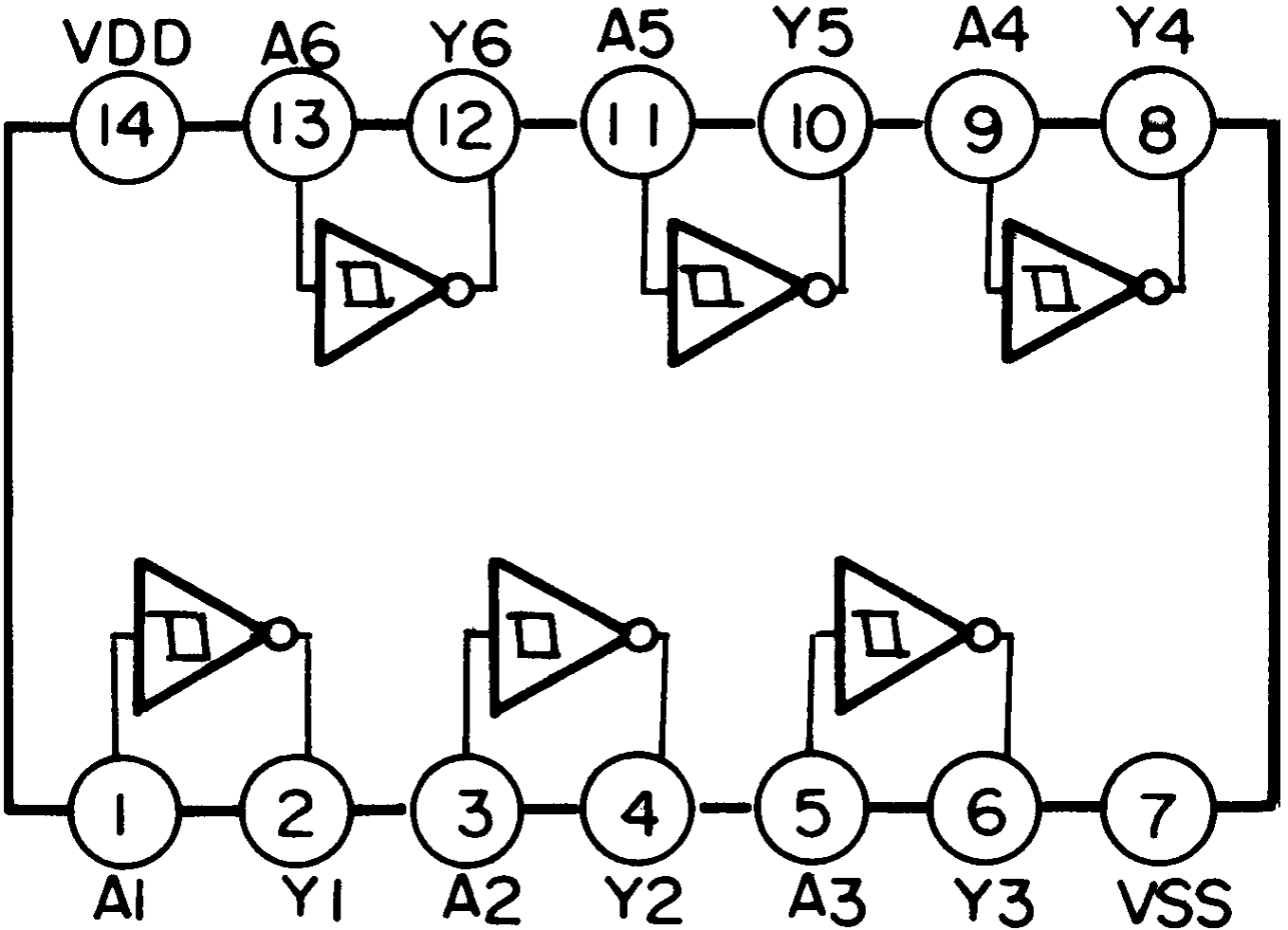
VDD
A6
Y6
A5
Y5
A4
Y4
14
13
12
11
10
9
8
1
2
3
4
5
6
7
A1
Y1
A2
Y2
A3
Y3
VSS

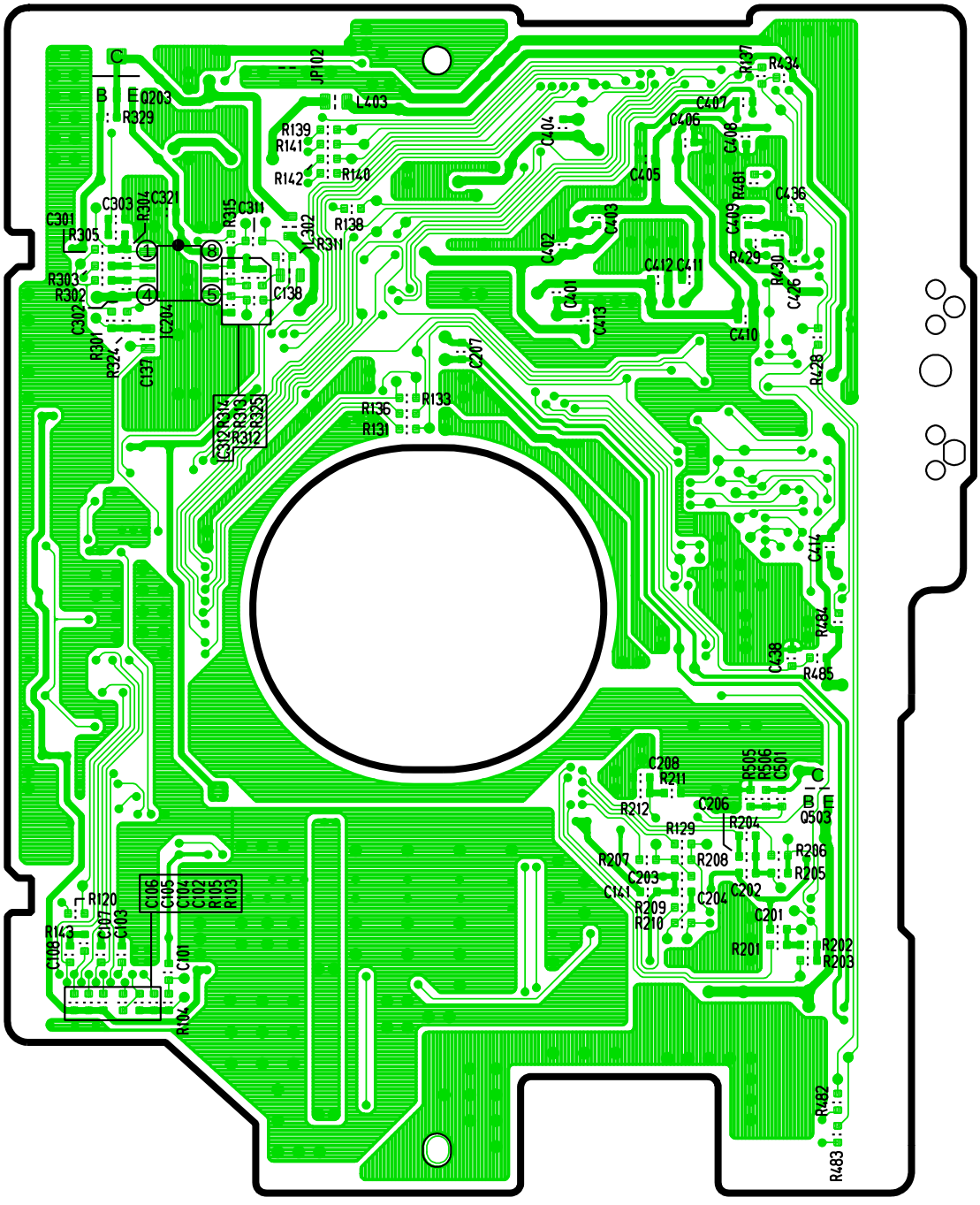

[3032-14-05] [Bottom View]

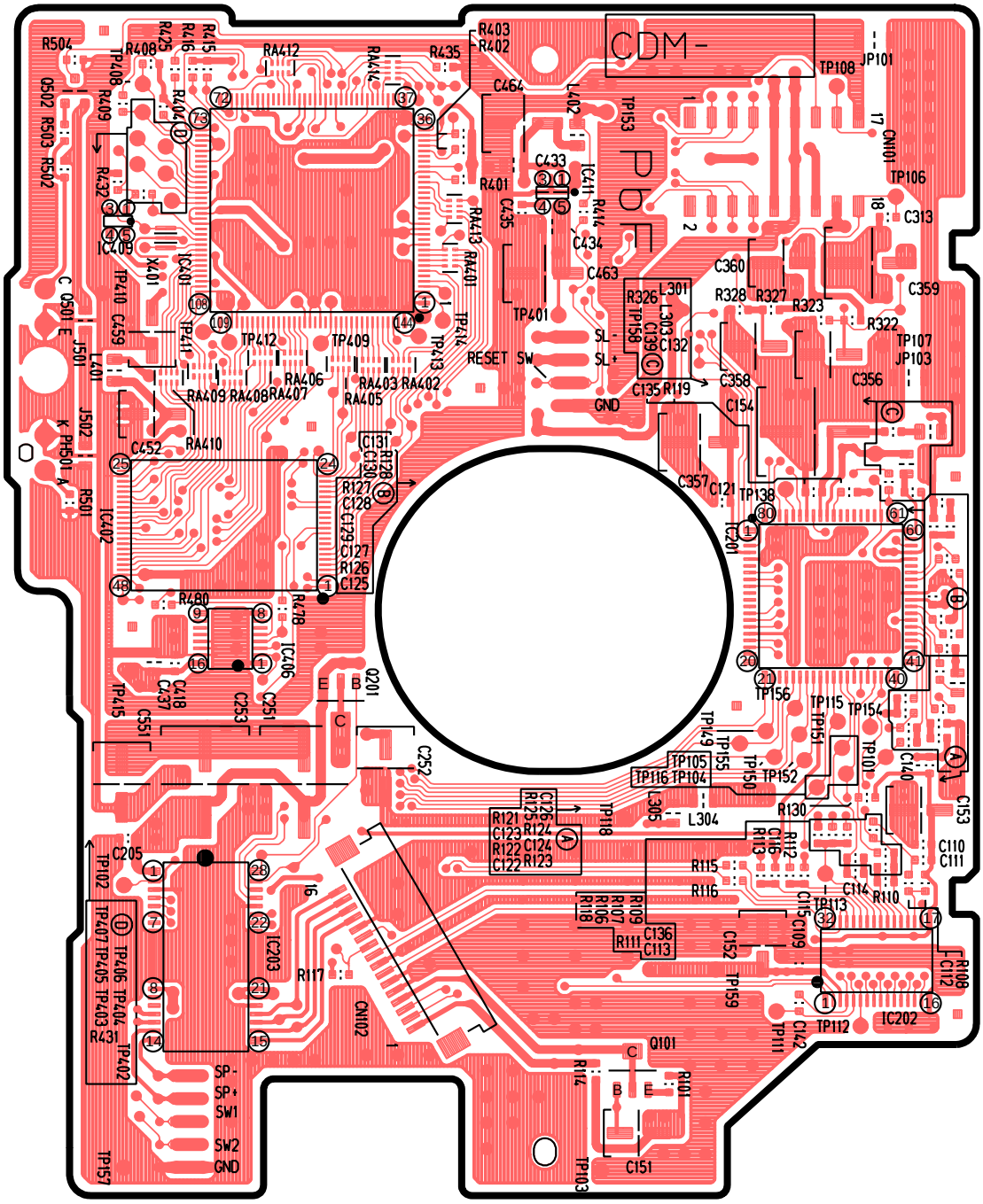

[3032-14-05] [Top View]

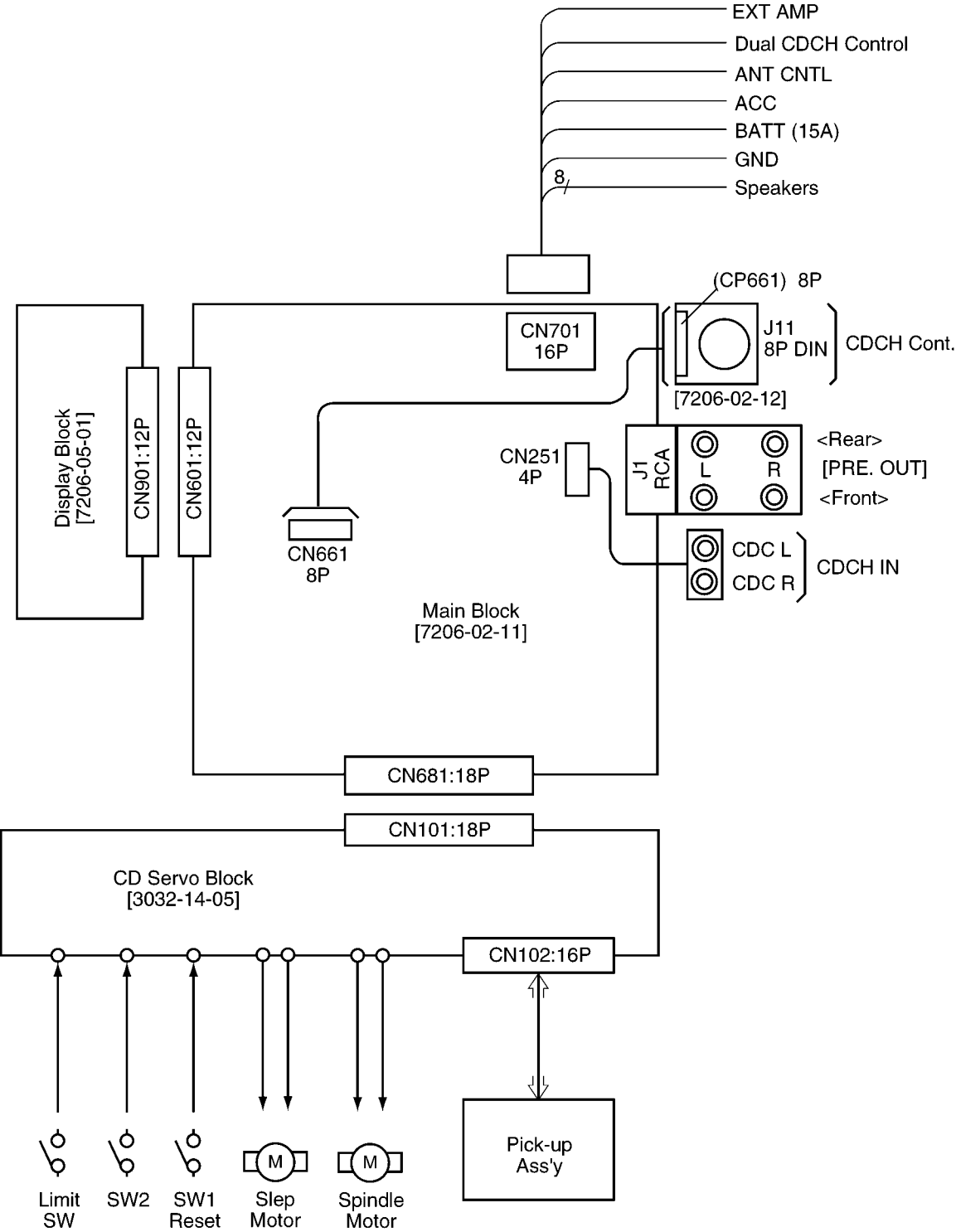
EXT AMP
Dual CDCH Control
ANT CNTL
ACC
BATT (15A)
GND
8
Speakers
(CP661) 8P
CN701
16P
J11
8P DIN
CDCH Cont.
[7206-02-12]
Display Block
[7206-05-01]
CN901:12P
CN601:12P
CN251
4P
J1
RCA
L
R
<Rear>
[PRE. OUT]
<Front>
CN661
8P
CDC L
CDC R
CDCH IN
Main Block
[7206-02-11]
CN681:18P
CN101:18P
CD Servo Block
[3032-14-05]
CN102:16P
Pick-up
Ass'y
M
M
Limit
SW
SW2
SW1
Reset
Slep
Motor
Spindle
Motor

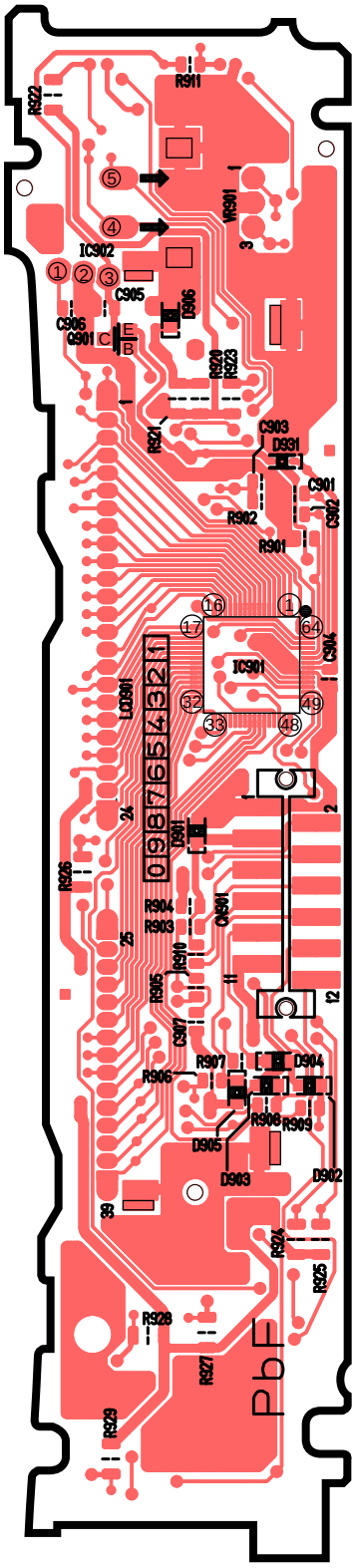

[7206-05-01] [Top View]

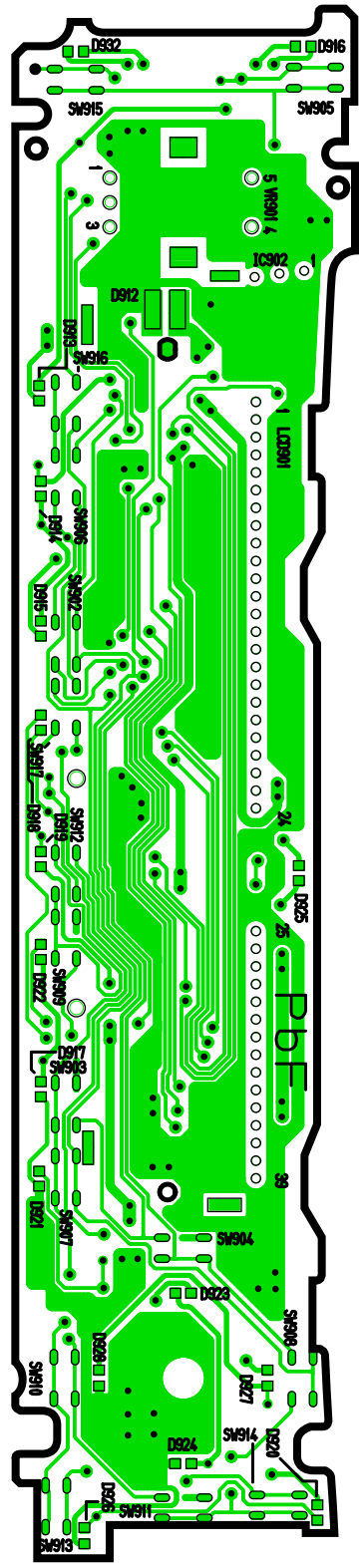

[7206-05-01] [Bottom View]

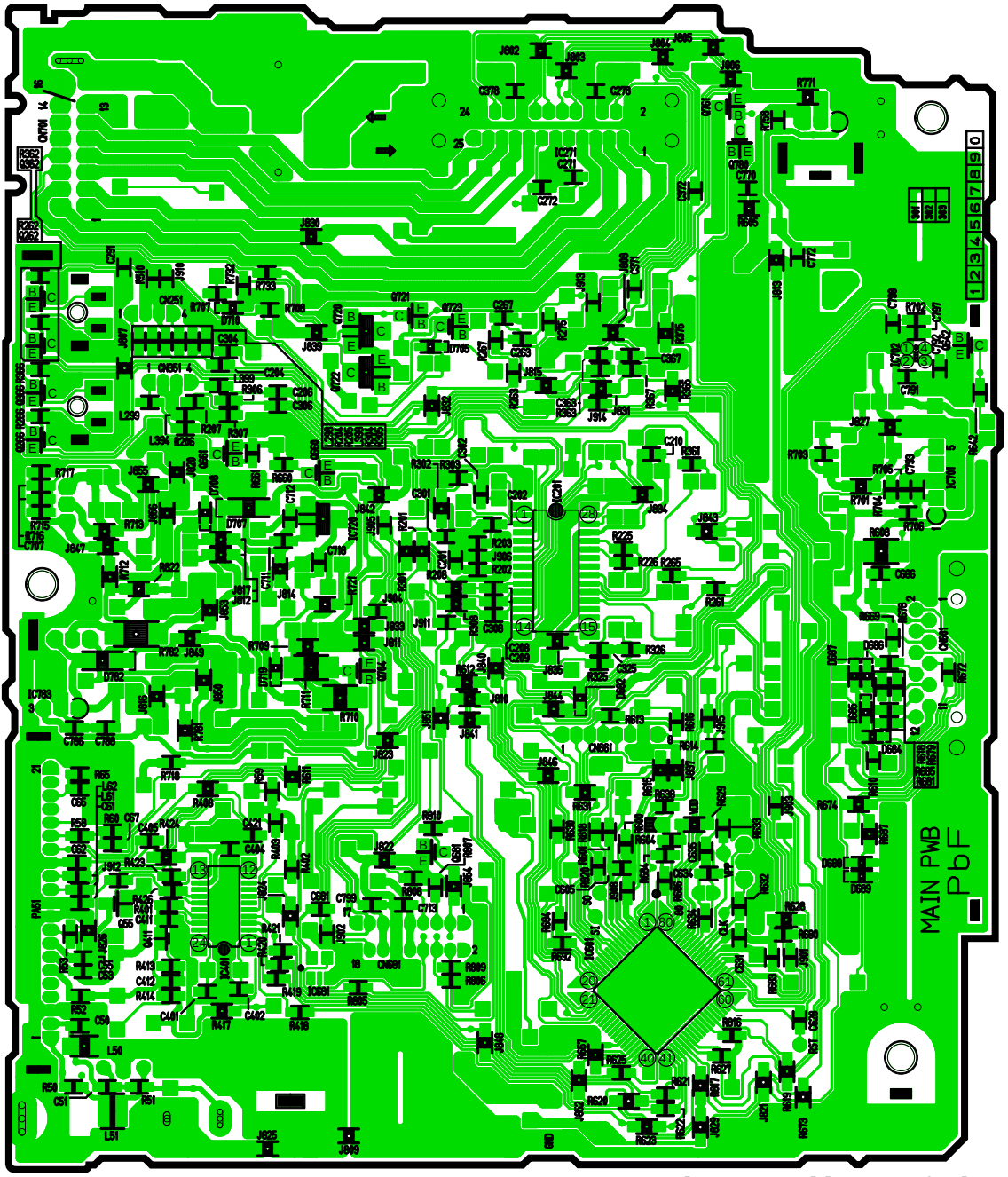

[7206-02-11] [Bottom View]

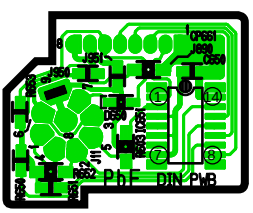

[7206-02-12]
[Bottom View]

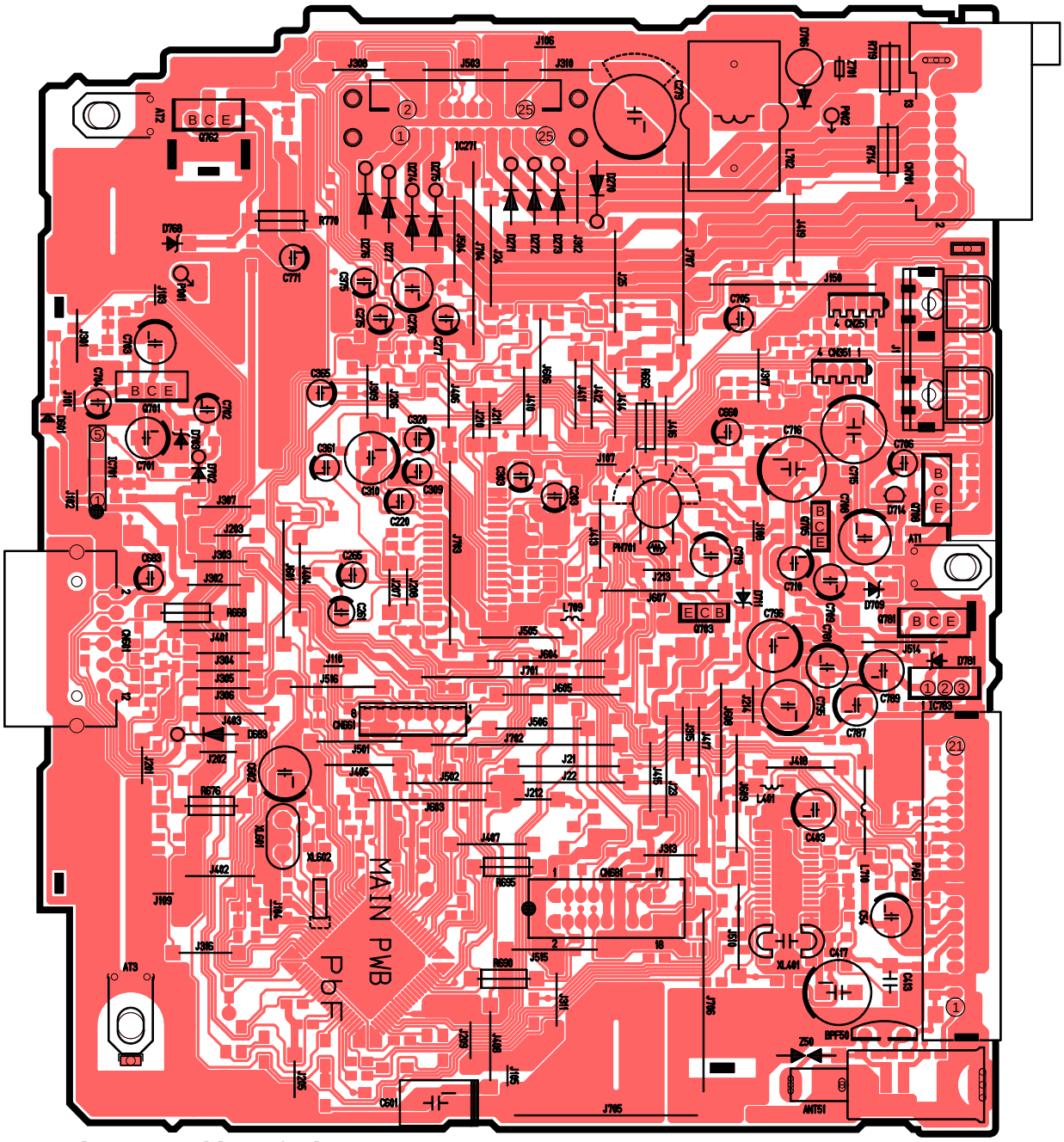

[7206-02-11] [Top View]

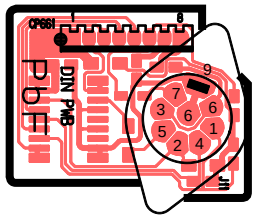

[7206-02-12]
[Top View]

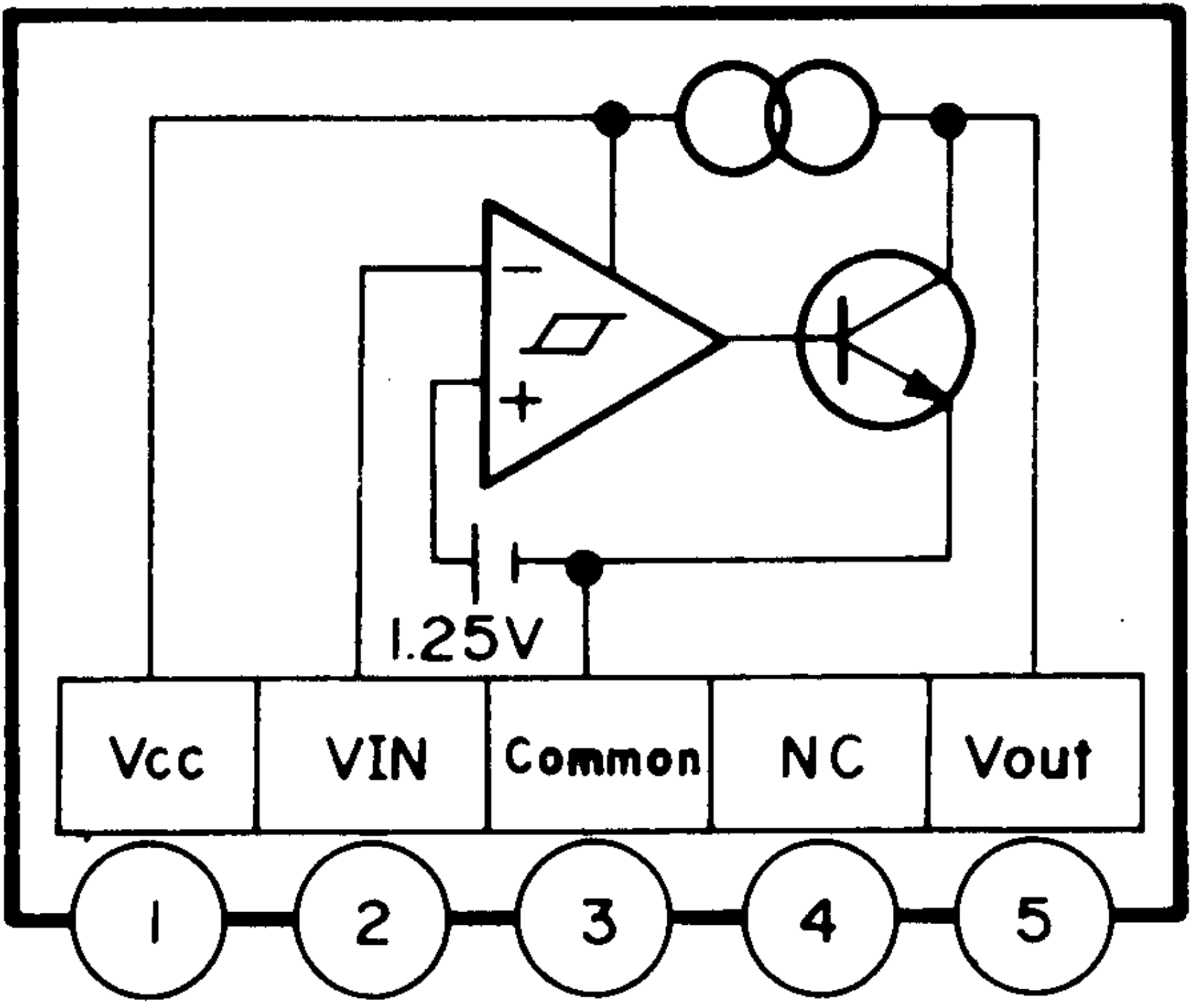
1.25V
Vcc
VIN
Common
NC
Vout
1
2
3
4
5

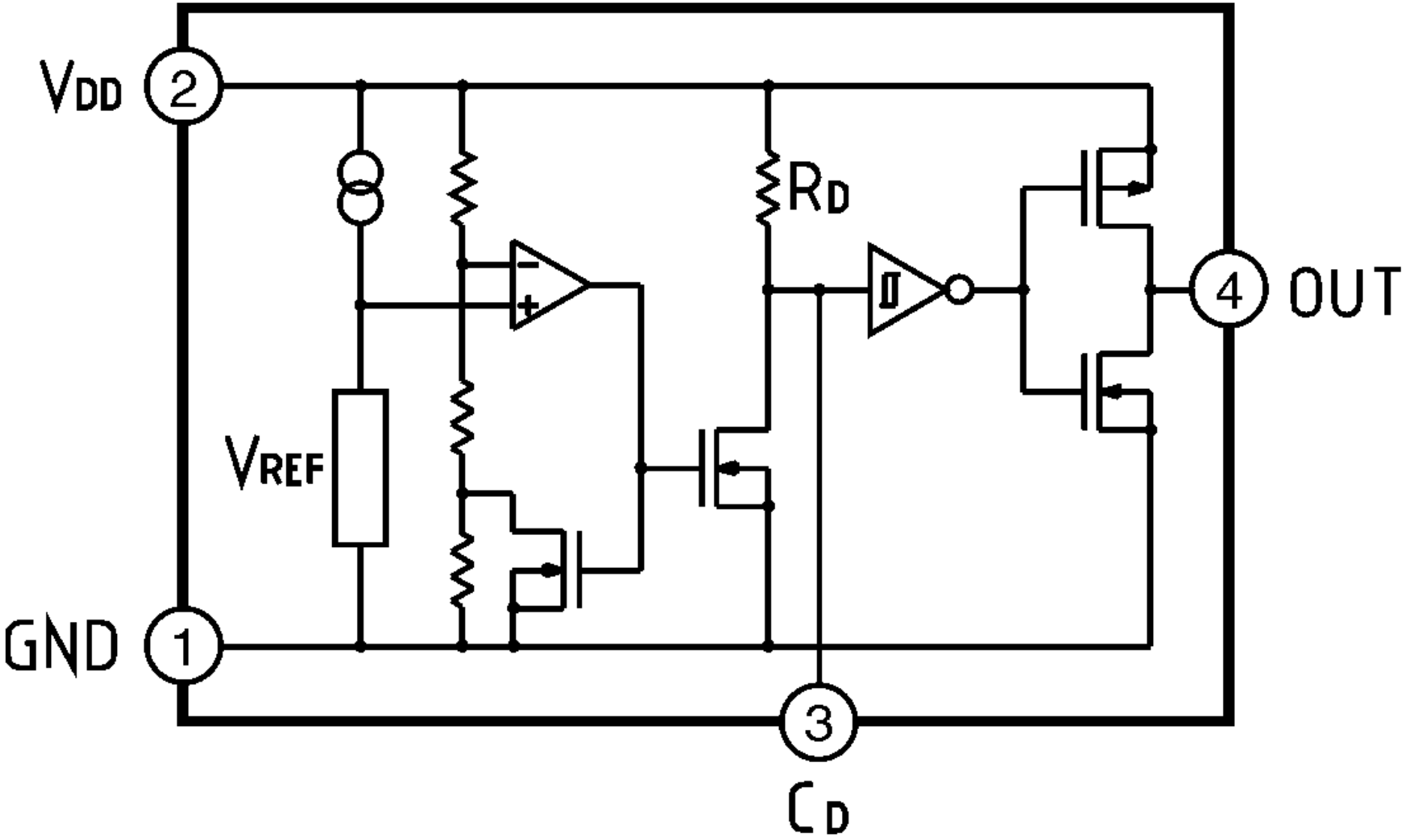
VDD
2
RD
4
OUT
VREF
GND
1
3
CD