Clarion

SERVICE MANUAL

Closer Relations through "CLARION SERVICE MANUAL"

MODEL PU-697A-02

Manufacturer CLARION CO., LTD. / Export Division CLARION SHOJI CO., LTD.
3, Kojimachi 5-chome, Chiyoda-ku, Tokyo, 102 Japan Tel: (265)2931 Telex: J22908, J22152 CLARISHO
Overseas Sales Branch Offices:
CLARION SHOJI (EUROPA) G.m.b.H. Rudolf-Diesel-Strasse 2, 6236 Eschborn 2, West Germany Tel: 06173-61041-42 Telex: 415414
CLARION CORPORATION OF AMERICA 5500 Rosecrans Ave, Lawndale, Calif., 90260 U.S.A. Tel: 213-973-1100 Telex: CLARIONLSA 66-4447
CLARION (HONG KONG) CO., LTD. 526, Ocean Centre, Canton Road, Tsimshatsui, Kowloon, Hong Kong Tel: 3-690528 Telex: HX64293 CLAHK

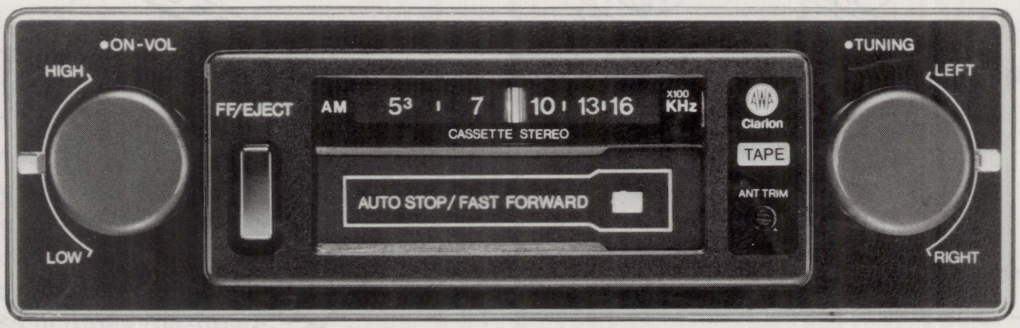

■SPECIFICATIONS:

○ Radio section

Circuit system:	Superheterodyne
Tuning system:	Manual μ-tuning
Receive range:	528KHz to 1,610KHz
Intermediate frequency:	452.5KHz
Maximum sensitivity:	Less than 20dB
Quieting sensitivity:	Less than 33dB (at 20dB S/N)
Image rejection ratio:	More than 54dB
IF rejection ratio:	More than 40dB
Selectivity:	More than 20dB (at ±10KHz detune)
A.G.C:	More than 45dB
Fidelity:	100Hz H: −1±3dB
	L: +1±3dB
	4,000Hz H: −13±5dB
	L: −28±5dB

○ Tape section

Reproduction system:	4 track, 2 channel, stereo cassette tape player (Monaural tape playable)
Tape speed:	4.75cm/sec (17/8 ips)
Wow and flutter:	Less than 0.4% (R.M.S)
S/N:	More than 40dB
Cross talk:	More than 30dB (for adjacent channel)
	More than 40dB (for adjacent track)
Reproduction frequency range:	50Hz to 10,000Hz
Fast forward time:	Less than 200 seconds (C-60)

Printed in Japan 298-2241-00 Feb.'79

■PRINTED WIRING BOARD:

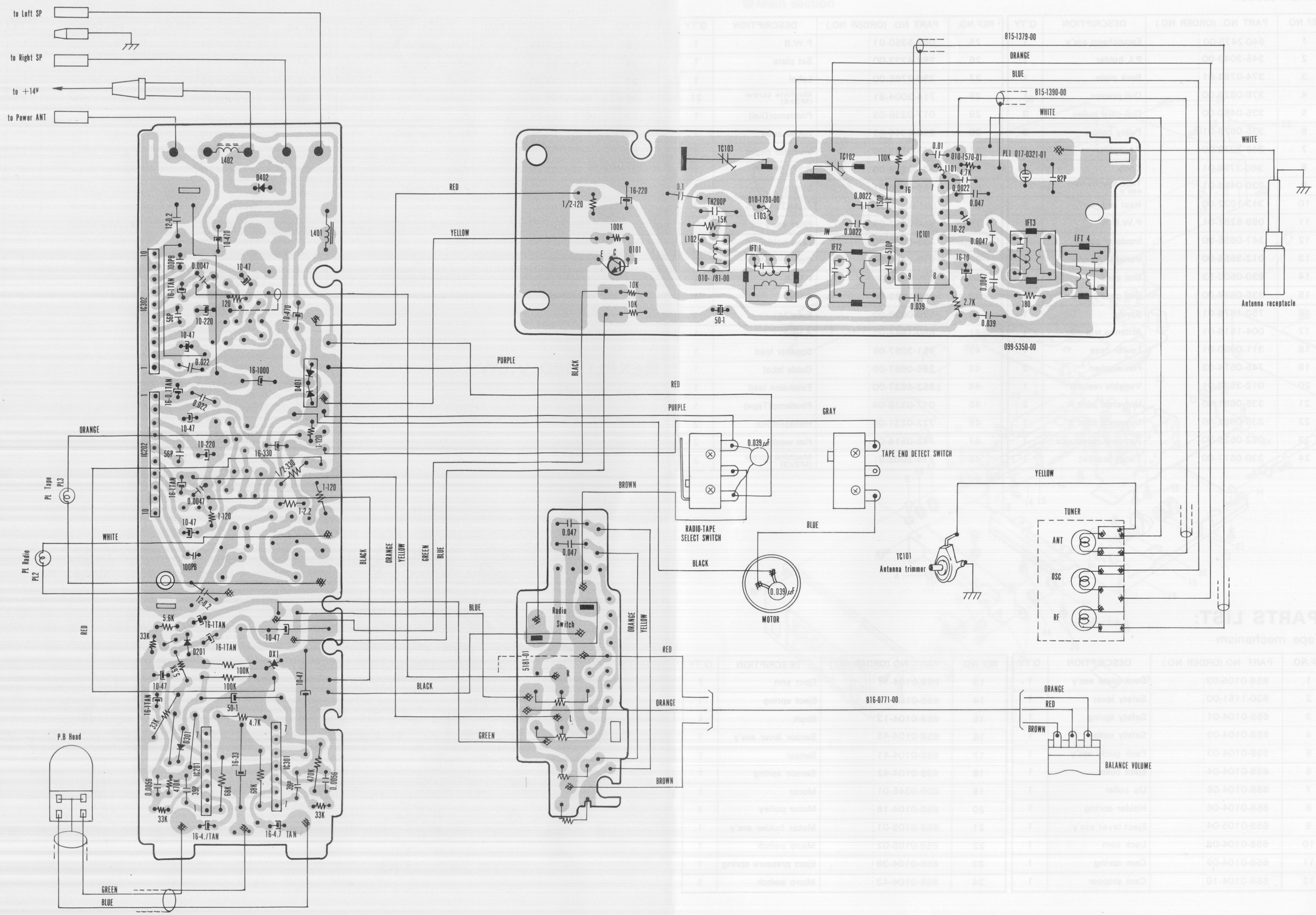

■PARTS LIST:

◎Electrical section

REF.NO.	PART NO. (ORDER NO.)	DESCRIPTION	Q'TY
D_{401}	001-0072-00	Diode(10DC-1)	1
$D_{201,301}$	001-0095-00	Diode(1S2076)	2
D_{z1}	001-0099-01	Diode(HZ7B)	1
D_{402}	001-0186-00	Diode(10E2)	1
$TC_{102,103}$	004-1505-01	Trimmer(RF, OSC)	1
TC_{101}	004-1516-01	Trimmer(ANT)	1
IFT_1	005-0735-00	IF-transformer	1
IFT_3	005-0736-00	IF-transformer	1
$IFT_{2,4}$	005-0737-00	IF-transformer	2
L_{401}	009-0603-00	Choke	1
L_{101}	010-1570-01	Coil	1
L_{402}	010-1686-00	Coil	1
L_{103}	010-1730-00	Coil	1
L_{102}	010-1781-00	Coil	1
VR_1	012-3533-01	Variable resistor (Balance)	1
VR_2	012-3555-00	Variable resistor (VOL, TONE, SW)	1
PL_1	017-0321-01	Pilotlamp(NEON)	1
PL_2	017-0338-03	Pilotlamp(Dial)	1
PL_3	017-0338-04	Pilotlamp(Tape)	1
$IC_{201,301}$	051-0020-02	IC(TA7120)	2
$IC_{202,302}$	051-0256-02	IC(TA7217AP)	2
IC_{101}	051-0066-00	IC(HA1199)	1
Q_{101}	102-0458-02	Transistor (2SC458B)	1
$C^{205,206,208}_{306,308}$	042-0239-00	Tantalum capacitor (16V1μF)	5
C_{402}	042-0178-00	Electrolytic capacitor (16V1000μF)	1
$C_{201,301}$	042-0174-00	Tantalum capacitor (16V4.7μF)	2
$C_{216,316}$	043-0020-00	Metallic capacitor (12V0.2μF)	2
C_{102}	141-1033-10	Polyester capacitor (50V0.01μF)	1
C_{104}	141-1043-10	Polyester capacitor (50V0.1μF)	1
$C_{103,108,111}$	141-2223-10	Polyester capacitor (50V0.0022μF)	3
C_{114}	141-3333-10	Polyester capacitor (50V0.033μF)	1
C_{116}	141-3933-10	Polyester capacitor (50V0.039μF)	1
$C_{110,112,209,309}$	141-4723-10	Polyester capacitor (50V0.0047μF)	4
$C_{105,207,307}$	141-4733-10	Polyester capacitor (50V0.047μF)	3
C_{115}	141-5113-10	Polyester capacitor (50V510PF)	1
$C_{204,304}$	141-5623-10	Polyester capacitor (50V0.0056μF)	2
$C_{213,313}$	141-2233-10	Polyester capacitor (50V0.022μF)	2
C_{107}	144-1512-10	Mica capacitor (150PF)	1

REF.NO.	PART NO. (ORDER NO.)	DESCRIPTION	Q'TY
$C_{211,311}$	144-5602-10	Mica capacitor (56PF)	2
C_{109}	150-2012-50	Ceramic capacitor (200PFTH)	1
$C_{202,302}$	150-3902-13	Ceramic capacitor (39PFCH)	2
C_{101}	150-8202-13	Ceramic capacitor (82PFCH)	1
$C_{215,315}$	160-1012-05	Ceramic capacitor (100PFB)	2
$C_{404,405}$	160-3934-02	Ceramic capacitor (0.039μFYG)	2
C_{305}	180-1054-61	Electrolytic capacitor (50V1μF)	1
C_{z3}	042-0248-00	Electrolytic capacitor (16V0.1μFTAN)	1
C_{106}	180-2264-22	Electrolytic capacitor (10V22μF)	1
C_{401}	180-2274-32	Electrolytic capacitor (16V220μF)	1
C_{z1}	180-3364-31	Electrolytic capacitor (16V33μF)	1
C_{403}	180-3374-32	Electrolytic capacitor (16V330μF)	1
$C_{210,310}$	042-0219-00	Electrolytic capacitor (10V220μF)	2
$C_{303,z2}$	180-4764-21	Electrolytic capacitor (10V47μF)	2
$C^{214,314}_{203,212,312}$	180-4764-22	Electrolytic capacitor (10V47μF)	5
C_{117}	180-1054-62	Electrolytic capacitor (50V1μF)	1
$C_{217,317}$	180-4774-22	Electrolytic capacitor (10V470μF)	2
C_{113}	180-1064-32	Electrolytic capacitor (16V10μF)	1
R_{401}	110-1211-42	Solid resistor (½W120Ω)	1
R_{z2}	110-3312-42	Solid resistor (½W330Ω)	1
$R_{204,304}$	111-1041-21	Film resistor (¼sW100KΩ)	2
R_{102}	111-1531-32	Film resistor (¼W15KΩ)	1
R_{104}	111-2721-31	Film resistor (¼W2.7KΩ)	1
R_{307}	111-3331-21	Film resistor (¼sW33KΩ)	1
$R_{202,207,302}$	111-3331-22	Film resistor (¼sW33KΩ)	3
R_{z1}	111-4721-21	Film resistor (¼sW4.7KΩ)	1
R_{101}	111-4721-31	Film resistor (¼W4.7KΩ)	1
R_{303}	111-4741-21	Film resistor (¼sW470KΩ)	1
R_{203}	111-4741-22	Film resistor (¼sW470KΩ)	1
$R_{201,301}$	111-6831-21	Film resistor (¼sW68KΩ)	2
$R_{105,108}$	111-1041-32	Film resistor (¼W100KΩ)	2
$R_{206,306}$	111-5621-22	Film resistor (¼sW5.6KΩ)	2
R_{103}	111-1811-32	Film resistor (¼W180Ω)	1
$R_{106,107}$	111-1031-32	Film resistor (¼W10KΩ)	2
$R_{402,403}$	114-1212-52	Film resistor (1W120Ω)	2
R_{404}	114-2292-52	Film resistor (1W2.2Ω)	1
$R_{207,307}$	111-1211-32	Film resistor (¼W120Ω)	2

Film resistor power rating ¼sW is small ¼W type.

REF.NO.	PART NO.(ORDER NO.)	DESCRIPTION	Q'TY
25	658-0104-44	Head panel ass'y	1
26	658-0104-22	Azimuth spring	1
27	011-0254-00	Head	1
28	658-0104-23	Clamp	1
29	658-0104-24	Pinch spring	1
30	658-0104-25	Pinch roller ass'y	1
31	658-0104-26	Panel ring	1
32	630-1153-00	Panel spring	1
33	658-0104-27	Panel pressure	1
34	658-0104-28	Flat washer	1
35	658-0104-29	Flywheel	1
36	658-0104-30	Drive belt	1
37	658-0104-31	Thrust plate	1
38	658-0104-32	Flywheel holder	1
39	658-0104-33	Flat washer	1

REF.NO.	PART NO.(ORDER NO.)	DESCRIPTION	Q'TY
40	658-0104-34	Reel belt	1
41	658-0104-35	Reel base ass'y	1
42	658-0104-46	Reel holder ass'y	1
43	714-2005-81	Machine screw	2
44	743-3000-00	E-ring	3
45	743-5000-00	E-ring	1
46	714-2310-81	Machine screw	2
47	714-2605-81	Machine screw	6
48	714-2606-81	Machine screw	1
49	714-3003-11	Machine screw	1
50	714-2604-41	Machine screw	2
51	716-0347-00	Screw	2
52	741-3000-20	Spring washer	1
53	743-1200-00	E-ring	1
54	743-2000-00	E-ring	2

■EXPLODED VIEW:

◎Tape mechanism

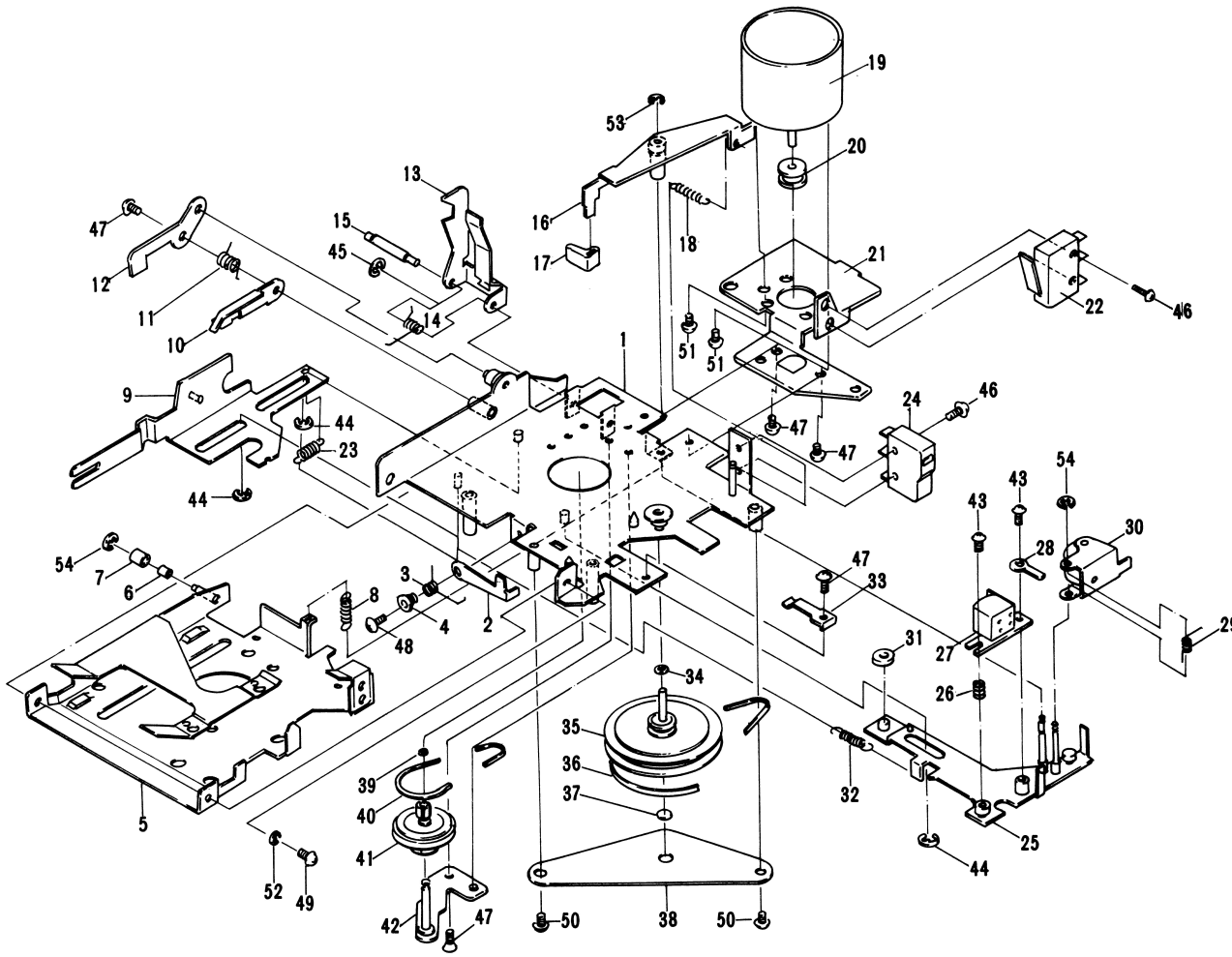

■ADJUSTMENT OF TAPE:

o **Head azimuth adjustment**

Incorrect head azimuth with respect to the tape is one of the causes of bad quality of sound and crosstalk.
When the head azimuth is not correct, adjust according to the following procedure.

1) Play the test tape 315Hz—20VU, set the volume control to Max. and obtain balance by the Balance control.

2) Next play the test tape 6.3KHz—10VU and adjust by turning the head azimuth adjusting screw so that the output level becomes close to maximum.

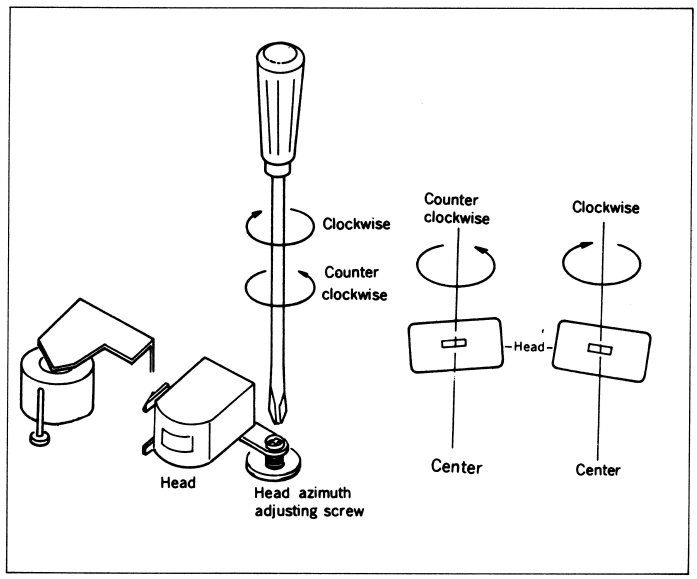

■DIAL CORD STRINGING:

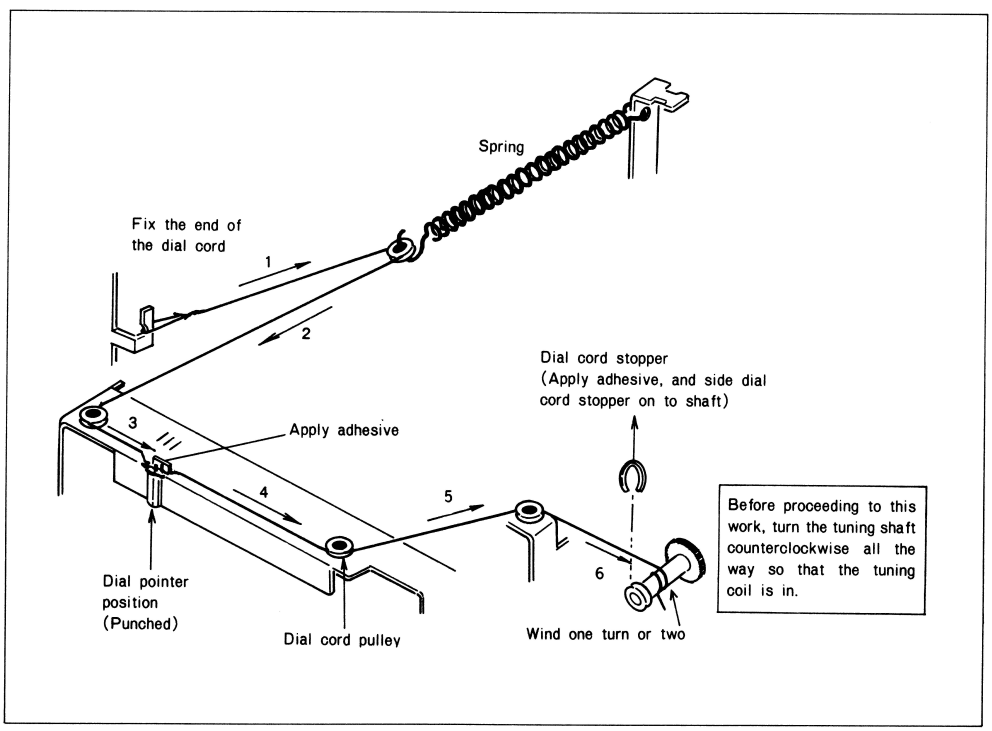

■SEMICONDUCTOR'S OUTER VIEW:

IC

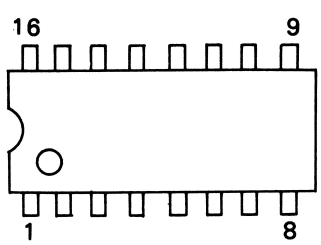

IC-101 051-0066-00 (HA1199)

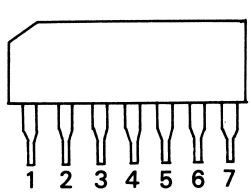

IC-201 051-0020-02
IC-301 (TA-7120P)

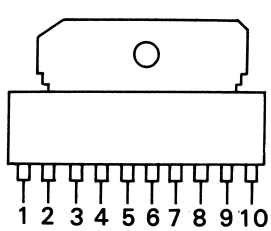

IC-202 051-0256-02
IC-302 (TA-7217AP)

TRANSISTOR

2SC458B

■PARTS LIST:

◎Main section

REF.NO.	PART NO. (ORDER NO.)	DESCRIPTION	Q'TY
1	940-2475-00	Escutcheon ass'y	1
2	345-3043-00	P.L holder	1
3	374-0763-01	Back plate	1
4	376-0826-00	Dial pointer	1
5	335-0460-00	Dial cord pulley	3
6	335-0879-01	Pulley holder	3
7	345-3078-00	P.L holder	1
8	380-3798-01	Knob	1
9	930-0456-01	Tape mechanism ass'y	1
10	313-1022-00	Heat sink	1
11	099-5281-01	P.W.B	1
12	347-0655-00	Insulator paper	1
13	012-3555-00	Variable resister	1
14	830-0500-53	Dial cord	1
15	335-0894-00	Dial cord pulley	1
16	750-1676-01	Spring	1
17	004-1516-01	Antenna trimmer	1
18	311-0950-01	Lower case	1
19	745-0514-02	Flat washer	2
20	012-3533-01	Variable resistor	1
21	335-0881-00	Universal joint A	2
22	335-0882-00	Universal joint B	1
23	092-0529-00	Antenna receptacle	1
24	330-6677-00	Tuner bracket	1

REF.NO.	PART NO. (ORDER NO.)	DESCRIPTION	Q'TY
25	099-5350-01	P.W.B	1
26	286-4232-00	Set plate	1
27	290-2768-00	Label	1
28	714-3004-81	Machine screw (M3x4)	21
29	017-0338-03	Pilotlamp(Dial)	1
30	310-0940-02	Upper case	1
31	347-0755-00	Insulator paper	1
32	931-0878-00	3 coil manual μ-tuner	1
33	746-0668-01	Stopper	1
34	051-0256-02	IC(TA7217AP)	2
35	944-0517-00	Filter ass'y	1
36	335-0580-00	Lead holder	1
37	010-1686-00	Coil	1
38	099-5448-00	P.W.B	1
39	850-1822-00	A-lead	1
40	120-0030-00	Fuse(3A)	1
41	850-1844-01	A-lead	1
42	851-2057-05	Speaker lead	1
43	285-0667-00	Guide label	1
44	852-4637-00	Extension lead	1
45	017-0338-04	Pilotlamp(Tape)	1
46	722-0231-00	Hexagon nut	2
47	745-0514-01	Flat washer	2
48	714-3003-81	Machine screw (M3x3)	2

■PARTS LIST:

◎Tape mechanism

REF.NO.	PART NO.(ORDER NO.)	DESCRIPTION	Q'TY
1	658-0105-03	Deck plate ass'y	1
2	630-1151-00	Safety lever	1
3	658-0104-01	Safety spring	1
4	658-0104-02	Safety collar	1
5	658-0104-03	Pack guide ass'y	1
6	658-0104-04	Eject collar	1
7	658-0104-05	Up collar	1
8	658-0104-06	Holder spring	1
9	658-0105-04	Eject lever ass'y	1
10	658-0104-08	Lock cam	1
11	658-0104-09	Cam spring	1
12	658-0104-10	Cam stopper	1

REF.NO.	PART NO.(ORDER NO.)	DESCRIPTION	Q'TY
13	658-0104-11	Eject arm	1
14	658-0104-12	Eject spring	1
15	658-0104-13	Shaft	1
16	658-0104-45	Sensor lever ass'y	1
17	658-0104-41	Sensor	1
18	638-0104-42	Sensor spring	1
19	020-0346-01	Motor	1
20	658-0104-16	Motor pulley	1
21	658-0105-01	Motor holder ass'y	1
22	658-0105-02	Micro switch	1
23	658-0104-38	Eject pressure spring	1
24	658-0104-43	Micro switch	1

■EXPLODED VIEW:

◎Main section

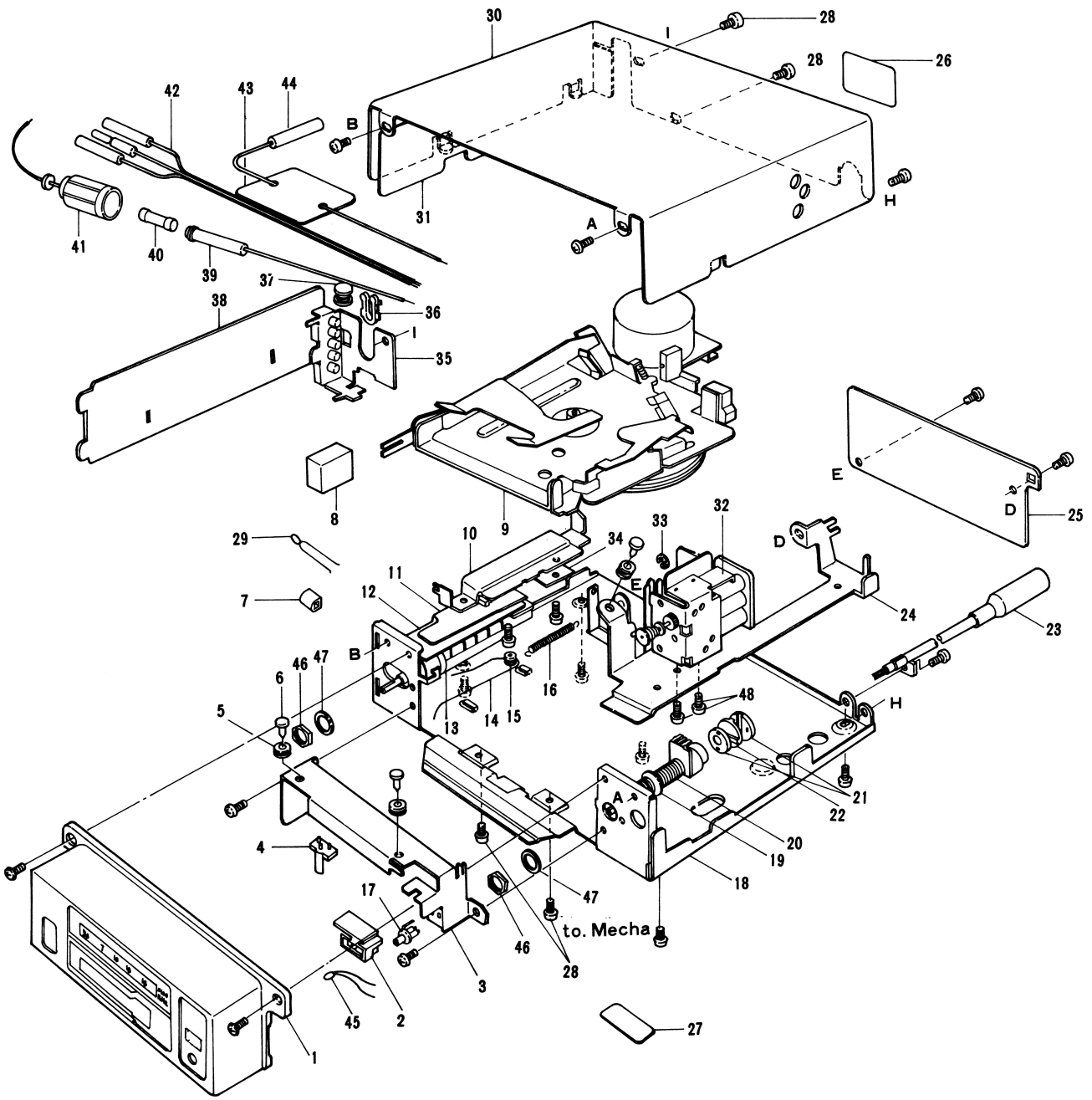

■CIRCUIT DIAGRAM:

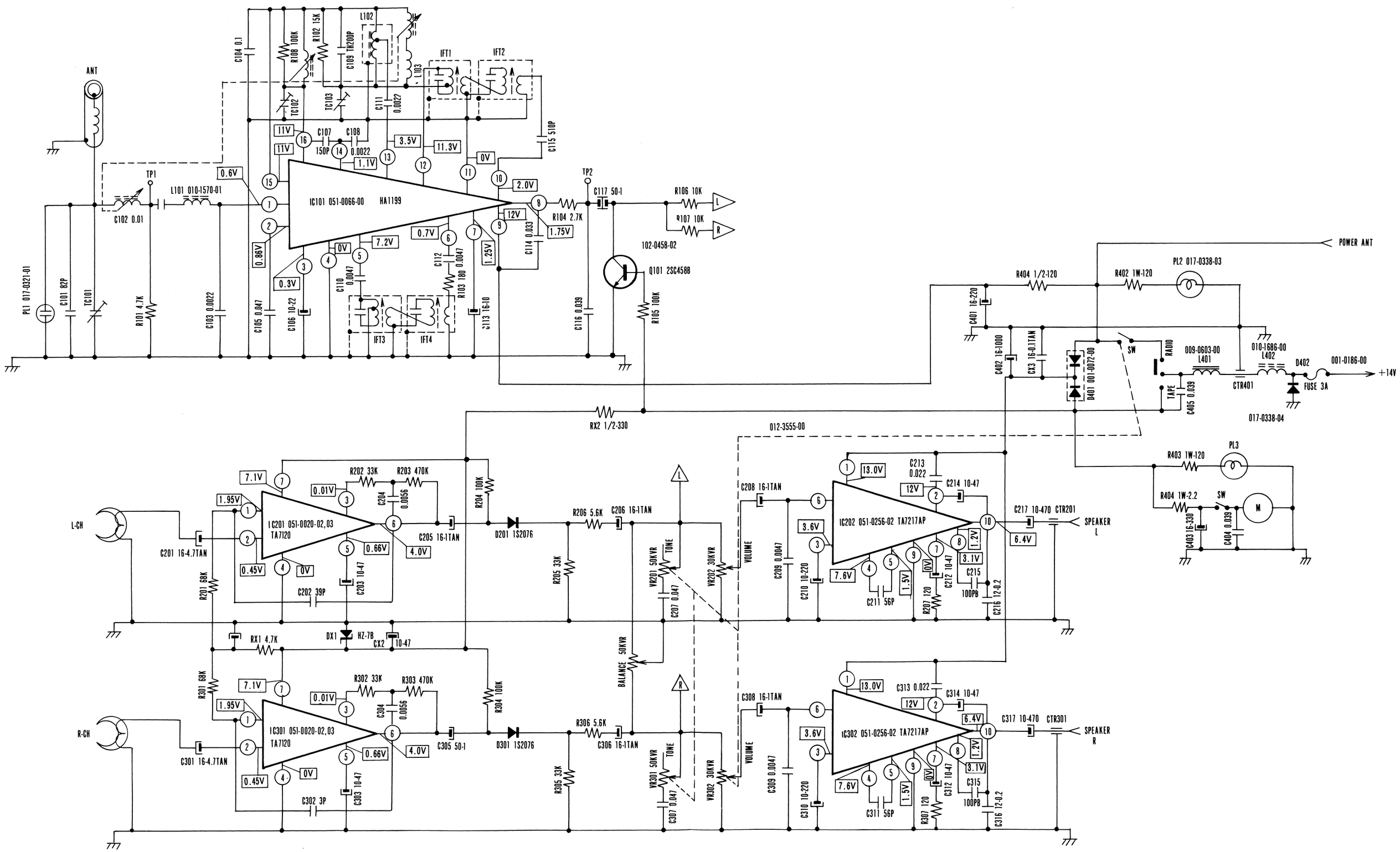

○ **Synthesis**

Power supply voltage:	DC 14.0V (10.8V to 15.6V) Negative ground
Current consumption:	Less than 1.5A (at max. output)
Load impedance:	4Ω×2
Power output:	More than 3.5W×2 (at 10% distortion) More than 5.5W×2 (at max. volume)
Semiconductors:	5 ICs, 1 transistor and 5 diodes
Weight:	1.24Kg
Dimensions:	Width 177mm Height 43.5mm Depth 150mm

■FEATURES:

- ○ Motor antenna lead
  Since motor antenna and radio switches are combined, antenna can operating the radio.
- ○ Since the radio section is all IC, the circuitry is simple.
- ○ Since the antenna trimmer is at the front of the escutcheon, adjustment without removal is possible.

■COMPONENT VIEW:

Parts bag 1

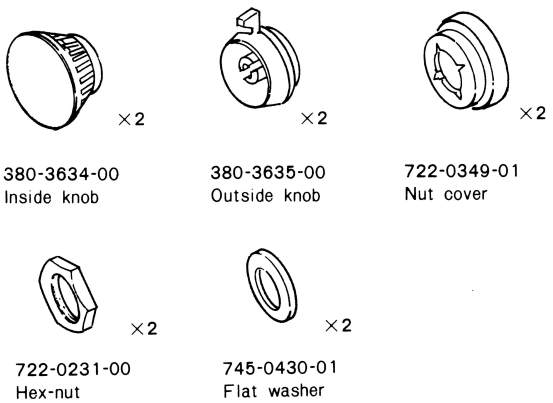

380-3634-00 Inside knob
380-3635-00 Outside knob
722-0349-01 Nut cover
722-0231-00 Hex-nut
745-0430-01 Flat washer

Parts bag 1

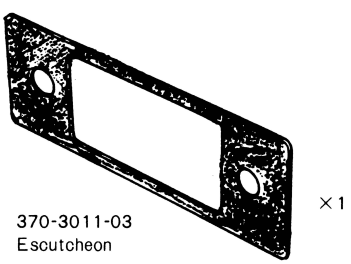

370-3011-03 Escutcheon

852-4649-00 Extension lead 1

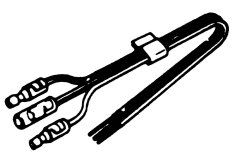

852-5115-00 Extension lead 1

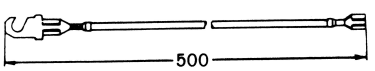

300-4976-00 Mounting bracket 1

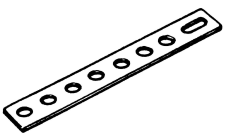

Parts bag 1

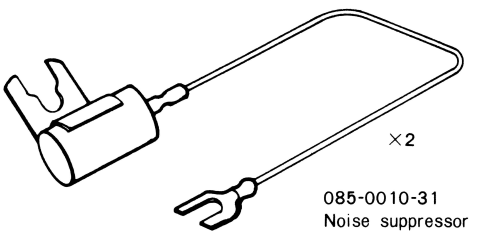

085-0010-31 Noise suppressor

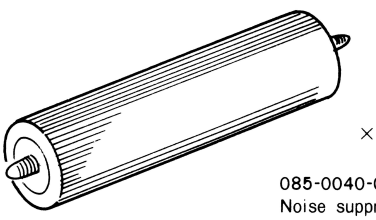

085-0040-01 Noise suppressor

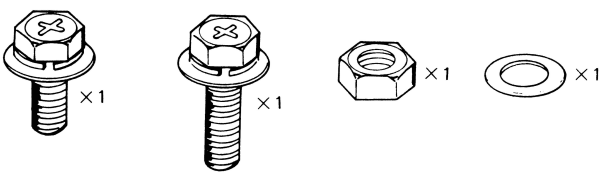

734-5010-31 D-Sems hex-bolt (M5×0.8×1.0)
734-5016-31 D-Sems hex-bolt (M5×0.8×16)
723-5000-11 Hex-nut (M5×0.8)
740-5000-10 Flat washer

■ADJUSTMENTS:

<RADIO CIRCUIT>

Adjustment item	Signal input section	Signal output section	Signal frequency	Adjustment section	Adjustment	Instruments required	Note
IFT	TP1	TP2	452.5KHz	IFT1,2,3,4	Adjust the cores of IFT maximum waveform height with good symmetry.	● Sweep generator ● Oscilloscope ● V.T.V.M	IF curve Vol: minimum Tone: maximum Balance: center Dial pointer: right end
Tracking	Antenna receptacle	Speaker lead	1,620KHz	TC203 (OSC Trimmer)	Adjust the trimmers or coil for maximum indication of V.T.V.M	● Standard signal generator ● V.T.V.M ● Dummy load (4Ω) ● Dummy ANT	to SSG (75Ω) 5Ω 15PF 65PF to SET Use dummy antenna between SSG and antenna receptacle
			600KHz	L102 (OSC Coil)			
			1,400KHz	TC201 (ANT Trimmer) TC202 (RF Trimmer)			

■ANTENNA TRIMMER ADJUSTMENT

Antenna trimmer must be adjusted in the following cases. It helps increasing the sensitivity.

- o After installing or after repairing the set.
- o When the antenna or the antenna cable is replaced.
- o When the radio sensitivity is poor and noise is prominent.

● **Method of adjustment**

Set the receiver vol. control to max., tone control to high, and the dial pointer to around 1,400kHz to receive white noise (hissing noise) and adjust the antenna trimmer (screw) so that the output becomes maximum.

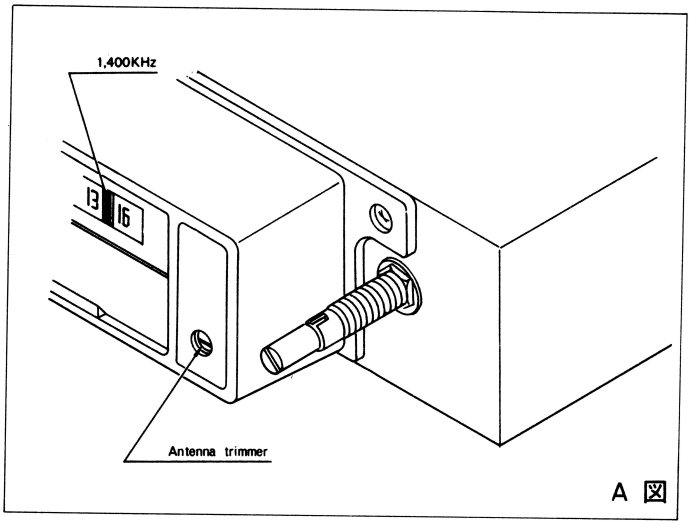

A 図

■TROUBLESHOOTING:

RADIO SECTION (circuit)

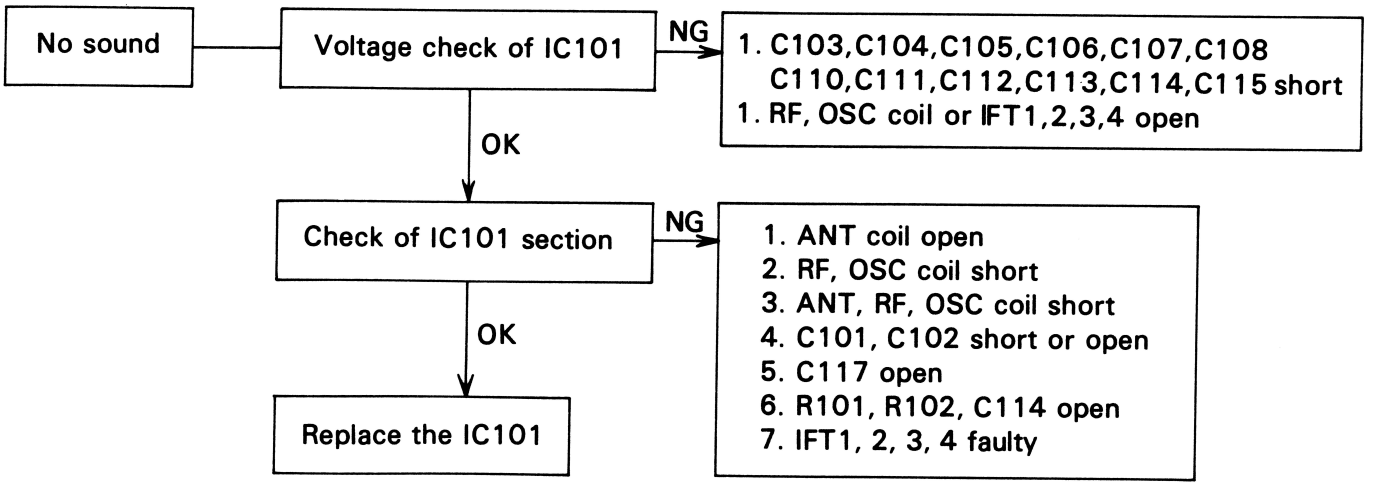

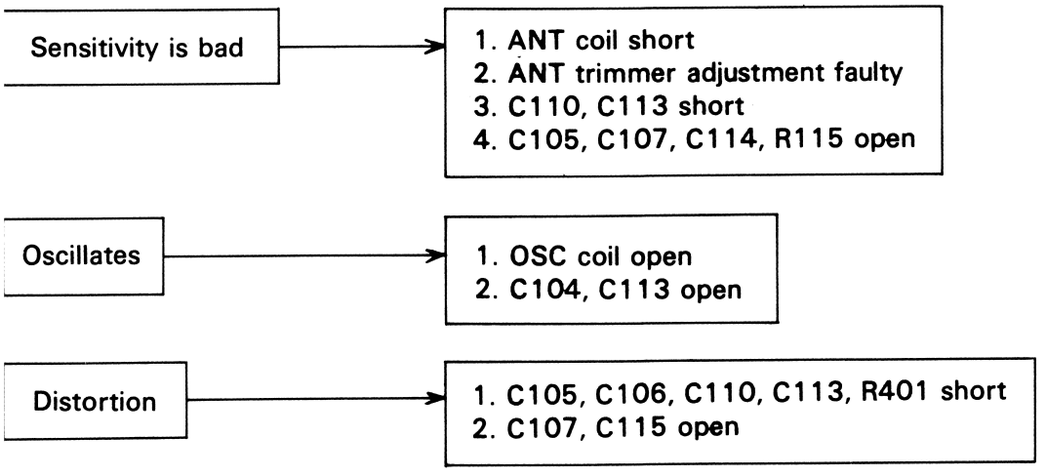
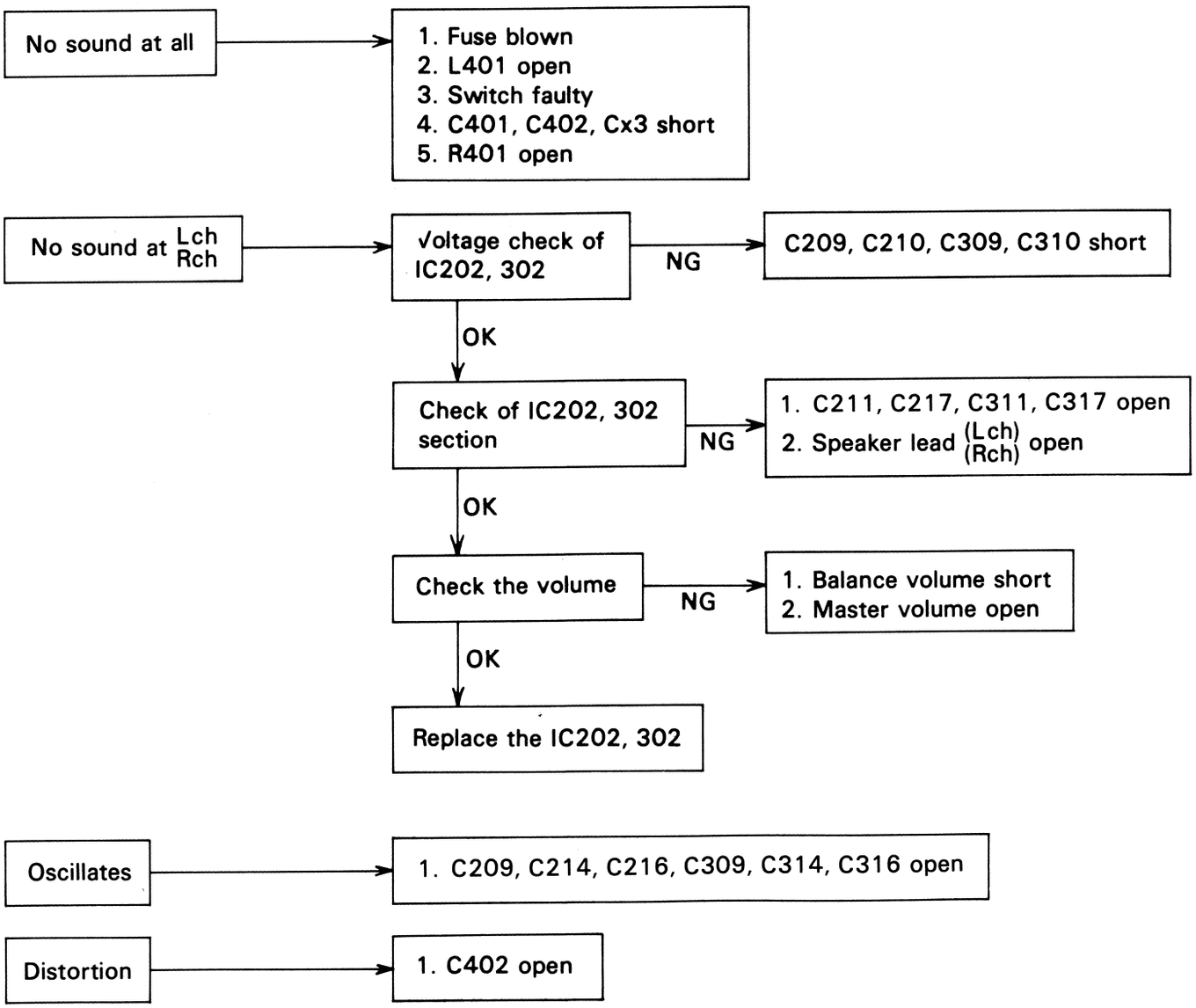
AUDIO SECTION