Clarion

SERVICE MANUAL

Closer Relations through "CLARION SERVICE MANUAL"

MODEL PE-823A

Fabricant: CLARION CO., LTD./Exportations: CLARION SHOJI CO., LTD.
3, Kojimachi 5-chome, Chiyoda-ku, Tokyo, 102 Japan Tel.: (265) 2931 Telex: J22908, J22152 CLARISHO
Succursales outre-mer:
CLARION SHOJI (EUROPA) G.M.B.H. 2000 Hamburg 76, Schöne Aussicht 35, West Germany. Tel.: 220-7667 Telex: 41214969
CLARION SHOJI CO., LTD. (U.S.A.) 5500 Rosecrans Ave., Lawndale, Calif., 90260 U.S.A. Tel.: 213-973-1100 Telex: 66-4447
CLARION CORPORATION OF AMERICA 5500 Rosecrans Ave., Lawndale, Calif., 90260 U.S.A. Tel.: 213-973-1100 Telex: 66-4447
CLARION CORPORATION OF AMERICA, EASTERN DIVISION 421 North Midland Ave., Saddle Brook, N.J. 07662 U.S.A. Tel.: 201-791-1200 Telex: 13805
CLARION (MALAYSIA) SDN. BHD. 9 1/2 m.s. Bayan Lepas, Penang, Malaysia Tel.: 897-206, 897-334 Telex: PG 255 (Penang)
CLARION DO BRASIL INDUSTRIA E COMERCIO LTDA. Caixa Postal 5033, Sao Paulo, Brasil Tel.: 32-5161 Telex: 3821123
CLARION (HONG KONG) CO., LTD. 225 Ping Chau Gallery, Ocean Terminal, Kowloon, H.K. Tel.: 3-675785 Telex: HK4922

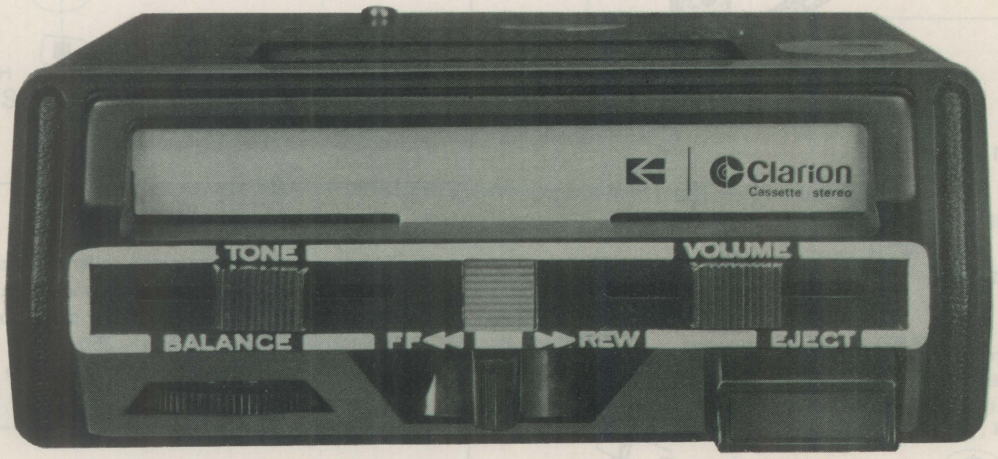

* SPECIFICATIONS

Reproduceion ction:	4track, 2channel, 2program stereo cassette tape player (Monaural tape playable)
Tape speed:	4.75cm/sec (17/8ips)
Wow and flutter:	Better than 0.44%
S/N ratio:	More than 40dB
Cross talk:	More than 30dB (for adjacent channel) More than 40dB (for adjacent track)
Reproduction frequency:	50 to 10,000Hz
F.F and REW time:	Better than 90 sec (C-60)
Power output:	More than 3.5W x 2 (for 10% distortion) More than 5.5W x 2 (for max, volume)
Alarm starting time:	Within 8 sec
Alarm frequency:	400 to 800Hz
Alarm output voltage:	0.5 to 1.5V
Output impedance:	4Ω x 2
Power supply voltage:	D.C 14V (10.8 to 15.6V) Negative ground
Power consumption:	Less than 1.5A (at max, volume)
Dimensions:	With 140m/m Height 55m/m Dept 150m/m
Weight:	1.8kg

Semiconductors:	4ICs, 2transistora and 1 diode	
Audio section	051-0035-00 ~ 04 x 2 (HA-1406)	
	051-0036-01, 02 x 2 (HA-1322)	
Alarm circuit	102-0373-00 (2SC373)	x 2
	0112-00 (IS1588)	

* COMPONENTS VIEW:

	Main unit	1
285-0652-01	Guide label	1
280-3337-01	Owner's guide	1
281-0421-01	Warranty card	1
300-4976-00	Mounting bracket	1

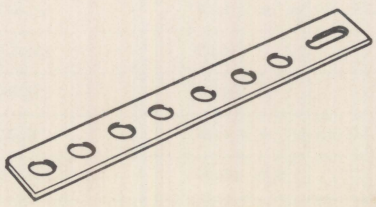

Printed in Japan 298-1788-00

300-5074-00 Mounting bracket 1

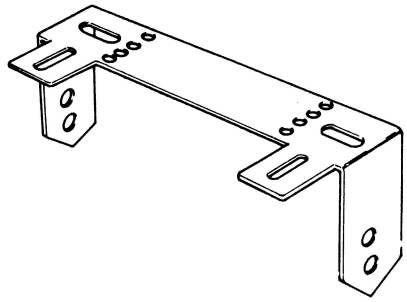

370-2851-01 Escutcheon 1

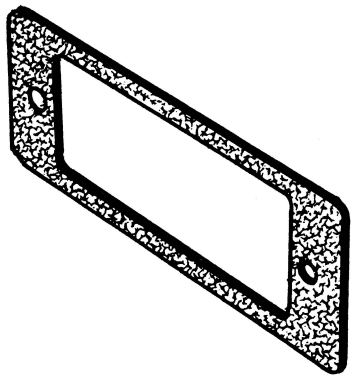

921-5701-01 Parts bag 1

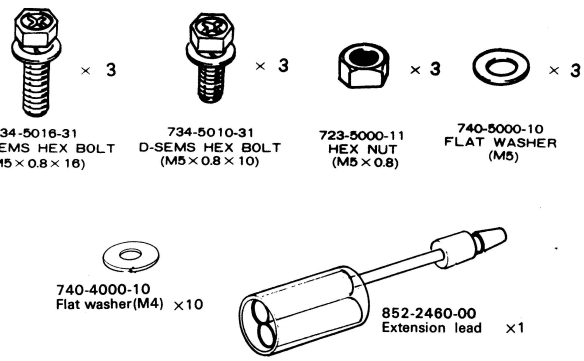

* FEATURES:

o Slot-in System

Slot-in system is employed for inserting cassette tape so that cassette is automatically sucked in when pressed s little.

o FF, REW Mechanism (with lock)

Operation and function has been well taken into consideration in designing this small size car stereo with FF and REW. Moreover, fast forward and rewind operation has been made easy and simple by using lock mechanism.

o Tape End Alarm

When the tape comes to end the tape end alarm operates and indicates it by an alarm tone(approx. 600Hz).

* ADJUSTMENT OF UNIT

1. Adjustment of the head azimuth

The azimuth can be adjusted by playing a test tape of 6.3 kHz-10VU, rotating clockwise or counterclockwise and by altering the inclination angle of the head.
At this time, switch the program and adjust to obtain the minimal azimuth difference between the forward and reverse direction. After adjustment, tighten the adjusting screw by using screw lock paint.

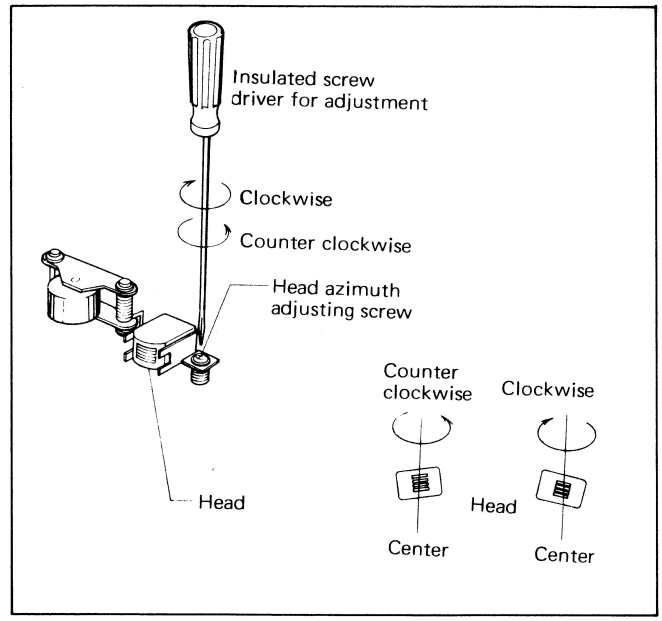

2. Adjustment of pinch roller pressure

Press the center of the pinch roller mounting piece with the tension gauge in the play state and measure the pressure at the moment when the pinch roller parts from the capstan.
The normal pressure is 250g ~ 350g.
If the pressure is not within the tolerance range, replace the pinch roller pressure spring.

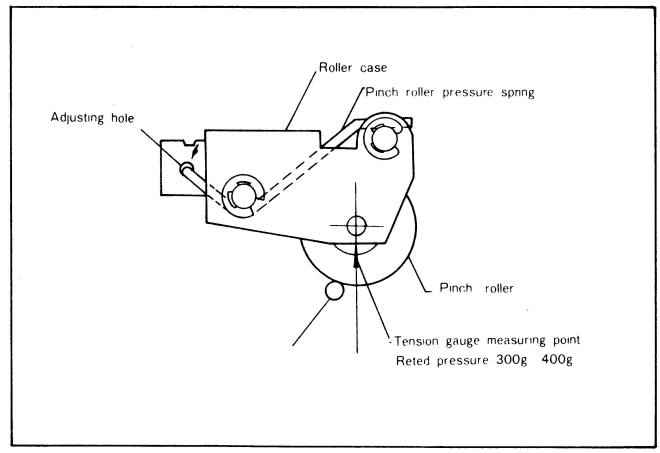

3. Method of replacing the motor

When it is required to replace faulty motor, follow the procedure given below.

3-1 This disconnect the power cord of the motor from the 2P terminal using a soldering iron.

3-2 Remove the 3 screws with which the motor is fixed.

3-3 Remove the fixing screw of the motor pulley and take of the pulley.

[NOTE] After replacing the motor, fix the screws by means of screw lock.

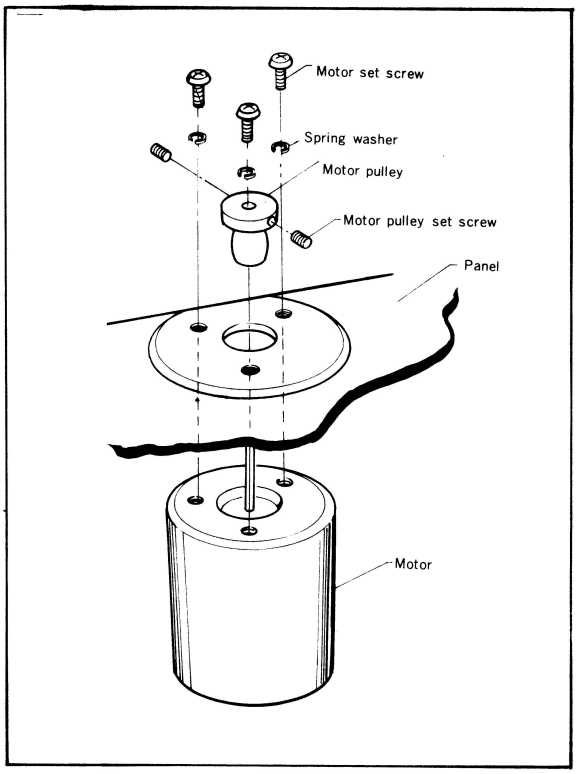

* TROUBLESHOOTING: (Refer to the circuit diagram and printed board diagram)

No sound ➡ Check CP1 voltage (14V normal) ➡
- Abnormal (Power supply circuit) ➡
  - Fuse blown (2A)
  - L_1 (009-0603-00), L_2 (010-1686-00) open
  - SW faulty or mechanism faulty
  - C_{103}, C_{104} short
- Normal ➡ Check CP2 voltage (7.7V normal) ➡
  - Abnormal ➡
    - IC_1, IC_{51} destroyed
    - R_{103} open
    - C_{102}, R_{102} short
    - R_2, R_{52}, C_{101} short
  - Normal
    - (Output circuit) ➡
      - Speaker voice coil open
      - CT_1, CT_2 faulty or soldering faulty
      - C_{15}, C_{65}, C_{17}, C_{67}, C_{16}, C_{66} short
      - IC_2, IC_{52} destroyed
    - (Pre-amp circuit) ➡
      - Head open
      - C_3, C_{53} capacitor down
      - C_{10}, C_{60} capacitor down
      - $IC_1 \sim_2$, $IC_{51} \sim_{52}$ destroyed

Sound volume is low ➡
- R_6 (R_{56}) resistance high
- C_3, C_{53} capacitor down
- C_{10}, C_{60} capacitor down
- $IC_1 \sim_2$, $IC_{51} \sim_{52}$ destroyed

Sound is distorted ➡
- $IC_1 \sim_2$, $IC_{51} \sim_{52}$ faulty
- C_7, C_{67}, C_{104}, C_{18} capacitor down

Set oscillates ➡
- $IC_1 \sim_2$, $IC_{51} \sim_{52}$ faulty
- C_{11}, C_{61} capacitor down
- C_{16}, C_{66} capacitor down

No alarm output ➡ Check CP3 voltage (9.4V normal) ➡
- Abnormal ➡
  - R_{206}, R_{213} blown
  - Q_2, C_{203} short
- Normal ➡ Check CP4 voltage (0V normal) ➡
  - Abnormal ➡ C_{201} short
  - Normal ➡
    - Q_1 short
    - R_{211}, R_{212} blown
    - Q_2 faulty
    - C_{206} blown

Frequency abnormal ➡
- C_{206}, C_{205}, C_{204}
- R_{207}, R_{208} resistance high

Alarm output appears while tape is moving ➡ Check CP4 voltage (0.65V normal) ➡
- Abnormal ➡
  - R_{202}, R_{204}, R_{205} blown
  - R_{203}, D_{201} short
  - C_{201} short or blown
- Normal ➡
  - Q_1 faulty
  - C_{203} capacitor down
  - R_{206} short

* EXPLODED VIEW:

⊙Main section

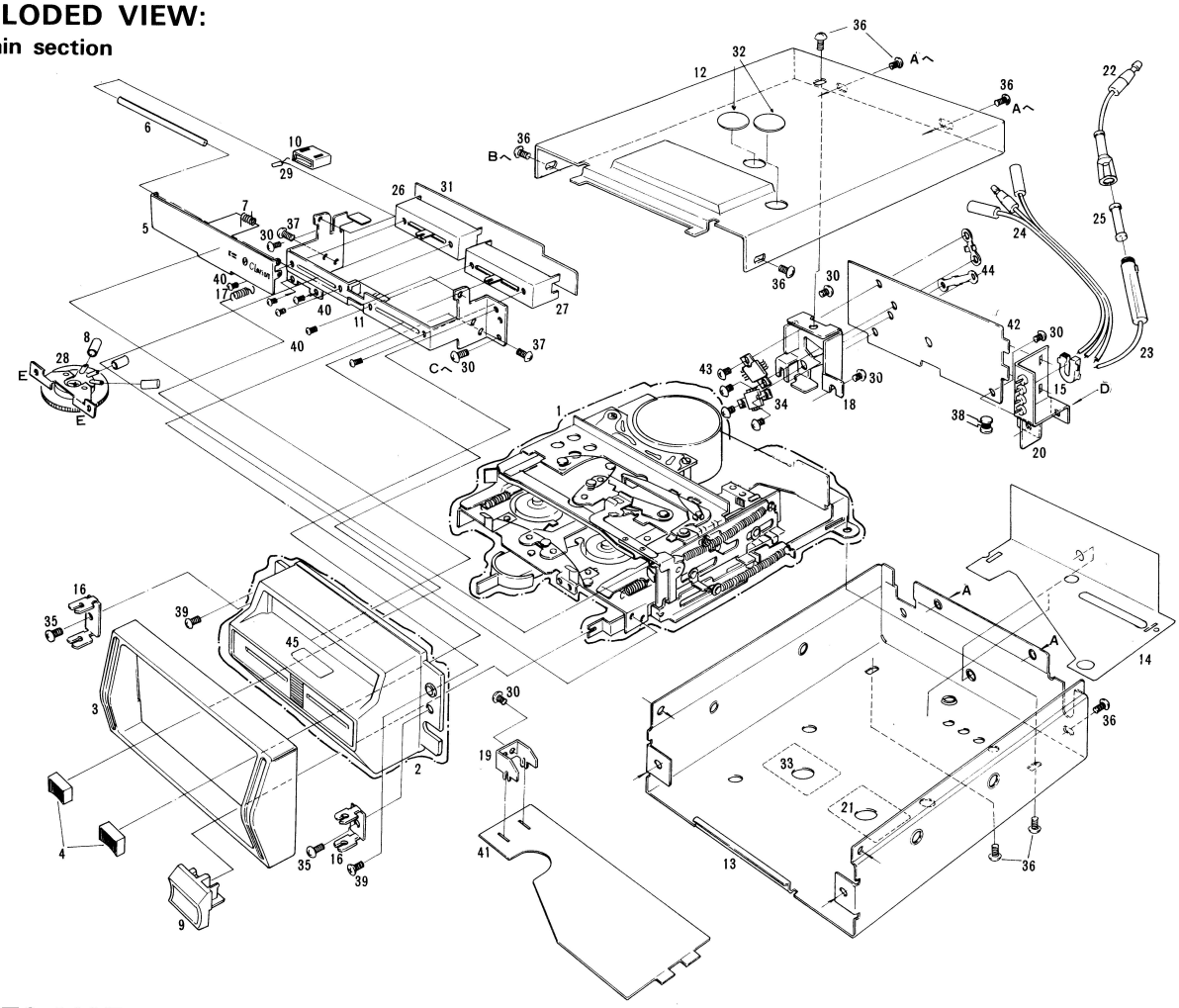

* PARTS LIST:

⊙Main section

REF.NO.	PART NO	DESCRIPTION	P.C.S
1	930-0438-00	Tape mechanism assembly	1
2	940-0024A	Escutcheon assembly	1
3	370-2795-03	Escutcheon	2
4	380-3573-00	Knob	1
5	320-0221-03	Dustproof cover	1
6	341-1117-00	Machined part	1
7	750-1695-00	Spring	3
8	820-4005-02	Vinyl tube	1
9	380-3549-01	Knob	1
10	345-2682-00	Rubber part	1
11	308-0861-00	Front [illegible]er	1
12	310-0786-02	Upper case	1
13	311-0838-00	Lower case	1
14	347-0574-00	Paper part	1
15	335-0580-00	Molded part	1
16	330-4868-02	Pressed part	2
17	750-1522-03	Spring	1
18	313-0908-00	Heat sink	1
19	330-5750-00	Pressed part	1
20	944-0396-01	Filter assembly	1
21	286-3678-00	Set plate	1
22	850-1460-04	A lead	1

REF.NO.	PART NO	DESCRIPTION	P.C.S
23	850-1822-00	A lead	1
24	851-2057-01	Speaker lead	1
25	120-0020-00	Fuse (2A)	1
26	012-3330-00	Variable resistor	1
27	012-3329-00	Variable resistor	1
28	012-3377-00	Variable resistor	1
29	017-0314-08	Pilotlamp	1
30	714-3004-81	Machine screw(M3×4)	6
31	099-4178-00	PWB	1
32	290-2567-00	Label	2
33	285-0656-00	Guide label	1
34	051-0036-00 ~03	IC	2
35	714-4012-11	Machine screw(M4×12)	2
36	714-3003-89	Machine screw(M3×4)	8
37	714-3003-81	Machine screw(M3×3)	2
38	010-1686-00	Coil	1
39	731-3006-40	Tap tight (M3×6)	2
40	714-2004-10	Machine screw(M2×4)	6
41	099-4552-00	PWB	1
42	099-4394-02	PWB	1
43	714-3006-81	Machine screw(M3×6)	4
44	725-0191-00	Plate nut	2

＊MAIN AMP SECTION:

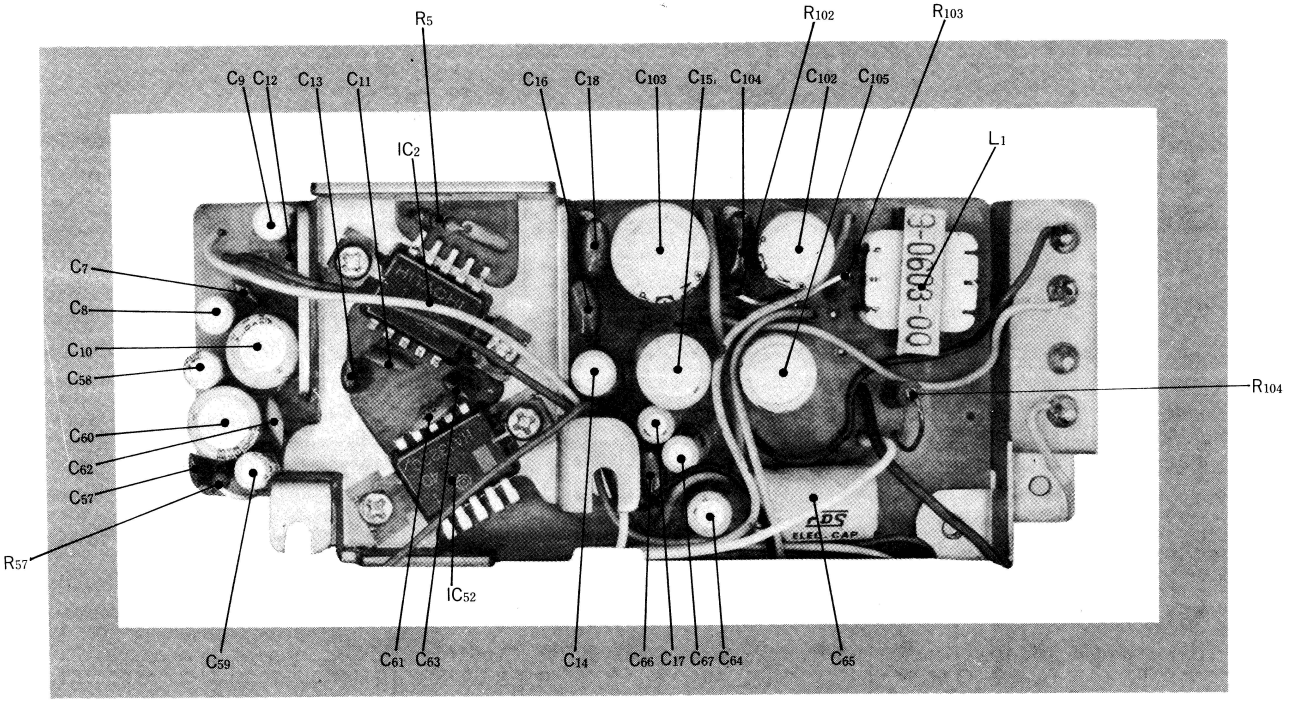

＊PARTS LIST:

⊙Main Amp section

REF.NO.	PART NO	DESCRIPTION	P.C.S
$IC_{2,52}$	051-0036-00 ~03	IC	2
L_1	009-0603-00	Choke	1
$C_{7,57}$	141-1022-11	Polyester capacitor (50V 0.001μF)	2
$C_{8,58}$	180-2254-62	Electrolytic capacitor (50V 2.2μF)	2
$C_{9,59}$	180-2264-22	Electrolytic capacitor (10V 22μF)	2
$C_{10,60}$	042-0158-00	Special capacitor (10V 100μF)	2
$C^{11,12}_{61,62}$	152-3902-13	Ceramic capacitor (39PF CH)	4
$C_{13,63}$	141-4722-11	Polyester capacitor (50V 0.0047μF)	2
$C_{14,64}$	180-4764-22	Electrolytic capacitor (10V 47μF)	2
$C^{102}_{15,65}$	180-3374-22	Electrolytic capacitor (10V 330μF)	3
$C^{16,18}_{66}$	141-3932-13	Polyester capacitor (50V 0.039μF)	3

REF.NO.	PART NO	DESCRIPTION	P.C.S
$C_{17,67}$	180-1054-62	Electrolytic capacitor (50V 1μF)	2
C_{102}	180-4774-22	Electrolytic capacitor (16V 470μF)	1
C_{104}	141-1042-15	Polyester capacitor (50V 0.1μF)	1
C_{105}	180-3374-32	Electrolytic capacitor (16V 470μF)	1
$R_{5,56}$	111-5621-32	Film resistor (¼W5.6KΩ±5%)	2
$R_{7,57}$	111-1211-32	Film resistor (¼W 120Ω±5%)	2
R	111-1211-31	Film resistor (¼W 120Ω±5%)	
R_{102}	111-2221-32	Film resistor (¼W2.2KΩ±5%)	1
R_{103}	111-8211-32	Film resistor (¼W 820Ω±5%)	1
R_{104}	110-1091-42	Solid resistor (½W 1Ω±5%)	1

＊PRE AMP SECTION:

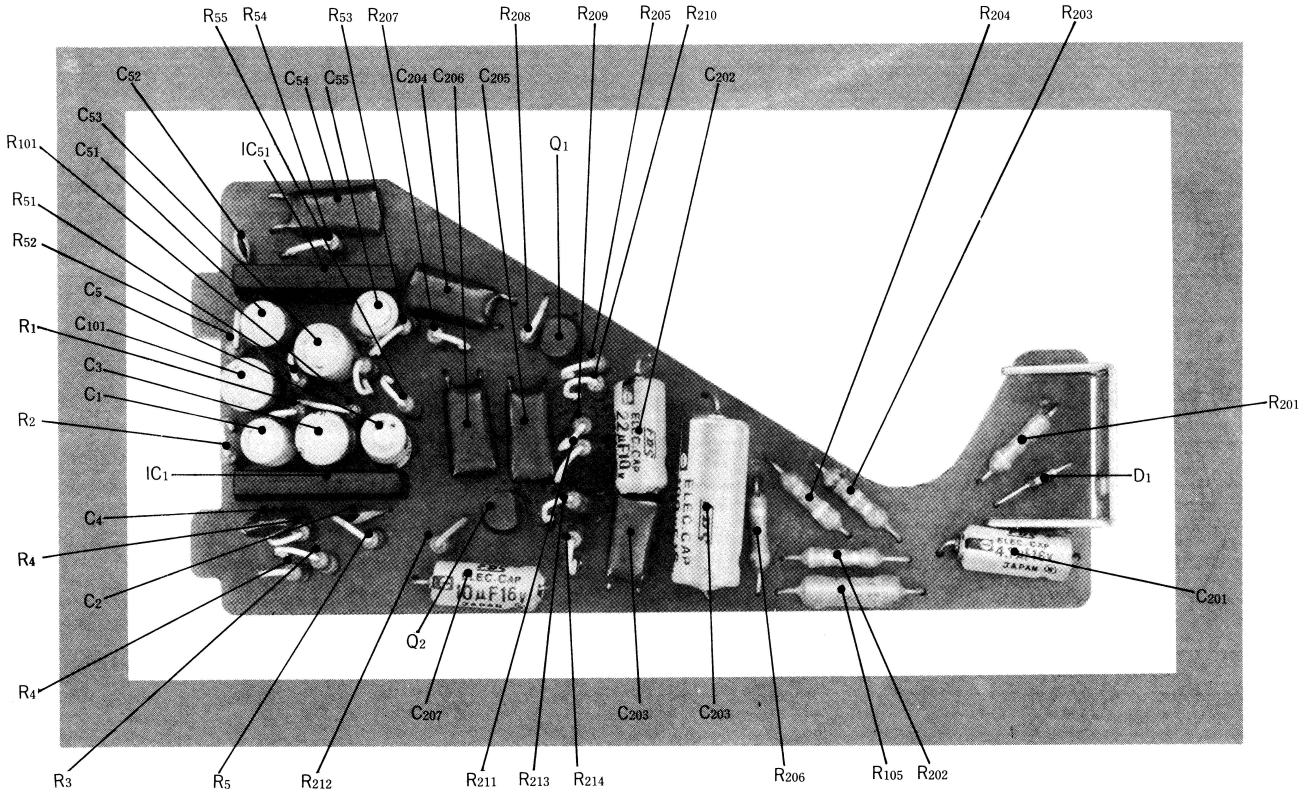

＊PARTS LIST:

⊙Pre Amp section

REF.NO.	PART NO	DESCRIPTION	P.C.S
$IC_{1,51}$	051-0035-00 ~04	IC	2
$Q_{1,2}$	102-0373-00	Transistor (2SC373)	2
D_1	001-0112-00	Diode (1S1588)	1
$C^{1,51,55}_{201}$	180-4754-32	Electrolytic capacitor (16V 4.7μF)	4
$C_{2,52}$	151-4754-13	Ceramic capacitor (10PF CH)	2
$C_{3,53}$	180-3364-22	Electrolytic capacitor (10V 33μF)	2
$C^{4,54,204}_{205,206}$	141-1532-12	Polyester capacitor (50V 0.015μF)	5
C_{202}	180-2264-21	Electrolytic capacitor (10V 22μF)	1
C_{203}	180-1074-31	Electrolytic capacitor (16V 100μF)	2
	180-4754-31	Electrolytic capacitor (16V 4.7μF)	1
C_{201}	180-1064-31	Electrolytic capacitor (16V 10μF)	1
$R_{1,51}$	111-2231-22	Film resistor (1/8W 22KΩ±5%)	2
$R_{2,52}$	111-5631-22	Film resistor (1/8W 56KΩ±5%)	2
$R_{3,53}$	111-8221-22	Film resistor (1/8W8.2KΩ±5%)	2

REF.NO.	PART NO	DESCRIPTION	P.C.S
$R_{4,54}$	111-2241-22	Film resistor (1/8W220KΩ±5%)	2
$R_{5,55}$	111-1031-22	Film resistor (1/8W 10KΩ±5%)	2
R_{105}	114-1512-51	Film resistor (1W150Ω±10%)	1
$R_{201,206}$	111-4721-31	Film resistor (1/4W 4.7KΩ±5%)	2
$R_{202,205}$	111-3331-31	Film resistor (1/4W 33KΩ±5%)	2
R_{203}	111-1241-31	Film resistor (1/4W120KΩ±5%)	1
R_{204}	111-3931-31	Film resistor (1/4W 39KΩ±5%)	1
R	111-3331-22	Film resistor (1/4W 33KΩ±5%)	
$R^{208,213}_{207}$	111-5621-22	Film resistor (1/4W 5.6KΩ±5%)	3
R_{210}	111-1231-22	Film resistor (1/8W 12KΩ±5%)	1
R_{211}	111-1221-22	Film resistor (1/8W 1.2KΩ±5%)	1
R_{212}	111-3321-22	Film resistor (1/8W 3.3KΩ±5%)	1
R_{214}	111-1041-22	Film resistor (1/8W100KΩ±5%)	1

* EXPLODED VIEW:

⊙Mechanism section

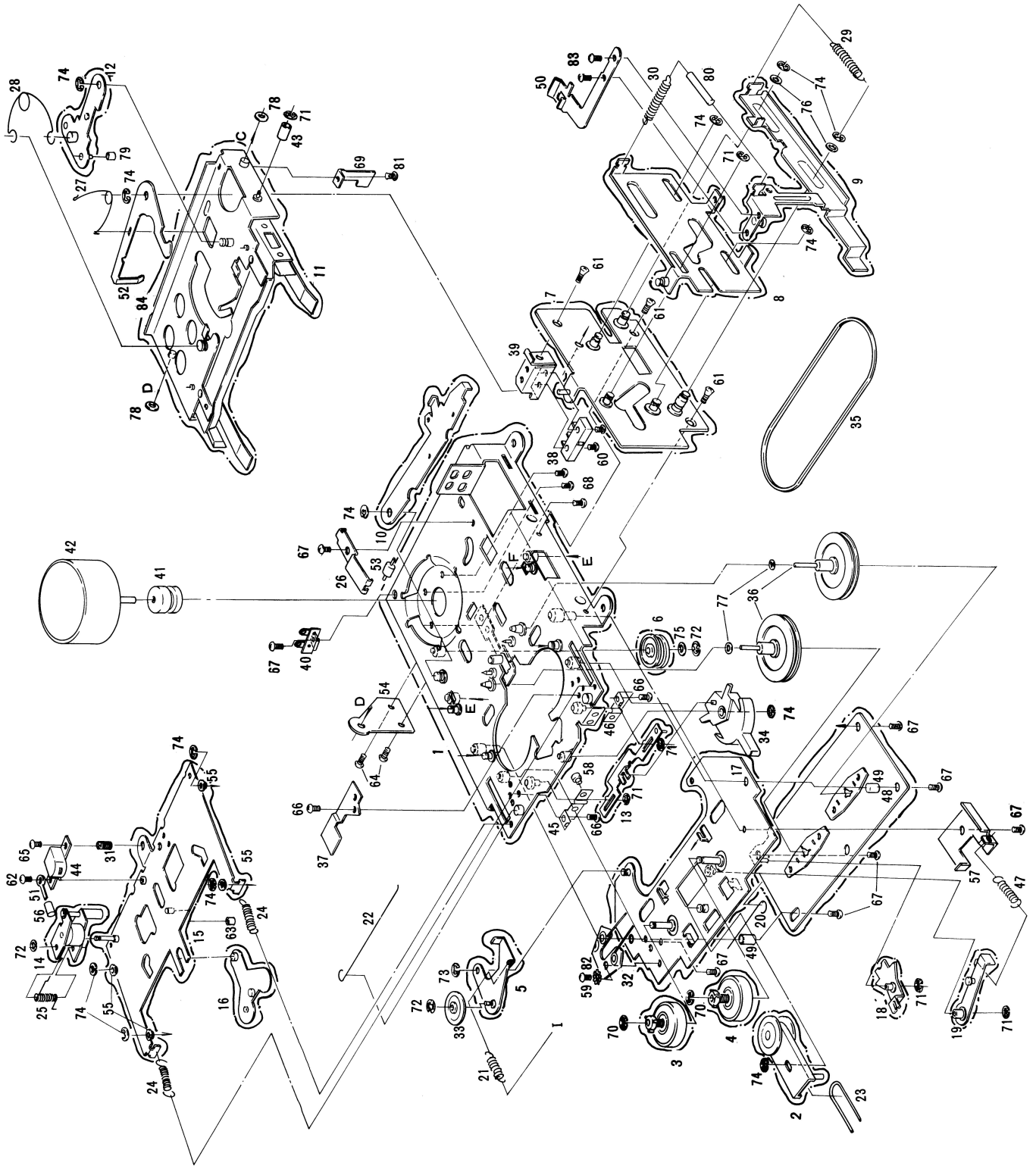

* PARTS LIST:

⊙Mechanism section

REF.NO.	PART NO	DESCRIPTION	P.C.S
1	960-2941-01	Deck plate assembly	1
2	960-2822-01	F.F idler assembly	1
3	960-2824-02	Reel base A assembly	1
4	960-2825-01	Reel base B assembly	1
5	960-2820-02	Plate A assembly	1
6	960-2728-02	Roller assembly	1
7	960-2868-02	Frame B assembly	1
8	960-2867-03	Plate assembly	1
9	960-2831-04	Lever assembly	1
10	960-2823-03	Lever assembly	1
11	960-2828-02	Pack guide assembly	1
12	960-2829-02	Arm assembly	1
13	960-2939-01	Plate assembly	1
14	960-2817-02	Roller A assembly	1
15	960-2894-01	Head plate assembly	1
16	960-2819-03	F.F arm assembly	1
17	960-2940-01	Panel assembly	1
18	960-2938-01	Cam plate assembly	1
19	960-2937-01	Lock arm assembly	1
20	750-1533-00	Spring	1
21	750-1667-00	Spring	1
22	750-1530-02	Spring	1
23	750-1532-00	Spring	1
24	750-1529-00	Spring	2
25	750-1527-00	Spring	1
26	750-1524-01	Spring	1
27	750-1535-00	Spring	1
28	750-1536-01	Spring	1
29	750-1615-01	Spring	1
30	750-1616-01	Spring	1
31	750-1461-00	Spring	1
32	073-0478-00	Terminal	1
33	631-0185-00	Idler	1
34	631-0181-01	F.F lever	1
35	602-0026-02	Belt	1
36	611-0033-01	Flywheel	2
37	630-0757-01	Hold plate	1
38	013-2690-05	Switch	1
39	630-0725-01	Switch plate	1
40	073-0444-00	Terminal	1
41	603-0036-00	Motor pulley	1

REF.NO.	PART NO	DESCRIPTION	P.C.S
42	020-0320-02	DC motor	1
43	610-0061-00	Roller	1
44	011-0242-00	Head	1
45	630-0686-02	Brake A	1
46	630-0687-02	Brake B	1
47	750-1696-01	Spring	1
48	630-0700-03	Flywheel plate	1
49	631-0136-00	Buch	2
50	630-0708-00	Eject arm	1
51	330-4896-00	Pressed part	1
52	630-0706-04	Lock arm	1
53	631-0132-00	Roller	1
54	630-0712-04	Frame C	1
55	631-0133-01	Guide roller	4
56	820-4020-02	Vinyl tube	1
57	630-0895-01	Guide plate	1
58	345-2441-00	Rubber part	2
59	714-2605-81	Machine screw(M2.6×5)	1
60	714-2310-81	Machine screw(M2.3×10)	2
61	714-2605-41	Machine screw(M2.6×5)	3
62	714-2004-81	Machine screw(M2×4)	1
63	631-0154-00	Cap	1
64	714-3005-81	Machine screw(M3×5)	2
65	716-0249-00	Special screw	1
66	714-2003-81	Machine screw(M2×3)	3
67	714-2604-81	Machine screw(M2.6×4)	8
68	732-2604-11	Sems screw(M2.6×4)	3
69	750-1601-00	Spring	1
70	743-1200-10	E-ring	2
71	743-1500-10	E-ring	6
72	743-2000-10	E-ring	3
73	743-2500-10	E-ring	1
74	743-3000-10	E-ring	13
75	746-0625-00	Special washer	1
76	746-0626-00	Special washer	2
77	746-0624-00	Special washer	2
78	746-0629-00	Special washer	2
79	345-2442-00	Rubber part	1
80	820-3015-06	Vinyl tube	1
81	728-2625-88	Rivet	1
82	742-3000-20	Toothed washer	1
83	716-0260-00	Speclal screw	2
84	960-2826-04	Flame A assembly	1

* PRINTED WIRING BOARD:

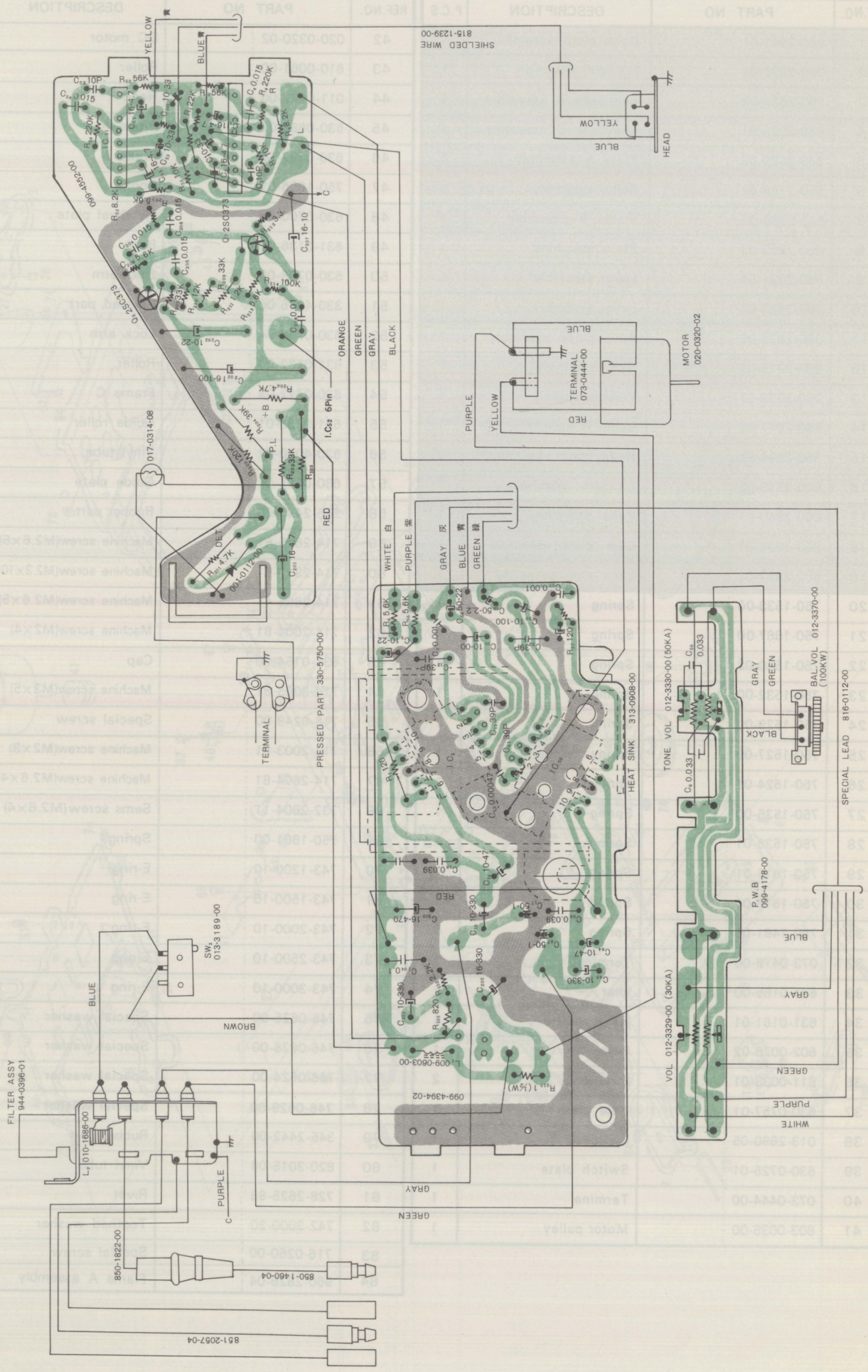

* PRINTED WIRING BOARD:

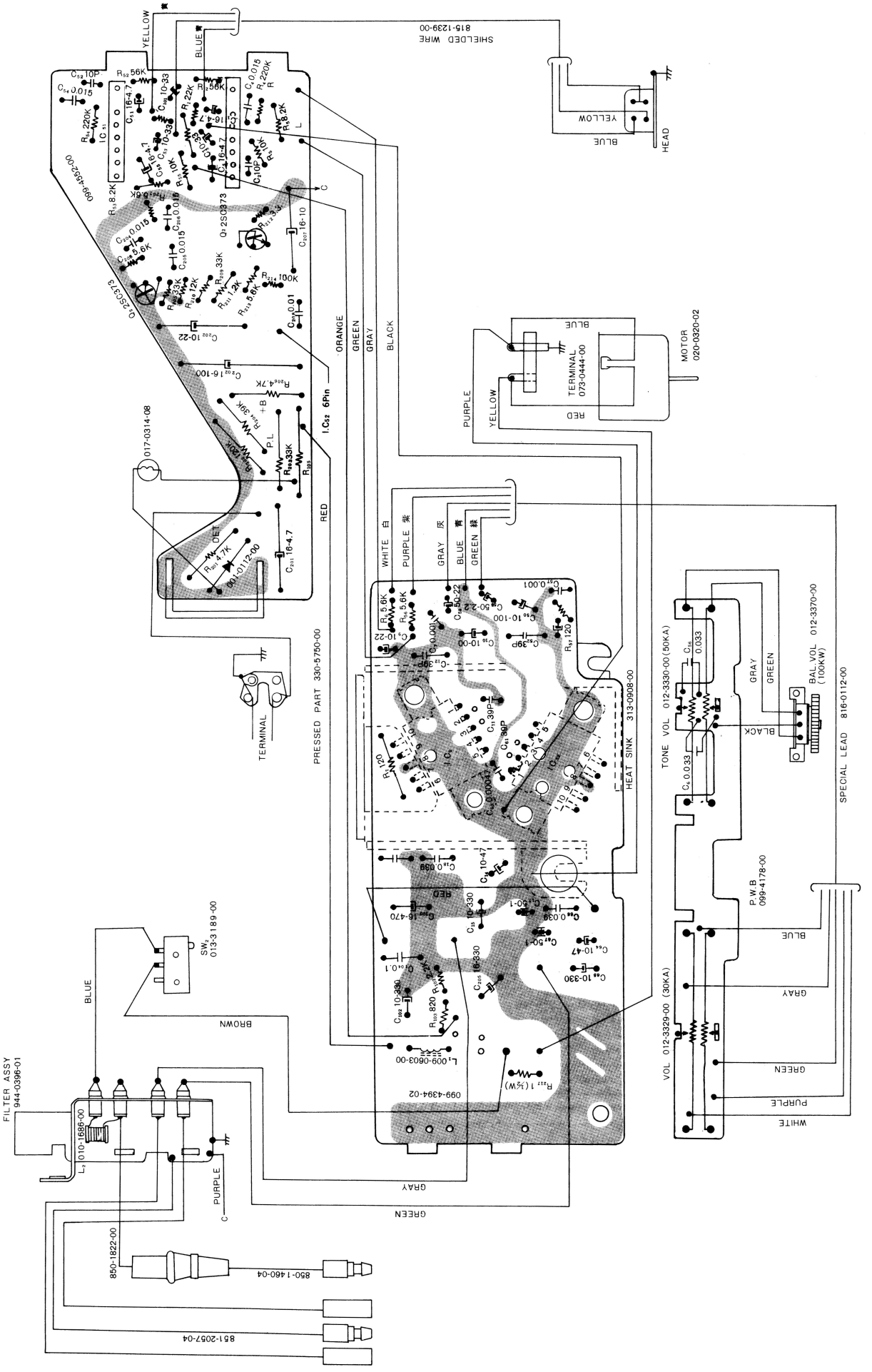

* CIRCUIT DIAGRAM:

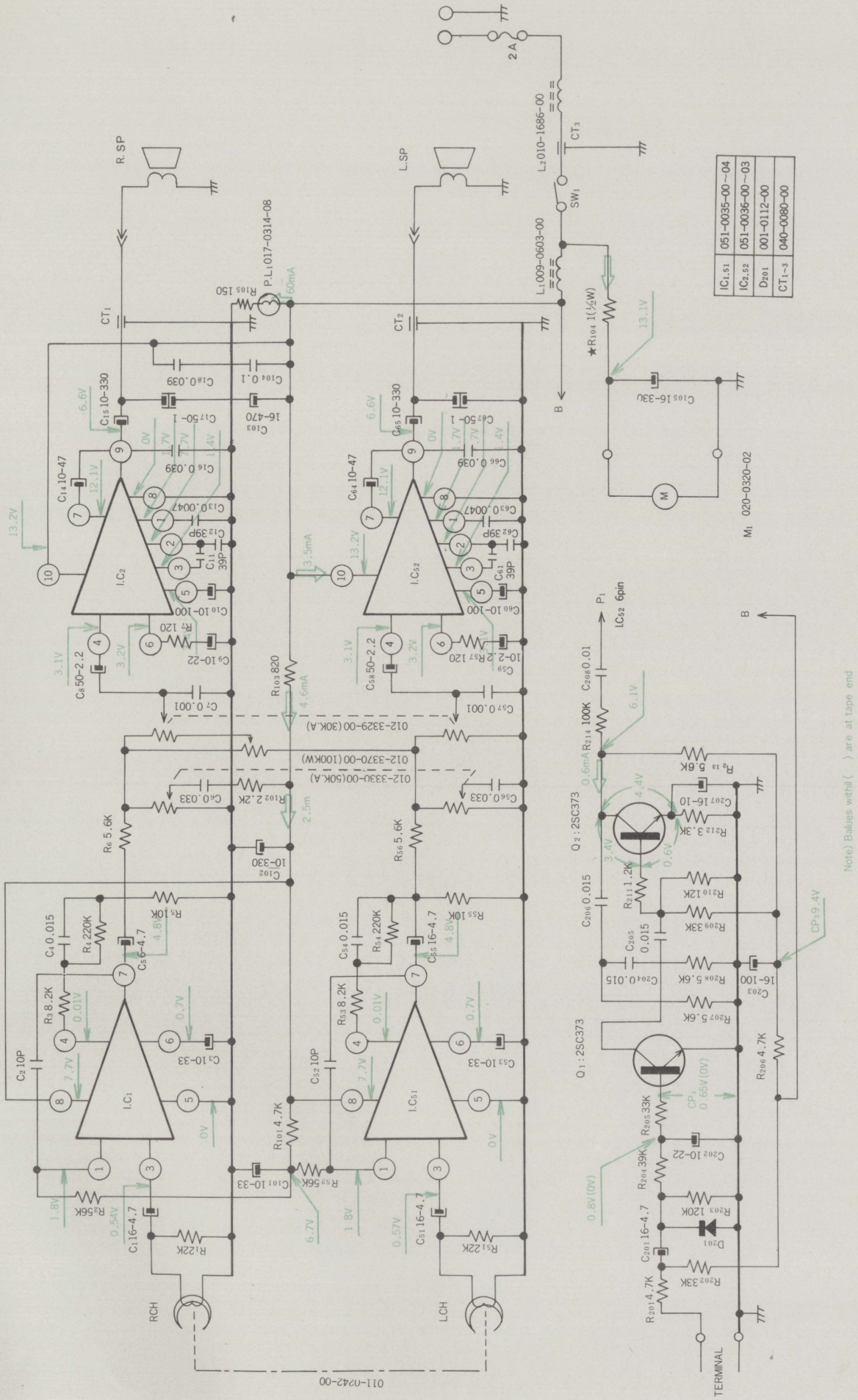
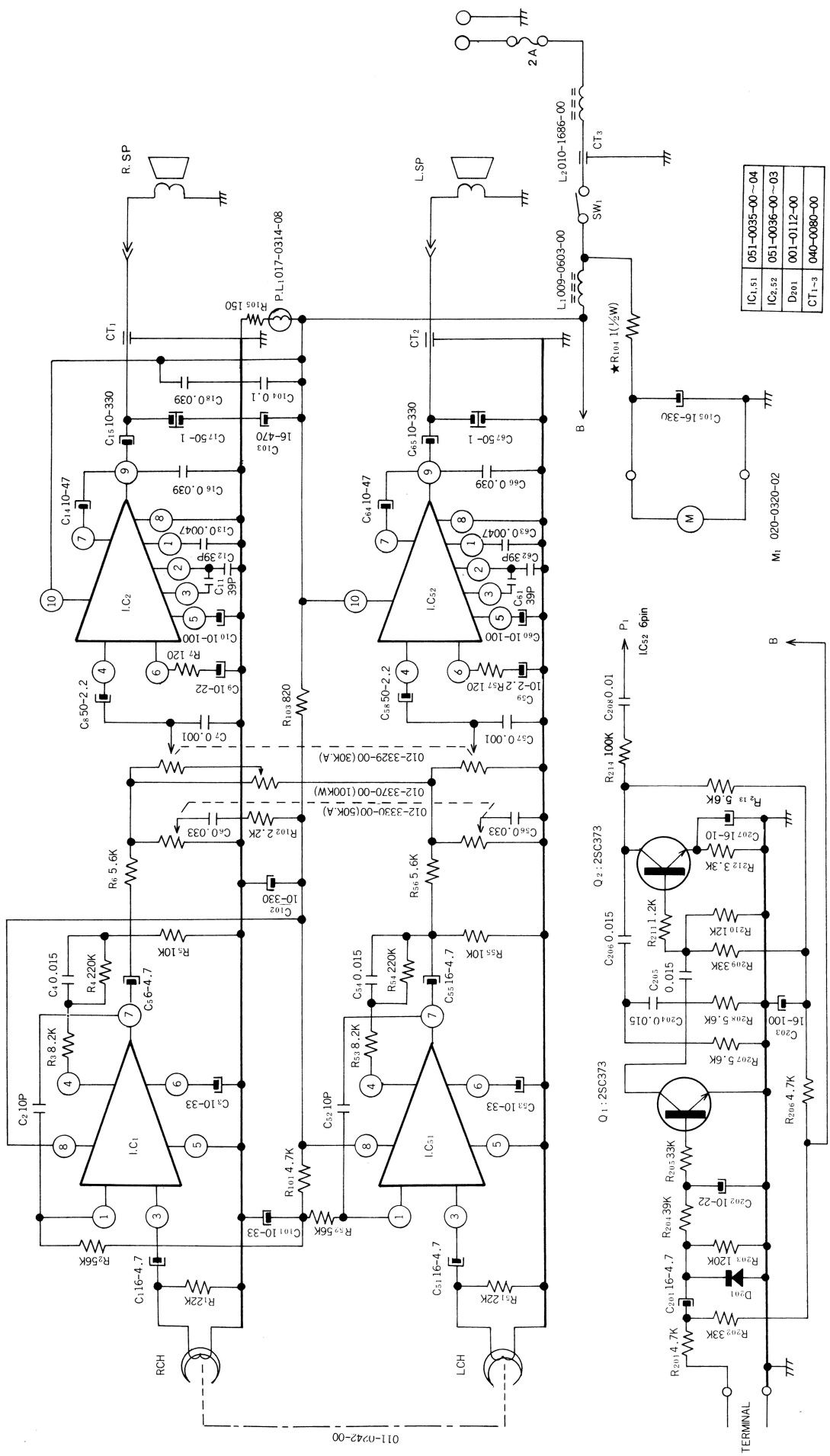
＊CIRCUIT DIAGRAM: