Clarion

Manufacturer
Clarion Co., Ltd.

Export Division
Clarion Shoji Co., Ltd.
3, Kojimachi 5-chome, Chiyoda-ku, Tokyo, 102 Japan
Tel 03-265 2931
Telex J22908, J22152, J25550 CLARISHO

Service Manual

Closer Relations through
"Clarion Service Manual"

Overseas Sales Branch Offices
Clarion Corporation of America 5500 Rosecrans Ave., Lawndale, Calif., 90260 U.S.A. Tel: 213-973-1100 Telex: CLARIONLSA 66-4447
Clarion Shoji (EUROPA) G.m.b.H. Rudolf-Diesel-Strasse 2, 6236 Eschborn 2, West Germany Tel: 06173-61041-42 Telex: 415414
Clarion (HONG KONG) Co., Ltd. 526, Ocean Centre, Canton Road, Tsimshatsui, Kowloon, Hong Kong Tel: 3-690528 Telex: HX64293 CLAHK
Clarion Canada Inc. 1401 Meyerside Dr. Mississauga, Ontario L5T 1G8, Canada Tel: 416-678-1367 Telex: 216968573 CLARION MSGA
Clarion Shoji (U.K.) Ltd. 4-6, Faraday Road, Dorcan Industrial Estate, Dorcan, Swindon, Wiltshire SN3 5HQ United Kingdom Tel: (0793) 24081 Telex 44689

Model PE-593A

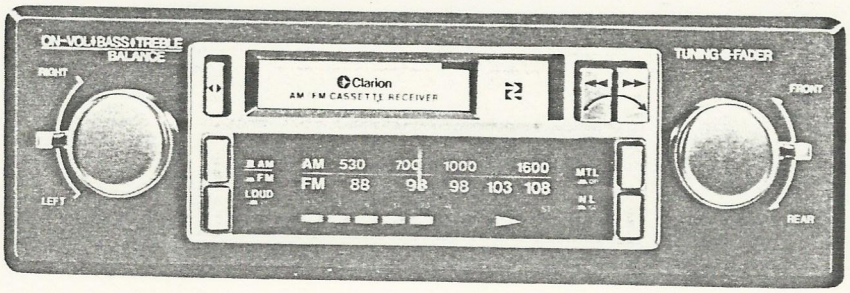

SPECIFICATIONS:

Radio section

Circuit system:	Superheterodyne	
Tuning system:	Manual μ-tuning	
Receive range:	AM	531kHz to 1,605kHz
	FM	88MHz to 108MHz
Intermediate frequency:		
	AM	460kHz
	FM	10.7MHz
Quieting sensitivity:	AM	Less than 30dB (at 20dB S/N)
	FM	Less than 16dB (at 30dB S/N)
Selectivity:	AM	More than 20dB (at ±10kHz detune)
AFC:	FM	650kHz±250kHz
Separation:	FM	More than 20dB
Fidelity: (Bass, treble=flat)	AM 100Hz	−1.5±4dB
	400Hz	0dB
	4,000Hz	−15±7dB
	FM 100Hz	0±4dB
	400Hz	0dB
	7,000Hz	−15±7dB

Tape section

Reproduction system:	4track, 2channel, 2program stereo cassette player
Tape speed:	4.76cm/s (1-⅞ ips)
Wow and flutter:	Less than 0.23% (W.R.M.S)
Separation:	More than 30dB
Cross talk:	More than 40dB
S/N ratio:	More than 40dB
F.F. & REW time:	Less than 120sec. (C-60)

Synthesis

Loudness: (Effective range)	125Hz	+5dB
	6.3kHz	+4dB
Load impedance:	4Ω×2, 4Ω×4	
Power output:	8W×2 (at 10% distortion) 12W×2 (at max. output)	
Power supply voltage:	DC 14.4V (10.8V to 15.6V) Negative ground	
Current consumption:	Less than 5A (at max. output)	
Semiconductors:	7 ICs, 6 transistors and 13 diodes	

Dimensions:

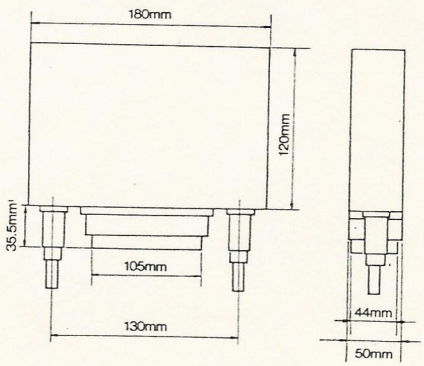

Weight: 1.3 kg

Printed in Japan 298-2820-00 PE-593A

COMPONENT VIEW:

- PE-593A-51

	Main unit	1
300-4976-00	Mounting bracket	1
921-7448-00	Parts bag	1
922-1162-00	Parts bag	1
922-1161-00	Parts bag	1

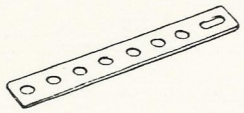


×2
700-5016-10
Tap-screw


×1
725-0181-00
Plate nut


×1
734-5010-31
D-sems hex-bolt


×1
740-5000-10
Flat washer


×4
722-0231-00
Hex. nut


×4
745-0430-01
Flat washer


×2
380-4120-02
Knob (VOL, TUN)


×2
380-3635-02
Knob (FAD,BAL)

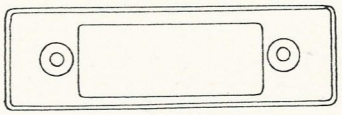
×1
370-3491-00
Escutcheon

FEATURES:

- AM/FM-MPX radio with auto reverse stereo cassette player (with F.F. & REW. lock).
- Loudness circuit built in.
- Hi-power (BTL).
- Metal tape (70μs) EQ.
- SASC (Signal Actuated Stereo Control) circuit system.
- NL (Noise Limiter) circuit.

DIAL CORD STRINGING:

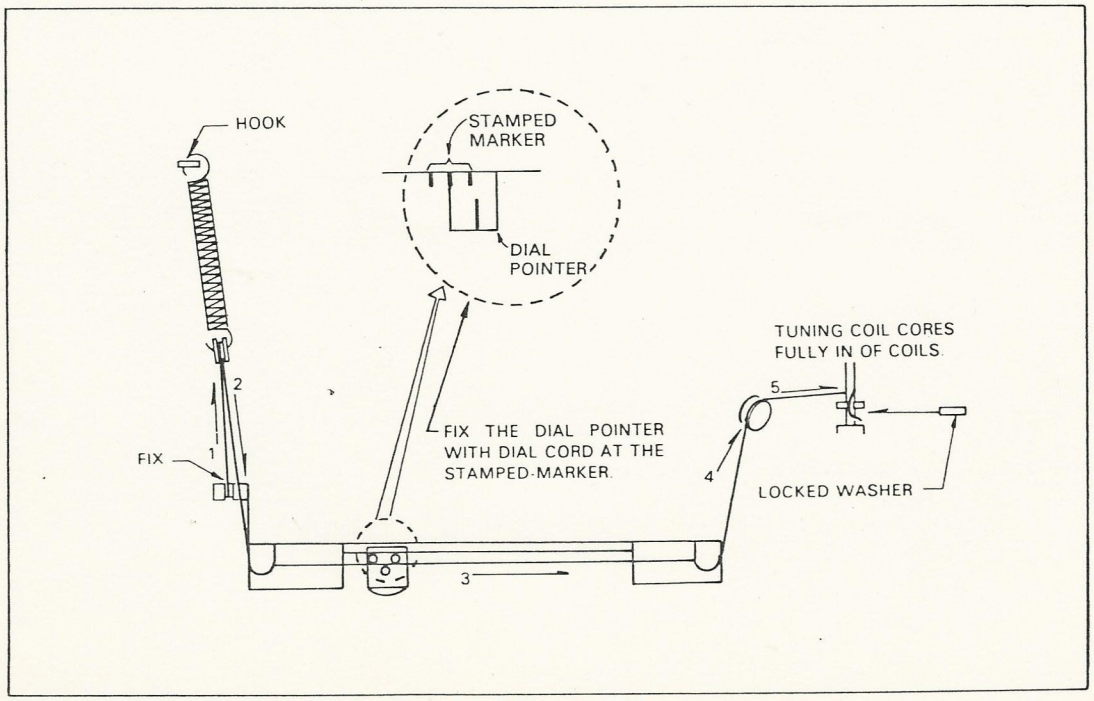

ADJUSTMENTS:

AM CIRCUIT

Item	Input	Frequency	Output	Method of adjustment		Instruments required	Remark
IF	TP1	460kHz	TP2	IFT-2	Adjust for maximum	• Sweep generator • Oscilloscope	VOL minimum TON high BAL center Dial pointer right end
Tracking	Antenna receptacle	1,620kHz	Meter across the speaker voice coil	L-1		• SSG • V.T.V.M • Speaker (4Ω) • Dummy ANT	to SSG (75Ω) 5Ω 15p 65p to ANT receptacle Use dummy antenna between SSG and ANT receptacle
Antenna trimmer	Receive white noise	1,400kHz	Speaker	TC101	Adjust the trimmer so that the noise output becomes maximum	• Speaker	TC101

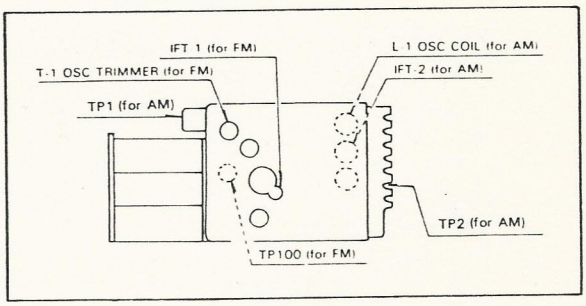

FM CIRCUIT

Item	Input	Frequency	Output	Method of adjustment		Instruments required	Remark
S curve	TP100	10.7MHz	TP101	IFT1 IFT102	Adjust for maximum	• Sweep generator • Oscilloscope • V.T.V.M.	
Tracking	Antenna receptacle	88MHz	Meter across the speaker voice coil.	T-1		• SSG • V.T.V.M. • Speaker (4Ω) • Dummy ANT	
< MPX > (VCO)		98MHz, 55dB No modulation	Connect a frequency counter to TP103 and adjust VR103 to 76kHz			• SSG • Frequency conter	
Separation		98MHz 55dB modulation 100% (Signal 90%, PL 10%)	Meter across the speaker voice coil	VR101	Adjust VR so that left and right separation becomes maximum and the L, R outputs become equal.	• MPX stereo SG • Oscilloscope • V.T.V.M. • S.S.G	
SASC		Set to the specified modulation (30%), assuming an FM SSG output 55dB (98MHz), modulation frequency 7kHz.	Meter across the speaker voice coil.	VR102	Set the output level to 0dBm (=0.775V) using the volume control. Set the FM SSG output to 38dB and adjust VR so that the output level is −3dBm.	• MPX stereo SG • Oscilloscope • V.T.V.M. • Frequency SG	

ADJUSTMENTS:
(TAPE MECHANISM)

1. Head Azimuth Adjustment (See Fig. 1)
   - o Improper head azimuth is one of the causes which give rise to poor sound quality, crosstalk, etc. at the time of playback. If azimuth of the head is not proper, adjust as follows. However, to perform this adjustment, load the test tape and use the adjustment use screwdriver, inserting it through the hole in the lever mechanism (frame ass'y).
     1) Play the test tape (315Hz, −10VU) and adjust the amplifier's volume control and balance control so that the output levels (gains of the playback system) of the left and right channels become equal.
     2) Then play the test tape (8kHz, −10VU) and adjust the head azimuth adjusting screw so that the output level in both the forward and reverse directions of play becomes close to the respective peak (maximum output level) point. Then lock the head azimuth adjusting screw.

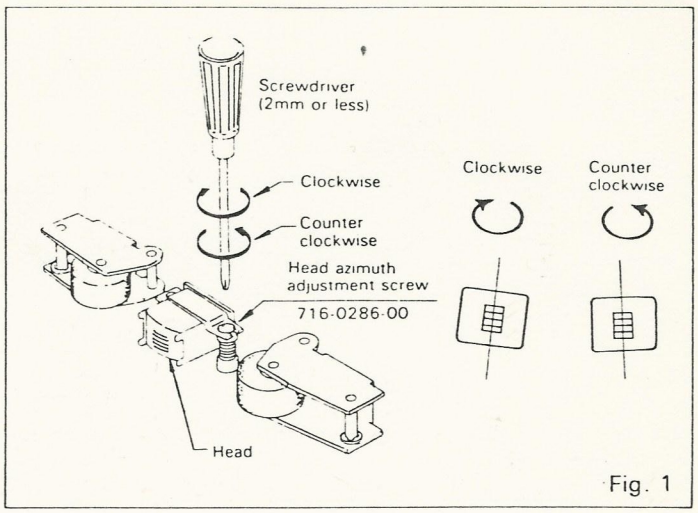

Fig. 1

2. Fast Forward, Rewind Gear Alignment (See Fig. 2)
   - o If the mechanism does not operate properly and abnormal sound (gear noise) is produced at the time of fast forward and rewind, first of all check whether the sound is produced during fast forward (FF) or rewinding (REW). If it is produced during FF, adjust by bending the claw (A) to the left or right with radio pliers, etc., and if it is produced during REW, adjust by bending the claw (B) in the same manner. Adjust so that the clearance at this time between the flywheel and FF. REW gear becomes about 0.1 to 0.2mm.
     1) If the gear engagement is loose and the gears produce a large noise, bend the claw away from the center line.
     2) If the gear engagement is too hard and there is no clearance between the gears, bend the claw toward the center line.

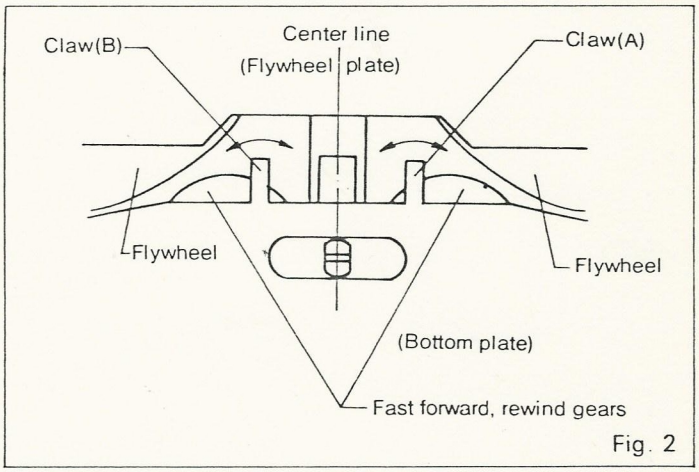

Fig. 2

3. **Adjustment of Power Switch** (See Fig. 3)

o If power does not turn on when pack is inserted (loaded), or if power does not turn off after ejecting the pack, and the underlying cause is found to be misadjustment of the power switch, adjust the switch at proper position by bending upward or downward the adjusting claw of the guide arm ass'y by means of radio pliers, etc. However, make sure that at the time of ejecting there is a clearance of at least 0.2mm to 0.3mm between the body of the switch and the switch lever.

1) If power does not turn on when loading pack, adjust by bending the adjusting claw downward.

2) If power does not turn off when ejecting pack, adjust by bending the adjusting claw upward.

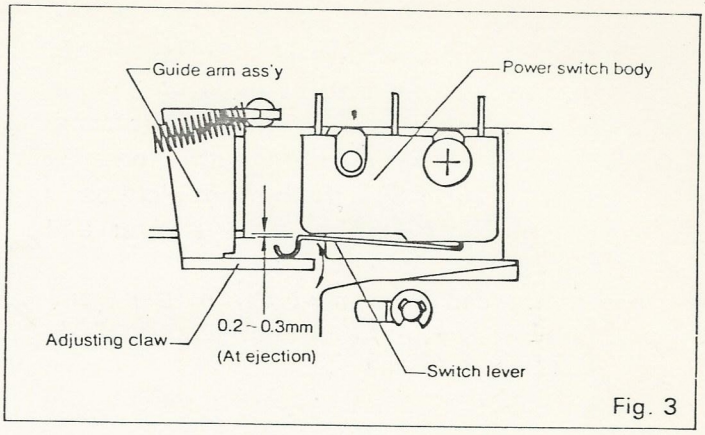

Fig. 3

MOUNTING, DISMOUNTING

1. **Eject, Lever Mechanism** (See Fig. 4)

For dismounting, first of all fully push the pack stopper to the side opposite to the pack insert port. After that drop the pack guide by pushing the end of the off arm in the same direction (pack load state). Then remove the E-ring (743-1500-10) shown in the figure, the eject rod (750-2152-01) and the spring (750-2150-00).

Now the lever mechanism and then the eject mechanism can be removed by removing the two machine screws (714-2604-81) with which the lever mechanism (frame ass'y) is fixed at the front and rear. After that the head and the roller ass'y (pinch roller) can be removed and replaced. (See Fig. 5)

These parts can be easily mounted following the procedure just reverse of that used for dismounting them. However, the following two cautions must be observed at this time. First. make sure that the roller A (610-0101-00) and roller (610-0080-00) shown in the figure are not dismount and secondly, carefully check the insert places shown in the figure.

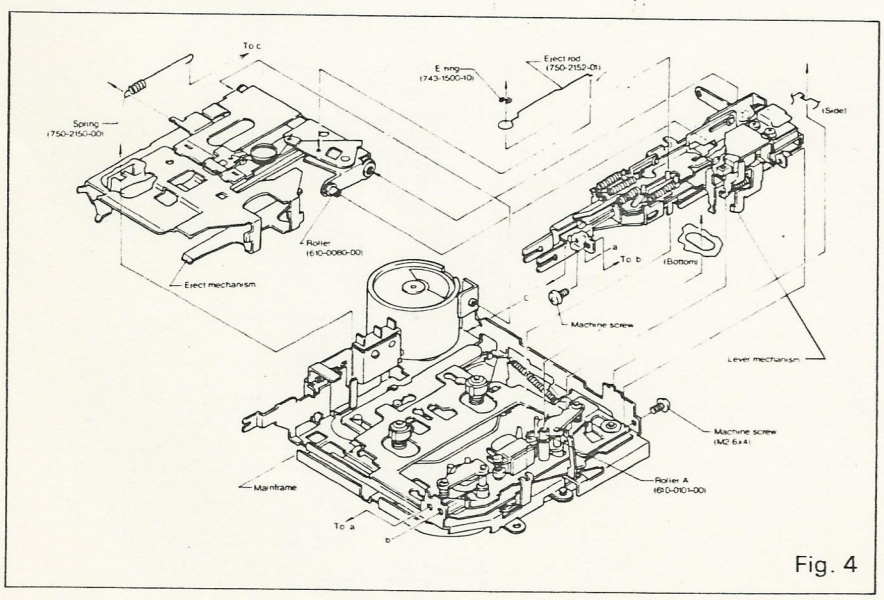

Fig. 4

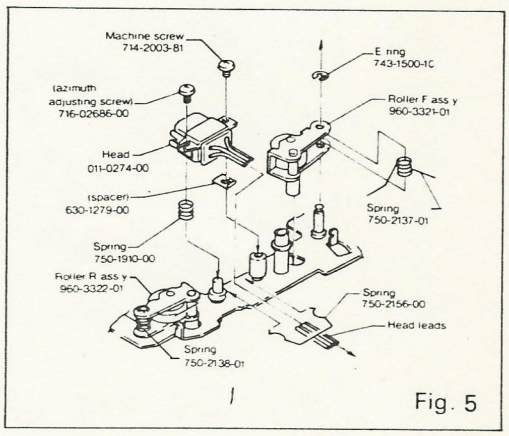

Fig. 5

2. Drive Section (See Fig. 6)

The flywheel plate can be removed by removing the machines screws (714-2604-81) located at the three places shown in the figure. Now the longer belt (belt A) can be replaced. By further removing another the machine screw (714-2604-81), the bottom plate ass'y can be removed, and now the shorter belt (belt B) can also be replaced.

The motor can be removed from the mainframe by removing the two screws (732-2604-11) and the reel base can be removed from the bottom plate ass'y by removing the special washer (746-0628-01).

As for precautions to be observed at the time of mounting, first, when installing the belt, make sure that oil and dirt, etc. do not adhere to the belt and that the belt does not get twisted and secondly, when mounting the bottom plate ass'y or the flywheel plate, carefully check insert places because there are many of them.

* Refer to Fig. 4 for the mounting position of the motor.

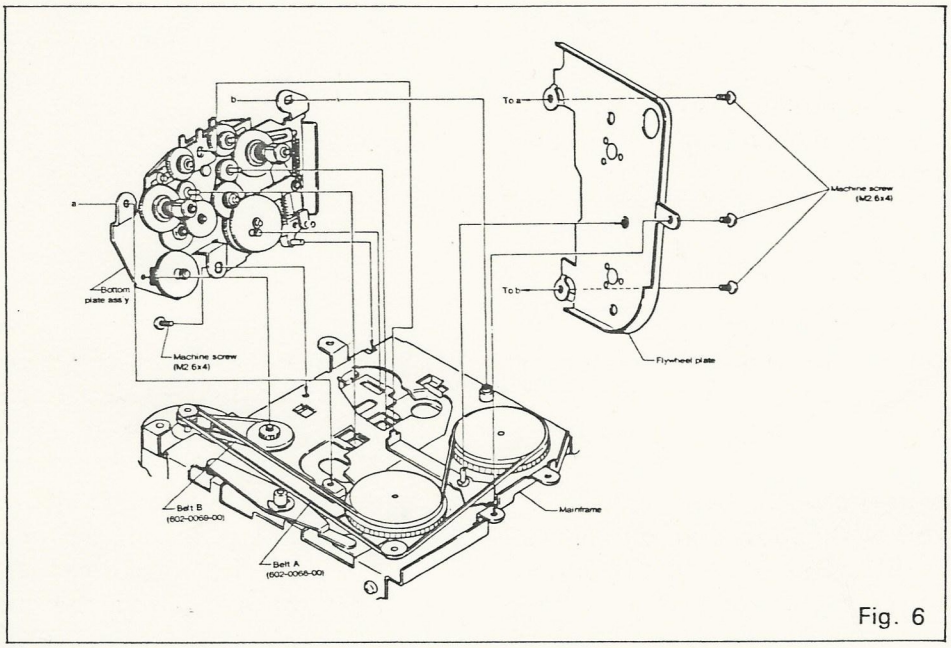

Fig. 6

EXPLANATION OF IC's:

FM-IF AMP IC
051-0122-00 TA7303P

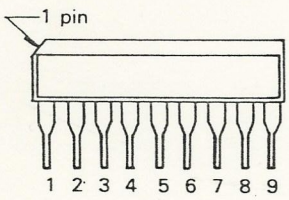

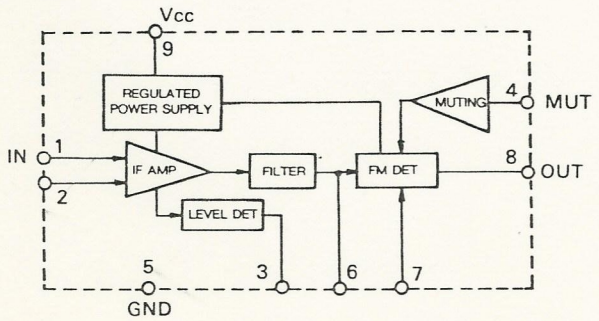

FM NOISE CANCELLER IC
051-0407-00 LA2110

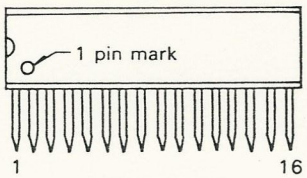

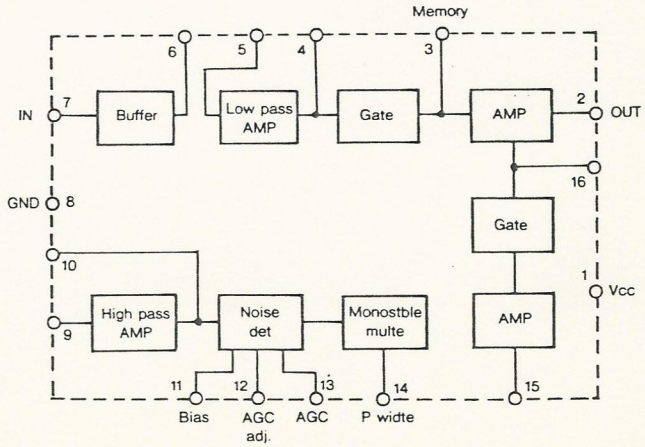

FM-MPX IC
051-0408-00 LA3375

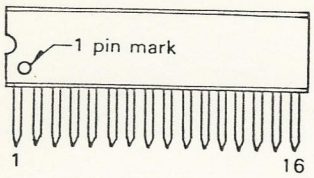

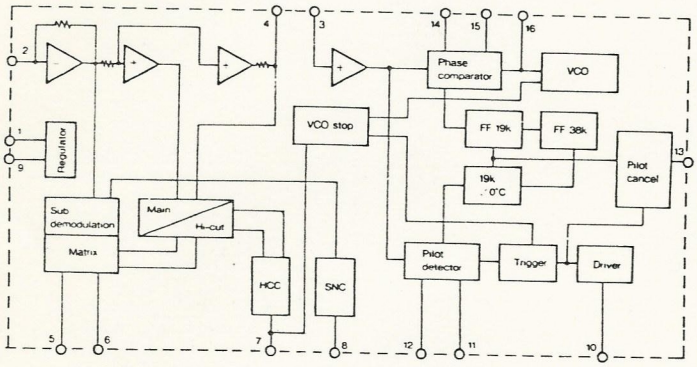

PRE AMP IC
051-0301-00 M51522L

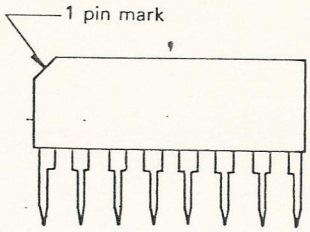

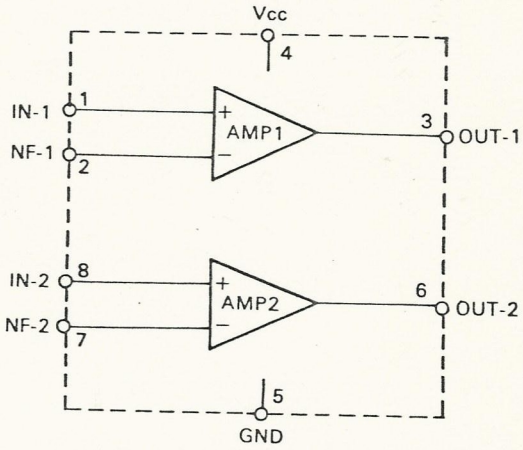

LED DRIVER
051-0382-00 TA7654P

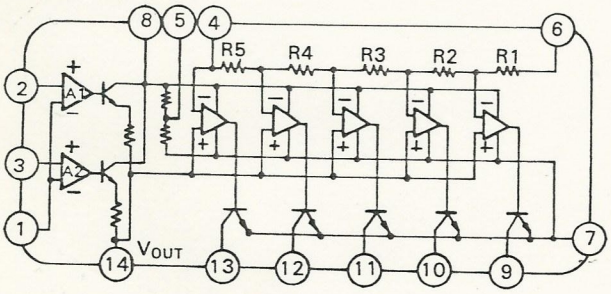

AUDIO POWER AMP.
051-0458-00 LA4460
051-0459-00 LA4461

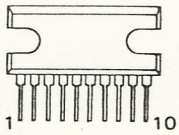

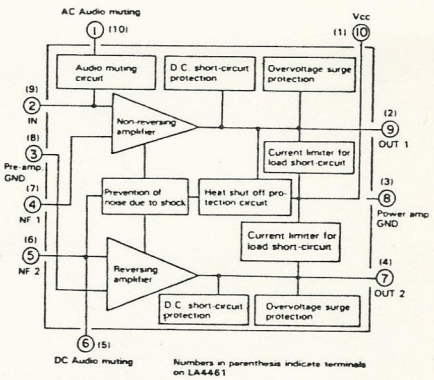

Note: The pins on LA4461 are all in reverse order.

■PARTS LIST:

◎Electrical section

◎MAIN, CONTROL P.W.B

REF.NO.	PART NO. (ORDER NO.)	DESCRIPTION	Q'TY
D_{106}	001-0110-90	Diode (1S2473T77)	1
$D_{201,301,401,402}$	001-0151-00	Diode (1S953)	4
D_{104}	001-0276-01	Diode (S5277GLC5)	1
$D_{101,102}$	001-0294-90	Diode (1SS133T77)	2
D_{103}	001-0322-45	Diode (0.5Z9.1X)	1

REF.NO.	PART NO. (ORDER NO.)	DESCRIPTION	Q'TY
TC_{101}	004-1531-00	Trimmer	1
IFT_{101}	005-0724-00	IF-transformer	1
IFT_{102}	005-0804-00	IF-transformer	1
L_{103}	009-0626-00	Choke	1
L_{101}	010-0490-02	Coil	1

REF.NO.	PART NO. (ORDER NO.)	DESCRIPTION	Q'TY
L_{102}	010-1180-00	Coil	1
VR_{101}	012-3708-05	Variable resistor (10kΩ)	1
VR_{103}	012-3808-06	Variable resistor (10kΩ)	1
VR_{102}	012-3808-08	Variable resistor (33kΩ)	1
PL_{101}	017-0321-01	Pilot lamp	1
IC_{101}	051-0122-00	IC (TA7303)	1
IC_{201}	051-0301-00	IC (M51522L)	1
IC_{204}	051-0382-00	IC (TA7654P)	1
IC_{102}	051-0407-00	IC (LA2110)	1
IC_{103}	051-0408-00	IC (LA3375)	1
IC_{203}	051-0458-00	IC (LA4460)	1
IC_{204}	051-0459-00	IC (LA4461)	1
$Q^{201,202,301,302}_{401}$	102-1815-28	Transistor (2SC1815GR)	5
Q_{101}	102-2201-12	Transistor (2SC2001L)	1
$R_{105,142,504}$	111-1001-21	Film resistor (¼Ws10Ω)	3
$R^{505,506,507,508}_{509,x3}$	111-1021-21	Film resistor (¼Ws1kΩ)	6
R_{313}	111-1021-22	Film resistor (¼Ws1kΩ)	1
$R^{112,125,129,141}_{213,229,x2}$	111-1021-71	Film resistor (⅙W1kΩ)	7
$R_{138,304}$	111-1031-21	Film resistor (¼Ws10kΩ)	2
$R_{315,316}$	111-1031-22	Film resistor (¼Ws10kΩ)	2
$R^{107,204,215,216}_{503,512,514}$	111-1031-71	Film resistor (⅙W10kΩ)	7
$R^{101,113,114,132}_{206,207,306,307}$	111-1041-71	Film resistor (⅙W100kΩ)	8
R_{116}	111-1211-21	Film resistor (¼Ws120Ω)	1
$R_{133,223,323}$	111-1231-71	Film resistor (⅙W12kΩ)	3
$R_{319,x1}$	111-1521-21	Film resistor (¼Ws1.5kΩ)	2
$R_{221,321}$	111-1521-22	Film resistor (¼Ws1.5kΩ)	2
$R_{219,224,324}$	111-1521-71	Film resistor (⅙W1.5kΩ)	3
R_{515}	111-1531-71	Film resistor (⅙W15kΩ)	1
$R_{202,302}$	111-1831-71	Film resistor (⅙W18kΩ)	2
$R_{201,301}$	111-2211-71	Film resistor (⅙W220Ω)	2
R_{322}	111-2221-21	Film resistor (¼Ws2.2kΩ)	1
$R^{108,109,121,130}_{211,222,311}$	111-2221-71	Film resistor (⅙W2.2kΩ)	7
$R^{111,123,124,208}_{308}$	111-2231-71	Film resistor (⅙W22kΩ)	5
R_{106}	111-2241-21	Film resistor (¼Ws220kΩ)	1
$R_{103,225,325}$	111-2711-71	Film resistor (⅙W270Ω)	3
R_{110}	111-2721-71	Film resistor (⅙W2.7kΩ)	1
R_{139}	111-2731-21	Film resistor (¼Ws27kΩ)	1
R_{137}	111-2731-71	Film resistor (⅙W27kΩ)	1
$R_{218,318}$	111-3321-22	Film resistor (¼Ws3.3kΩ)	2
$R^{126,127,134,135}_{220,320}$	111-3321-71	Film resistor (⅙W3.3kΩ)	6
$R_{402,403}$	111-3331-22	Film resistor (¼Ws33kΩ)	2
R_{131}	111-3331-71	Film resistor (⅙W33kΩ)	1
$R_{217,317}$	111-3341-22	Film resistor (¼Ws330kΩ)	2
$R_{128,136,501,510}$	111-3631-71	Film resistor (⅙W36kΩ)	4
R_{126}	111-3921-71	Film resistor (⅙W3.9kΩ)	1
$R_{102,209,309}$	111-3941-71	Film resistor (⅙W390kΩ)	3
$R_{203,303}$	111-4341-71	Film resistor (⅙W430kΩ)	2
R_{312}	111-4721-22	Film resistor (¼Ws4.7kΩ)	1
$R^{117,118,119}_{212,502,511}$	111-4721-71	Film resistor (⅙W4.7kΩ)	6
R_{513}	111-4731-71	Film resistor (⅙W47kΩ)	1
$R_{226,227,326,327}$	111-4791-21	Film resistor (¼Ws4.7Ω)	4
R_{140}	111-5601-21	Film resistor (¼Ws56Ω)	1

REF.NO.	PART NO. (ORDER NO.)	DESCRIPTION	Q'TY
R_{104}	111-5601-71	Film resistor (⅙W56Ω)	1
$R_{205,305}$	111-5621-71	Film resistor (⅙W5.6kΩ)	2
$R_{401,404}$	111-5631-22	Film resistor (¼Ws56kΩ)	2
R_{314}	111-6821-22	Film resistor (¼Ws6.8kΩ)	1
$R_{115,214}$	111-6821-71	Film resistor (⅙W6.8kΩ)	2
$R_{210,310}$	111-8201-71	Film resistor (⅙W82Ω)	2
R_{122}	111-8221-71	Film resistor (⅙W8.2kΩ)	1
R_{228}	114-2291-51	Film resistor (1W2.2Ω)	1
$C_{101,144,220,320}$	141-1032-10	Polyester capacitor (50V0.01μF)	4
$C_{222,322}$	141-1042-10	Polyester capacitor (50V0.1μF)	2
$C_{217,317}$	141-5622-10	Polyester capacitor (50V0.0056μF)	2
C_{122}	173-5632-10	Polyester capacitor (50V0.056μF)	1
$C_{137,142,204,304}$	173-8222-10	Polyester capacitor (50V0.0082μF)	4
C_{125}	160-1222-05	Ceramic capacitor (1200pFB)	1
$C_{111,112,113,114}$	160-2712-05	Ceramic capacitor (270pFB)	4
C_{110}	160-3912-05	Ceramic capacitor (390pFB)	1
$C_{123,124}$	160-6812-05	Ceramic capacitor (680pFB)	2
C_{130}	160-8212-05	Ceramic capacitor (820pFB)	1
$C_{202,302}$	171-1023-06	Ceramic capacitor (25V0.001μF)	2
$C^{103,106,107,115}_{118,121,131,132}$ $_{206,306}$	171-1033-06	Ceramic capacitor (25V0.01μF)	10
$C_{136,141,205,305}$	171-1533-06	Ceramic capacitor (25V0.015μF)	4
C_{119}	171-2223-06	Ceramic capacitor (25V0.0022μF)	1
$C_{210,212,310,312}$	171-2233-06	Ceramic capacitor (25V0.022μF)	4
$C_{128,215,315}$	171-3323-06	Ceramic capacitor (25V0.0033μF)	3
C_{138}	171-3333-06	Ceramic capacitor (25V0.033μF)	1
$C_{117,127,211,311}$	171-6823-06	Ceramic capacitor (25V0.0068μF)	4
C_{104}	174-1009-13	Ceramic capacitor (10pFCH)	1
C_{126}	174-6809-13	Ceramic capacitor (68pFCH)	1
$C^{223,224,225,323}_{324,325}$	043-0122-00	Ceramic capacitor (12V0.3μF)	6
C_{140}	043-0171-00	Ceramic capacitor (1000pF)	1
$C^{135,139,201,301}_{501,505}$	179-1053-62	Electrolytic capacitor (50V1μF)	6
$C_{143,214,308,314}$	179-1063-32	Electrolytic capacitor (16V10μF)	4
$C_{120,504}$	179-1073-33	Electrolytic capacitor (16V100μF)	2
C_{133}	179-2253-62	Electrolytic capacitor (50V2.2μF)	1
$C_{146,147}$	179-2273-23	Electrolytic capacitor (10V220μF)	2
$C_{x2,x3}$	179-2273-33	Electrolytic capacitor (16V220μF)	2
C_{x4}	179-2283-33	Electrolytic capacitor (16V2200μF)	1
C_{148}	179-3363-32	Electrolytic capacitor (16V33μF)	1
C_{x1}	179-3373-33	Electrolytic capacitor (16V330μF)	1
C_{134}	179-4743-62	Electrolytic capacitor (50V0.47μF)	1
$C_{129,502,506}$	179-4753-62	Electrolytic capacitor (50V4.7μF)	3
C_{226}	179-4773-33	Electrolytic capacitor (16V470μF)	1
C_{145}	180-1054-62	Electrolytic capacitor (50V1μF)	1
$C_{207,307}$	180-4744-62	Electrolytic capacitor (50V0.47μF)	2
$C^{105,209,218,309}_{318,401,402}$	182-1053-62	Electrolytic capacitor (50V1μF)	7
$C_{208,213,313}$	182-1063-32	Electrolytic capacitor (16V10μF)	3
$C_{108,503}$	182-1063-42	Electrolytic capacitor (25V10μF)	2
$C_{219,221,319,321}$	182-1073-12	Electrolytic capacitor (6.3V100μF)	4
$C_{216,316}$	182-2243-62	Electrolytic capacitor (50V0.22μF)	2
$C_{116,203,303}$	182-2263-32	Electrolytic capacitor (16V22μF)	3
C_{109}	182-4743-62	Electrolytic capacitor (50V0.47μF)	1
C_{507}	182-4753-52	Electrolytic capacitor (35V4.7μF)	1

EXPLODED VIEW:

◎Main section

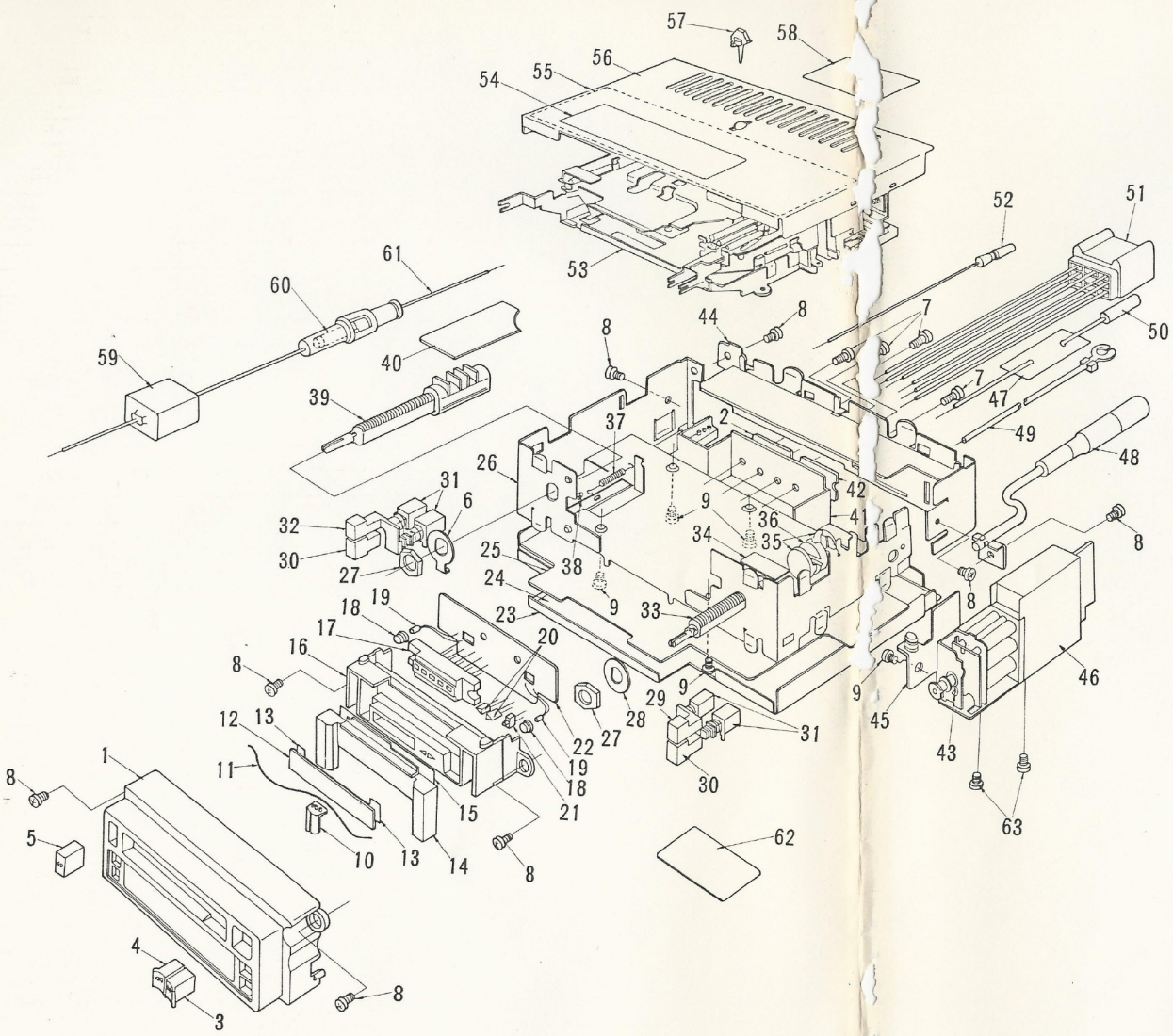

REF.NO.	PART NO. (ORDER NO.)	DESCRIPTION	Q'TY
58	285-1000-00	Guide label	1
59	009-0626-00	Choke	1
60	120-0050-00	Fuse (5A)	1
61	850-2137-00	A-lead	1
62	286-4888-00	Set plate	1
63	714-3003-00	Machine screw (M3x3)	2

REF.NO.	PART NO. (ORDER NO.)	DESCRIPTION	Q'TY
51	851-2408-01	Speaker lead	1
52	850-1580-01	A-lead	1
53	930-0500-00	Tape mechanism	1
54	285-1045-00	Guide label	1
55	347-1140-00	Insulator	1
56	310-1091-00	Upper case	1
57	335-1360-00	Lock pin	1

PARTS LIST:

◎Main section

REF.NO.	PART NO. (ORDER NO.)	DESCRIPTION	Q'TY
1	940-0320A	Escutcheon ass'y	1
2	051-0459-00	IC (LA4461)	1
3	382-0361-00	Button (▶▶)	1
4	382-0362-00	Button (◀◀)	1
5	382-0363-00	Button (◀▶)	1
6	745-0635-00	Washer	1
7	714-3010-81	Machine screw (M3x10)	4
8	731-3006-80	Tap tight (M3x6)	8
9	714-3004-81	Machine screw (M3x4)	5
10	376-0884-00	Dial pointer	1
11	830-0500-83	Dial cord	1
12	372-3035-00	Dial plate	1
13	347-0987-00	Adhesive paper	1
14	372-3034-00	Dial plate	1
15	347-1104-00	Adhesive paper	1
16	374-0824-00	Back plate	1
17	379-0035-03	Indicator	1
18	345-3436-02	P.L cap	2
19	017-0345-16	Pilot lamp	2
20	001-0338-00	LED (◁▷)	2
21	001-0271-00	LED (ST)	1
22	099-6555-00	P.W.B	1
23	304-0351-00	Lower cover	1
24	347-1139-00	Insulator	1
25	099-6554-00	P.W.B	1
26	311-1071-00	Lower case	1
27	722-0231-00	Hexagon nut	2
28	745-0514-01	Flat washer	1
29	382-0425-00	Button (MTL)	1
30	382-0426-00	Button (LOUD, NL)	2
31	013-3644-01	Switch (AM/FM, LOUD, MTL, NL)	4
32	382-0424-00	Button (AM/FM)	1
33	012-4007-00	Variable resistor (TUN/FAD)	1
34	099-6554-00	P.W.B	1
35	335-1121-00	Oldham joint	2
36	335-1122-00	Oldham joint	1
37	750-2175-00	Spring	1
38	335-0894-00	Dial cord pulley	1
39	012-4006-00	Variable resistor (VOL/BAL)	1
40	099-6554-00	P.W.B	1
41	944-0635-00	Filter ass'y	1
42	051-0458-00	IC (LA4460)	1
43	746-0668-01	Lock washer	1
44	307-0356-00	Rear cover	1
45	330-7543-00	Pulley holder	1
46	941-0113-00	AM/FM tuner pack	1
47	285-0667-00	Guide label	1
48	092-0522-06	Antenna receptacle	1
49	840-0345-00	Bonding wire	1
50	852-6652-00	Extension lead	1

CIRCUIT DIAGRAM:

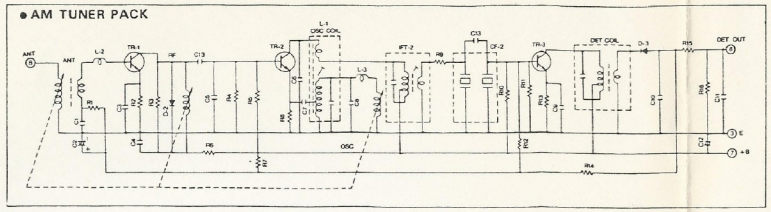

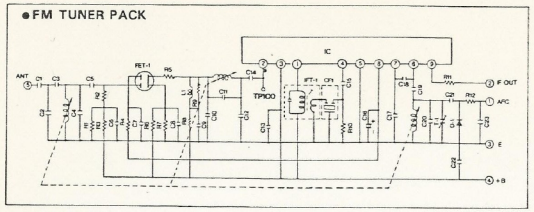

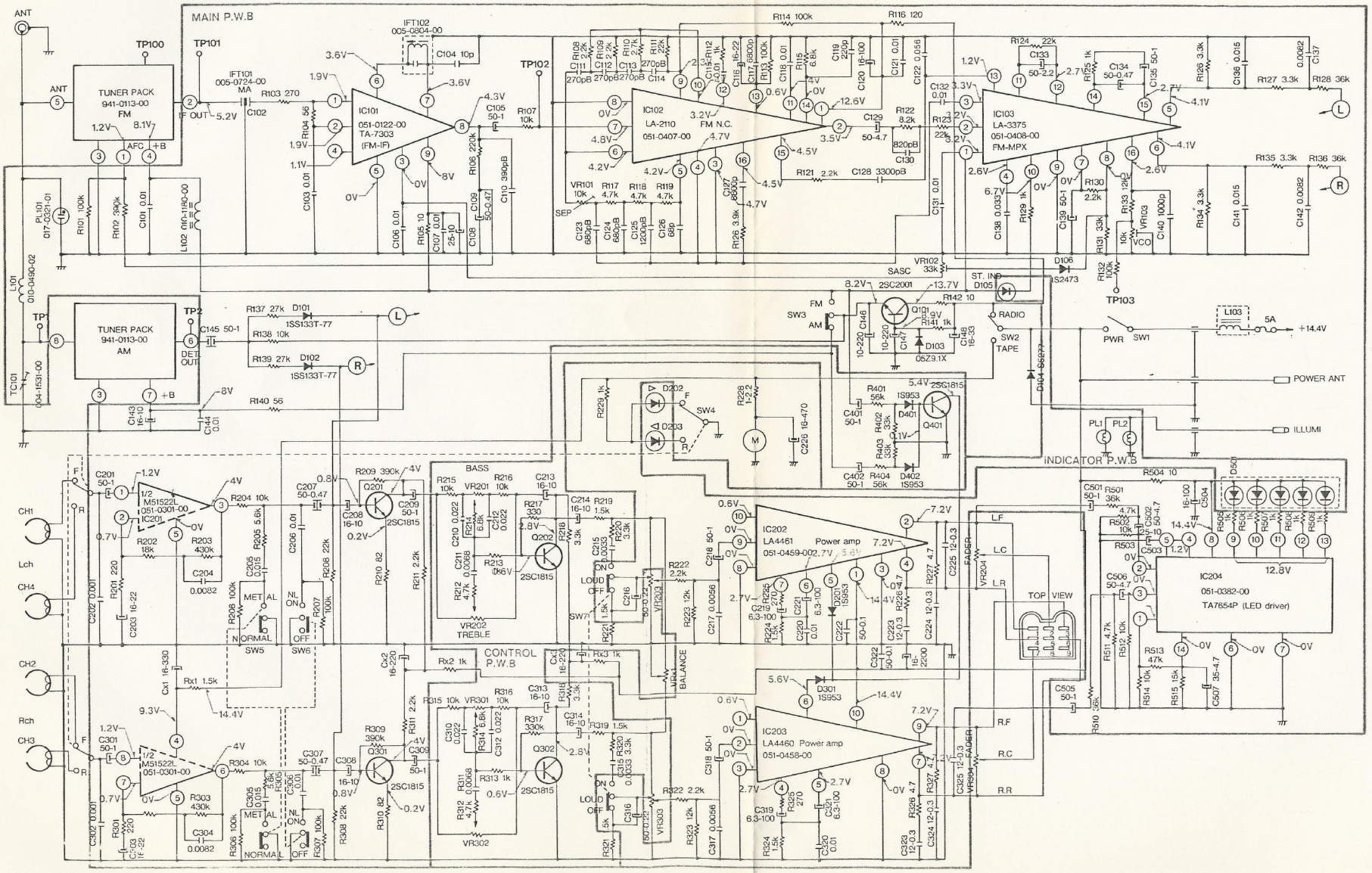

PRINTED WIRING BOARD:

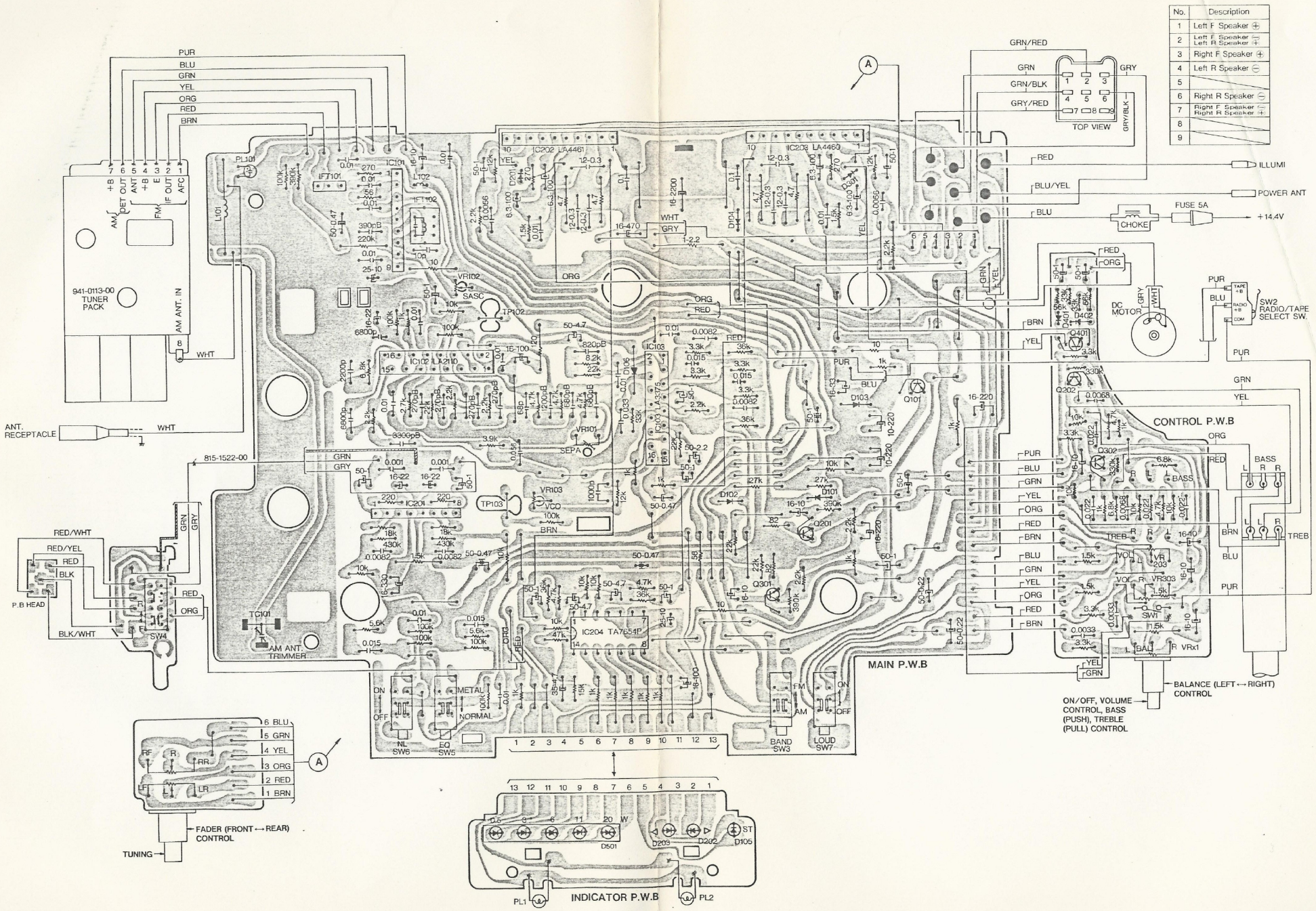

■EXPLODED VIEW:

◎Mechanism section

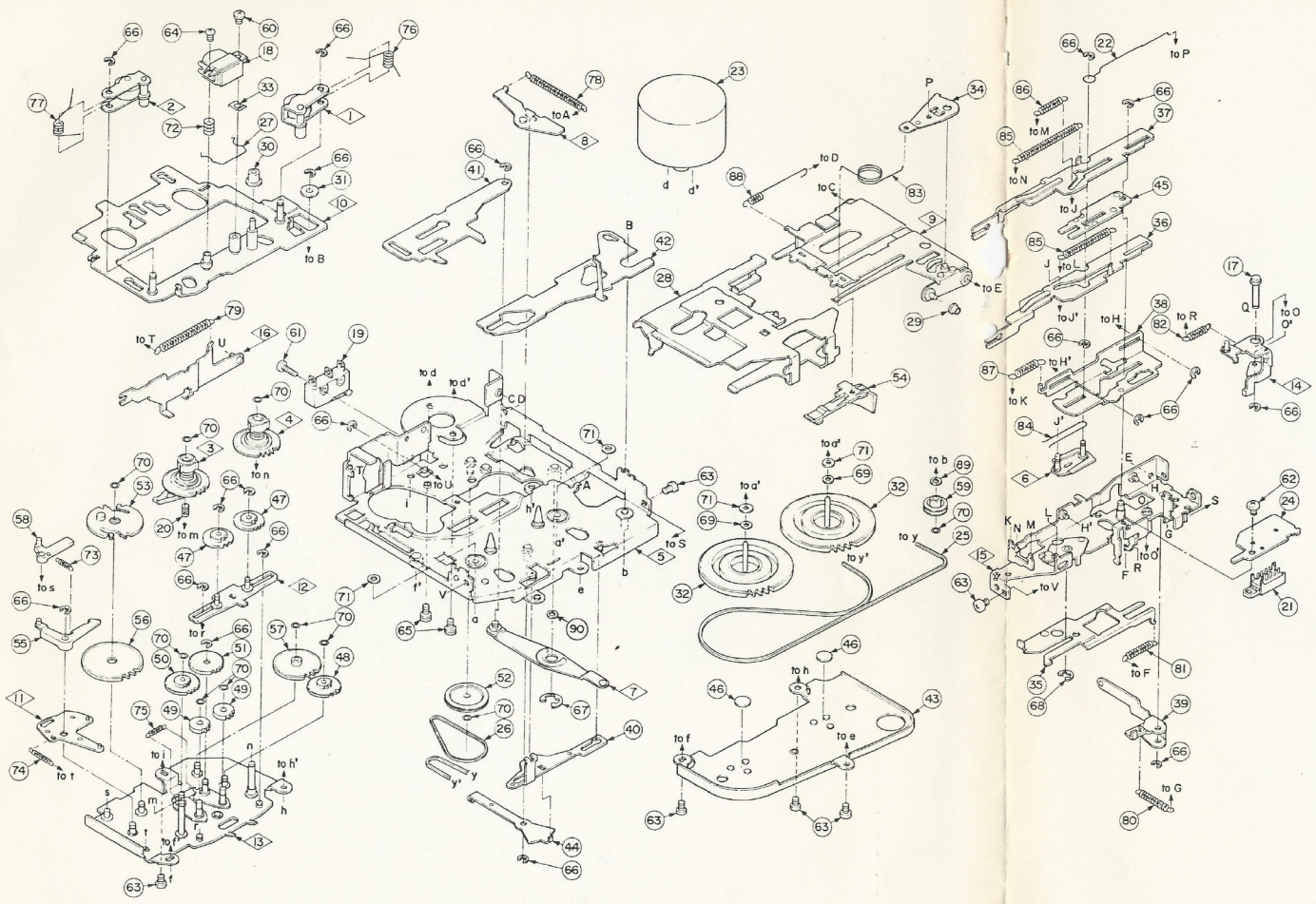

REF.NO.	PART NO. (ORDER NO.)	DESCRIPTION	Q'TY
78	750-2139-00	Spring	1
79	750-2140-01	Spring	1
80	750-2141-00	Spring	1
81	750-2142-01	Spring	1
82	750-2143-01	Spring	1
83	750-2151-01	Spring	1
84	750-2146-01	Spring	1
85	750-2147-01	Spring	2
86	750-2148-00	Spring	1
87	750-2149-01	Spring	1
88	750-2150-00	Spring	1
89	746-0624-00	Washer	1
90	745-0640-00	Washer	1

REF.NO.	PART NO. (ORDER NO.)	DESCRIPTION	Q'TY
64	716-0286-00	Screw (for Head azimuth)	1
65	732-2604-11	Sems screw (M2.6x4)	2
66	743-1500-10	E-ring	19
67	743-4000-10	E-ring	1
68	744-0006-01	E-ring	1
69	746-0617-00	Washer	2
70	746-0628-01	Washer	10
71	746-0688-01	Washer	4
72	750-1910-00	Spring	1
73	750-2134-00	Spring	1
74	750-2135-01	Spring	1
75	750-2136-01	Spring	1
76	750-2137-01	Spring	1
77	750-2138-01	Spring	1

REF.NO.	PART NO. (ORDER NO.)	DESCRIPTION	Q'TY
50	631-0356-00	Gear-R	1
51	631-0357-00	Gear-F	1
52	631-0358-01	Gear pulley	1
53	631-0359-01	Power gear	1
54	631-0360-01	Pack stopper	1
55	631-0361-00	Lock link	1
56	631-0362-01	Cam gear	1
57	631-0363-00	Gear-A	1
58	631-0364-01	Sub lock link	1
59	631-0370-00	Tension pulley	1
60	714-2003-81	Machine screw (M2x3)	1
61	714-2308-81	Machine screw (M2.3x8)	1
62	714-2603-81	Machine screw (M2.6x3)	1
63	714-2604-81	Machine screw (M2.6x4)	6

■PARTS LIST:

◎Mechanism section

REF.NO.	PART NO. (ORDER NO.)	DESCRIPTION	Q'TY
1	960-3321-02	Roller F ass'y	1
2	960-3322-02	Roller R ass'y	1
3	960-3323-01	Reel base ass'y	1
4	960-3324-01	Reel base ass'y	1
5	960-3325-06	Deck plate ass'y	1
6	960-3327-01	Spring H ass'y	1
7	960-3328-02	Coupling P ass'y	1
8	960-3329-01	Link ass'y	1
9	960-3330-01	Guide arm ass'y	1
10	960-3331-03	Head plate ass'y	1
11	960-3332-01	Check P-B ass'y	1
12	960-3333-00	FF plate ass'y	1
13	960-3334-03	Bottom P ass'y	1
14	960-3336-02	Lock plate ass'y	1
15	960-3337-04	Frame ass'y	1
16	960-3338-02	Program lever ass'y	1
17	632-1153-01	Lock plate pin	1
18	011-0274-00	Head	1
19	013-2690-03	Switch	1
20	750-2155-00	Spring	1
21	013-3646-00	Switch	1
22	750-2152-01	Spring	1
23	960-3353-00	D.C. motor ass'y	1
24	099-6334-01	P.W.B	1
25	602-0068-00	Belt-A	1
26	602-0069-00	Belt-B	1
27	750-2156-00	Spring	1
28	606-0071-02	Pack guide	1
29	610-0080-00	Roller	1
30	610-0101-00	Roller-A	1
31	610-0104-02	Roller	1
32	611-0062-00	Flywheel	2
33	630-1279-00	Spacer	1
34	630-1394-00	Swing plate	1
35	630-1399-02	Off plate-B	1
36	630-1401-01	FF lever-A	1
37	630-1403-02	REW lever	1
38	630-1404-02	Eject plate	1
39	630-1405-00	Off arm	1
40	630-1407-01	FF plate-B	1
41	630-1410-00	Power plate	1
42	630-1411-02	Change plate	1
43	630-1415-01	Flywheel plate	1
44	630-1420-00	FF link	1
45	630-1422-01	Hold plate	1
46	631-0293-00	Thrust washer	2
47	631-0353-00	FF-REW gear	2
48	631-0354-01	Gear-B	1
49	631-0355-00	Play idler gear	2