CLARION SERVICE MANUAL

MINI TYPE IC CAR STEREO

MODEL PE-420A

CLARION SHOJI. CO., LTD.
NEW KOJIMACHI BLDG., 3, 5-CHOME, KOJIMACHI, CHIYODA-KU, TOKYO, JAPAN. PHONE NO. 265-2931~4
USA BRANCH: CLARION SHOJI. CO., LTD. (U.S.A.)
2308 COTNER AVENUE, LOS ANGELES, CALIF., 90064, U.S.A. PHONE NO. 272-1178. 272-1169. 479-5555.
EUROPE BRANCH: CLARION SHOJI (EUROPA) G.m.b.H.
2000 HAMBURG 76, SCHOENE AUSSICHT 35, GERMANY. PHONE: 2207667

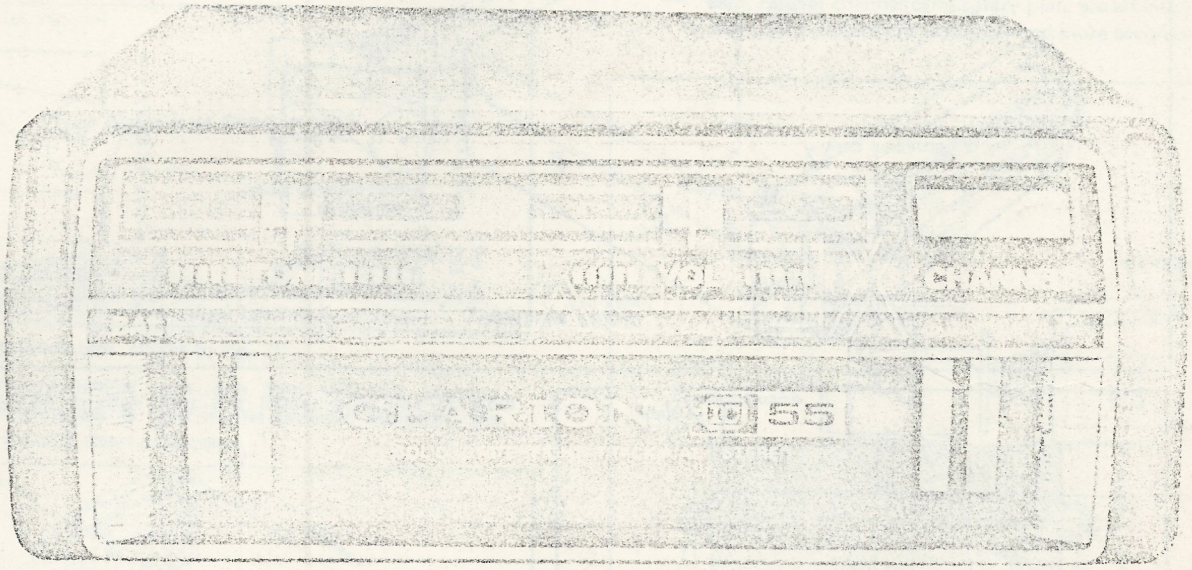

* SPECIFICATIONS:

Reproduction:	8 track, 4 program, 2 Channel, Stereo
Tape speed:	3.75 ips.(9.5cm/sec)
Wow and flutter:	Less than 0.3%
Maximum output:	More than 6W×2
Distortion:	Less than 10% (output 3.0 W)
S/N ratio:	More than 45 dB
Power amplitude:	More than 100 dB
Left - right Cross talk:	More than 30dB
Adjacent track cross talk:	More than 40 dB
Reproduced frequency:	50 Hz ~ 10,000 Hz
Output impedance:	4 Ω
Power:	DC. 10.8 V ~ DC. 15.6 V
Amperage:	Less than 1.2 A
Weight:	3.5 lbs (1.6kg)
Dimension:	Width 5.5" (140 m/m)
	Height 2.17" (55 m/m)
	Depth 7.1" (180 m/m)
Semiconductors:	2 ICs. 8 transistors. 1 Diode. 4 thermistors
Pre amplifier	TA-7063P X 2 (IC)
AF amplifier	2SC373 X 2
Driver amplifier	2SC735 X 2
Power amplifier	2SB461 X 4
	1S1943 X 1 (Silicon diode)
	002-0140-00 X 4 (Thermistor)

* COMPONENTS:

PA-4202-02	Car stereo unit	1 Set
300-0490-00	Rear mounting bracket	1 Each
300-5074-00	Mounting bracket	1 Each
852-4529-01	Extention lead	1 Each
370-2851-00	Escutcheon	1 Each
921-5701-00	Parts bag	1 Set
280-2903-00	Owner's guide	1 Each
950-4459-01	Packing kit	1 Set

* FEATURES:

- Mini car stereo
  Very compact, light weight, 8 track and 4 program reproduction unit specially designed for automobiles.
- Number lighting type indicator
  By the employment of number lighting type indicator, the reproduction program in use can be identified at a glance.
- Completely slide-type volume controls
  Completely slide type volume controls allow simple and accurate adjustment of sound, tone and balance.
- ICs in pre-amplifier section
  IC's provide reproduction of powerful and beautiful sound and improvement of stability and reliability.
- New mechanism
  Since the vertical method is employed in the head shift mechanism, adjustment is simple and expansion of high bands and stability of left and right outputs are improved.
  A very simplified mechanism is used. Therefore, the unit is highly compact. Durability of the unit and stability of wow/flutter are improved by supporting a flywheel with capstan housing a special washer.

* INSTALLATION OF MAIN UNIT: (Refer to Fig. 1).

Install mounting bracket under instrument panel or under glove box by drilling 1/5 inch diametter holes. Use hex bolt (W-sems type), flat washer which are contained in the accessory bag. Fix unit with perforated rear bracket, if necessary.

Note 1: If necessary, the main unit mounting bracket can be bent or cut according to the shape of installation location. Since mounting holes are provided in the side of the bracket at 10 mm intervals, the main unit can be installed on different levels.

Printed in Japan 298-1567-00

Instrument panel

3-Hex bolt (M5×0.8×16. W-sems type)
734-5016-31

3-Hex nut(M5×0.8)
723-5000-11

3-Flat washer (M5)
740-5000-10

2-Rubber cushion
345-2351-00

Mounting bracket
300-5074-00

3-Hex bolt(M5×0.8×10.W-sems type)
734-5010-31

Rear mounting bracket
300-0490-00

Main unit
(MODEL PE-420A)

※Danger / do not use more than 0.4" (10m/m) length.

Fig.1.

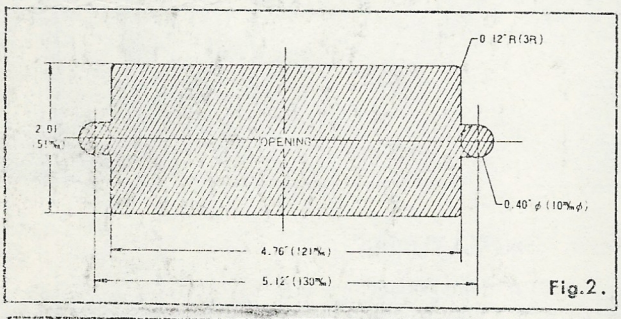

Fig.2.

Note 2: You may install this unit with in 45° angle.

Hex bolt(W-sems type M5×0.8×16)
734-5016-31

Instrument panel

Hex nut(M5×0.8)
723-5000-11

Flat washer(M5)
740-5000-10

Hex bolt
(W-sems type M5×0.8×10)
735-5010-31

Mounting bracket 300-0490-00

Main unit(PE-420A)

Escutcheon 370-2851-00

2-Escutcheon attaching bracket 330-4868-02

2-Machine screw(M4×0.7×12)714-4012-11

Escutcheon 370-2795-01

NOTE: ※ Danger / Do not use more than 0.4"(10m/m) length.

Fig.3.

＊NEW MECHANISM:

1. **Complete block type and vertical-type head shift mechanism**
   The vertical shift mechanism employs a method of shifting the head with the head face maintained vertically, which is different it from the expansion method of shifting the head by rotary motion around the center of the head arm fulcrum. Therefore, the allows for expansion of high band sound and stability of left and right output.

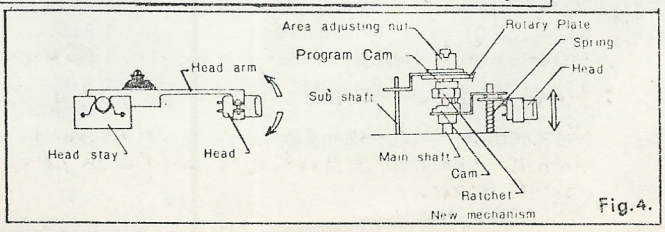

Fig.4.

2. Installation of flywheel (Refer to Fig. 5)

Since the capstan housing supports the flywheel with special washers (poly-slider washers) between the flywheel and capstan housing, stability of wow flutter and shock resistance are improved.

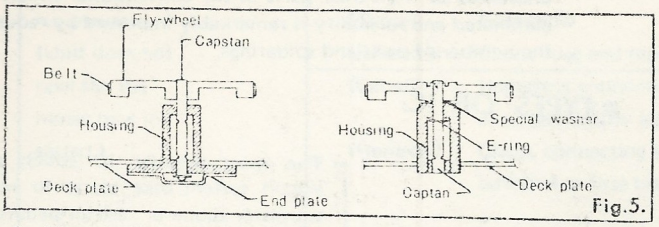

Fig.5.

3. Very small mechanism (Refer to Fig. 6)

Each individual "block" mechanism makes the entire mechanism small.

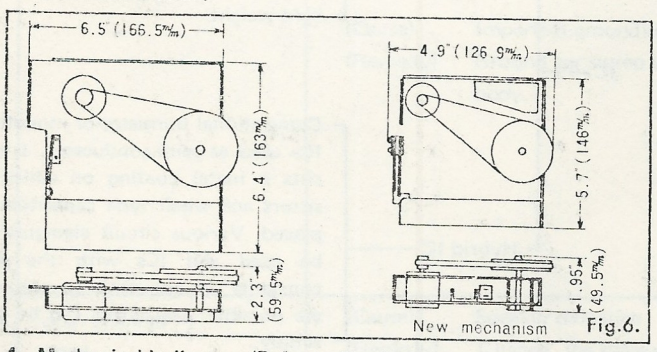

Fig.6.

4. Mechanical indicator (Refer to Fig. 7)

Since the mechanical type one light indicator (number indication method) is used in the program indicator, the program in use is clearly indicated.

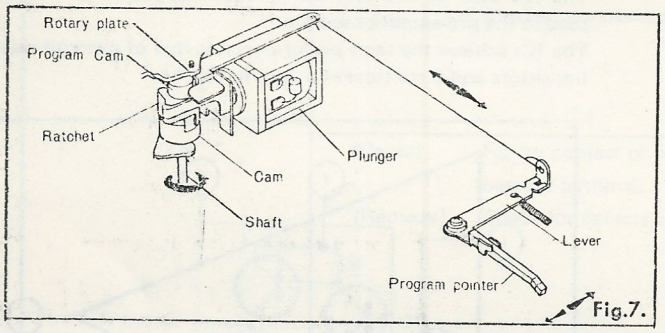

Fig.7.

* ADVANTAGES AND FEATURFS OF VERTICAL HEAD SHIFT MECHANISM:

1. Completely unified head shift mechanism (Refer to Fig. 8)

All parts for the head shift mechanism; plunger, cam, ratchet channel cam, channel lever, flywheel, etc. are provided in the die-cast housing section so that the head shift mechanism is very compact.

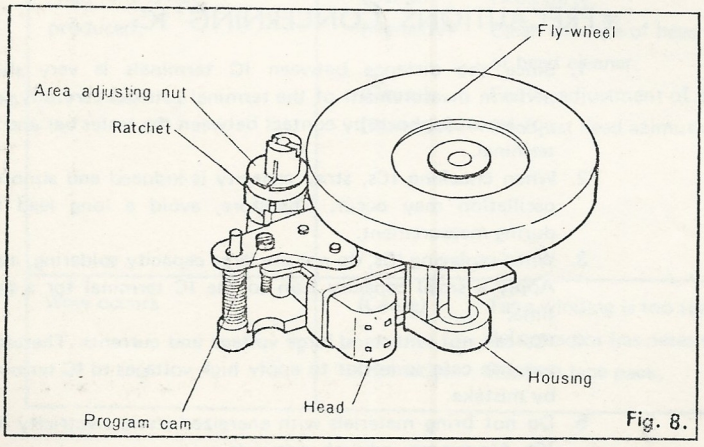

Fig. 8.

2. Fixed cam and ratchet rotating method (Refer to Fig. 9)

This method which differs from the conventional method is Clarion's unique design in which the cam is fixed and the ratchet is rotated.

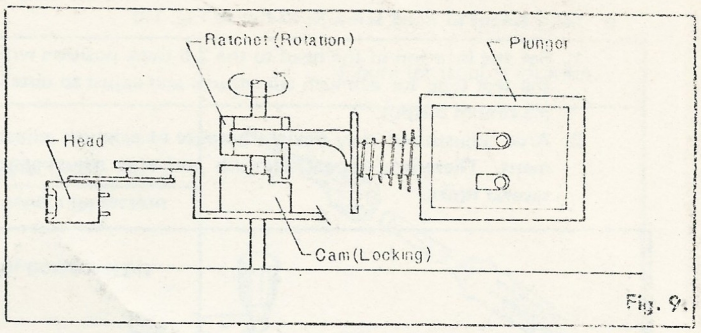

Fig. 9.

3. Parts concentrated on shaft (Refer to Fig. 10)

Since an area adjusting screw as well as the small mechanism, cam, ratchet channel cam, rotary plate are all installed on one shaft, area adjustment is simpler and more accurate.

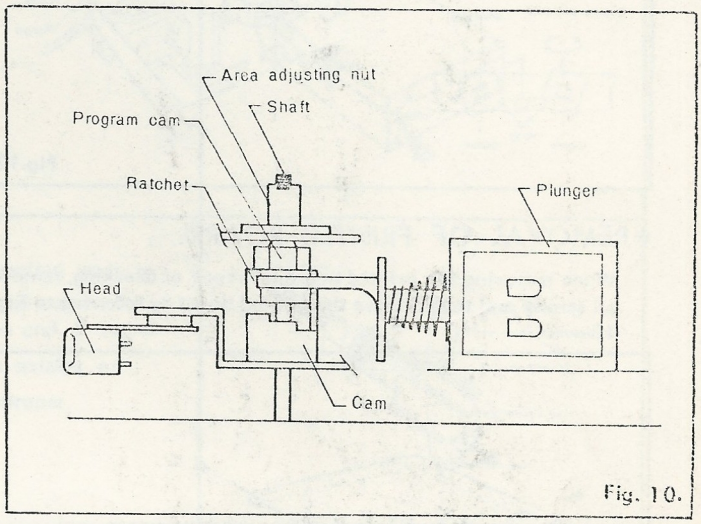

Fig. 10.

* ADJUSTMENT OF MECHANISM:

o Adjustment of head location and angle

If the location and angle of the head is not correct in respect to the tape, there will be insufficient sound, poor tone or crosstalk. When these occur, perform adjustment by means of the area adjusting screw and azimuth adjusting screw on the rear of the head location.

o Adjustment of head area (Refer to Fig.11)

1. Balance left and right sides with the balance adjusting knob.
2. Set the head location to the 2-6 track position (program indicator shows No. 2) with the test tape for area adjustment and adjust by turning the area adjusting screw to obtain maximum output.
3. After the above steps, adjust the 1-5, 3-7, and 4-8 track positions in the same manner.

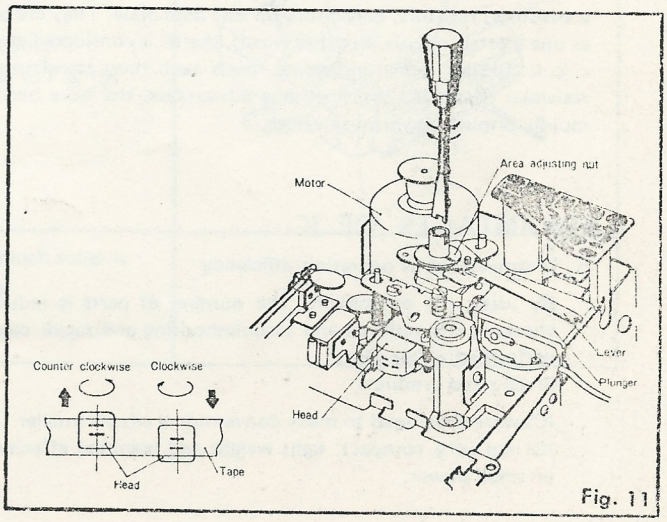

Fig. 11

o Adjustment of head azimuth (Refer to Fig. 12)

1. Set the location of the head to the 2-6 track position with the test tape for azimuth adjustment and adjust to obtain maximum output.
2. Area adjustment may deviate because of azimuth adjustment. Therefore, repeat azimuth and area adjustments several times.

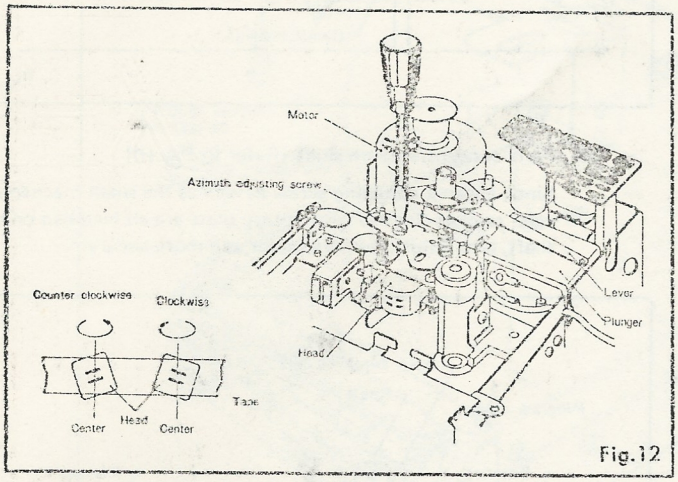

Fig.12

*REMOVAL OF PRINTED BOARD:

When removing the printed board for repair or checking, remove all screws and then remove the printed board by referring to Fig. 13.

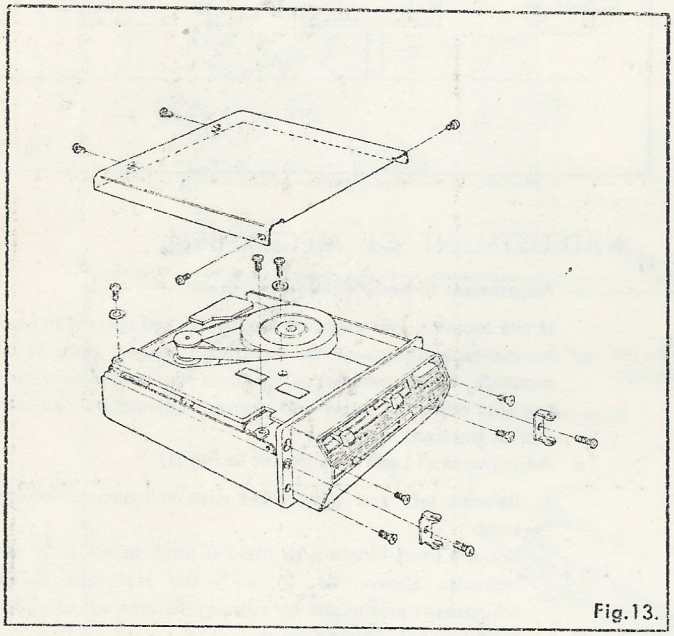
Fig.13.

*IC

IC is the abbreviation for "Intagrated circuits" containing transistors, resistors, capacitors on one base plate. They are used as one electric circuit. In other words, the IC is considered as one circuit unlike from individual parts such they transistors or resistors. Since ICs have various advantages, the have become rapidly popular in various devices.

*ADVANTAGES OF IC:

o Improvement of operation efficiency

By using ICs extensively, the number of parts is reduced, checking is simplified and troubleshooting and repair can be performed efficiently.

o Small sized products

ICs were developed to make conventional circuit smaller. ICs are very compact, light weight and operated effeciently on small power.

o Improvement of operation stability

Stability against variation in external conditions (temperature or power voltage) is improved, unstable factors due to uneveness of individual parts in the conventional circuit are eliminated and reliability is remarkably improved by reducing the number of parts and solderings.

*TYPES OF IC:

- IC
  - Monolithic IC — The most popular IC which uses silicon system base plates to which transistor diode or resistor pellets are wired. Its features are that mass production is possible, element density is great and it is small and light weight.
  - Hybrid IC — Conventional transistor or monolithic ICs used as semi-conductors. It consists a metal coating on which resistors and small type capacitors are placed. Various circuit elements can be used and ICs with the same constants as conventional elements are possible. Capacitors can be used simply.

*IC EMPLOYED IN THIS UNIT: (Refer to Fig. 14)

The ICs used in this unit are "Monolithic linear IC." Two are used in the pre-amplifier section.
The ICs achieve the same performance as that of a circuit using 3 transistors and 5 resistors as shown in Fig. 14.

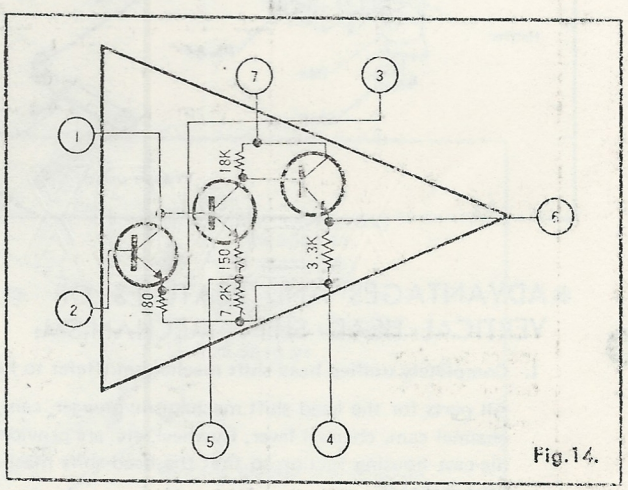

Fig.14.

*PRECAUTIONS CONCERNING IC:

1. Since the distance between IC terminals is very short, perform measurement of the terminal voltages carefully so as not to cause shorts by contact between the tester bar and the terminal.
2. When checking ICs, stray capacity is induced and abnormal oscillation may occur. Therefore, avoid a long lead line during measurement.
3. When replacing ICs, do not use large capacity soldering, irons. Apply a small capacity iron to the IC terminal for a short time.
4. ICs can not withstand large voltage and currents. Therefore, exercise care so as not to apply high voltages to IC terminals by mistake.
5. Do not bring materials with energized static electricity near ICs. Always ground such materials.
6. When the soldering iron has or electric potential due an internal failure in the soldering iron, always ground the soldering iron before soldering.

* SIMPLE TROUBLESHOOTING AND REMEDIAL PROCEDURES:

Symptom	Cause and remedy		Figure for trouble location
No power (Unit does not operate the music tape inserted.)	(Cause) (Remedy)	Fuse blow Check fuse and replace if defective.	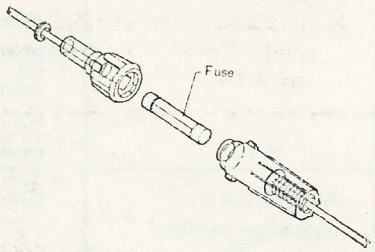
	(Cause) (Remedy)	Imperfect connection of connecting section of power supply lead. Check connecting section of power supply terminal or fuse box.	
	(Cause) (Remedy)	Imperfect grounding of car stereo unit. Ground car stereo unit properly on the car body.	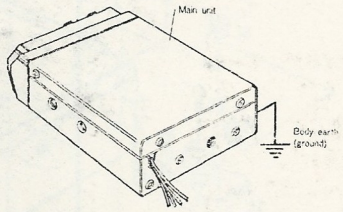
one channel dead	(Cause) (Remedy)	Speaker defective Change the speaker connection leads to other terminal. If sound comes out, that channel is defective and if sound does not come out the speaker or speaker connection is improper.	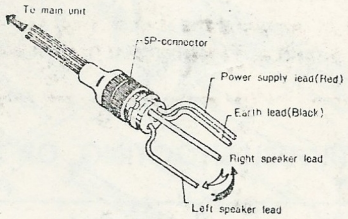
	(Cause) (Remedy)	Faulty contact or opening of speaker connection terminal. Check for defects and repair.	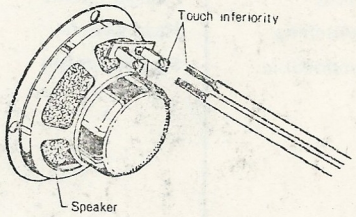
Indicator lights but no sound is produced.	(Cause) (Remedy) (Cause) (Remedy)	Motor does not rotate. Check motor or motor connection Shape or recording of tape pack is faulty. Replace tape pack.	
High tone is not produced.	(Cause) (Remedy) (Cause) (Remedy)	Head dirty. Clean the face of head with pure alcohol or head cleaner. Faulty adjustment of head azimuth. Readjust head azimuth (Refer to Fig. 12)	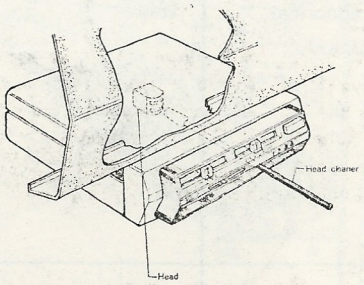
Wow occurs	(Cause) (Remedy)	Tape winding is too tight or pinch roller is deformed or has deteriorated. Replace tape pack.	

Symptom	Cause and remedy		Figure for trouble location
Crosstalk occurs	(Cause)	Faulty recording of tapes or deformation of tape pack.	
	(Remedy)	Replace tape pack.	
	(Cause)	Faulty adjustment of head area.	
	(Remedy)	Readjust head area. (Refer to Fig. 11)	
	(Cause)	Faulty adjustment of head azimuth.	
	(Remedy)	Readjust head azimuth. (Refer to Fig. 12)	
Automatical switching channel not possible	(Cause)	Sensing tape is defective or solenoid contact dirty.	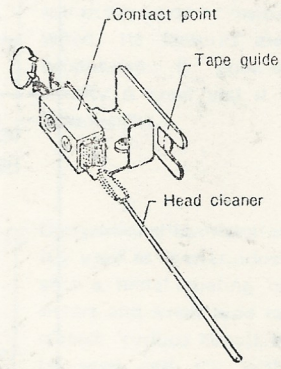
	(Remedy)	Replace tape pack or clean solenoid contact face with pure alcohol or head cleaner.	

* TROUBLESHOOTING OR REMEDIAL PROCEDURES: (mechanism section) Refer to Disassembly Figure.

Symptom	Defective circuit (point)	Trouble location and cause	Remedy
Head switching impossible	Plunger circuit Head switching mechanism	o Faulty contact or defective plunger switch mechanism.	Replace.
		o 1S1943 (diode) shorted.	Replace.
		o Plunger coil layer shorted.	Replace.
		o Solenoid contact defective.	Replace
		o Faulty clutching of ratchet and ratchet kick.	Repair or replace.
		o Incomplete wiring of head lead.	Repair.
		o Tape defective.	Replace.
Crosstalk occurs	Head shift mechanism	o Shape of tape pack improper.	Replace.
		o Faulty adjustment of area.	Adjust.
High or wow abnormal speed.	Driving mechanism system	o Flywheel defective.	Replace (always insert special washer).
		o Belt defective	Replace.
		o Grease accumulated on pulley, belt or flywheel.	Clean.
		o Grease or dirt accumulated on capstan.	Clean.
		o Oilless bearing broken.	Replace.
		o Motor defective.	Replace.
		o Tape pack defective.	Replace.
		o Tape protector contacts with capstan due to deformation.	Repair.
Channel indicator.		o Coupling rod between pointer and lever disengaged.	Repair.
		o Loosened screw secruing lever sleeve.	Repair.
		o Pilot lamp or lead wire open or faulty soldering.	Replace or repair.
		o Faulty contact of rotary switch or accumulated dirt.	Repair or clean.

＊EXPLODED VIEW (See Parts List)

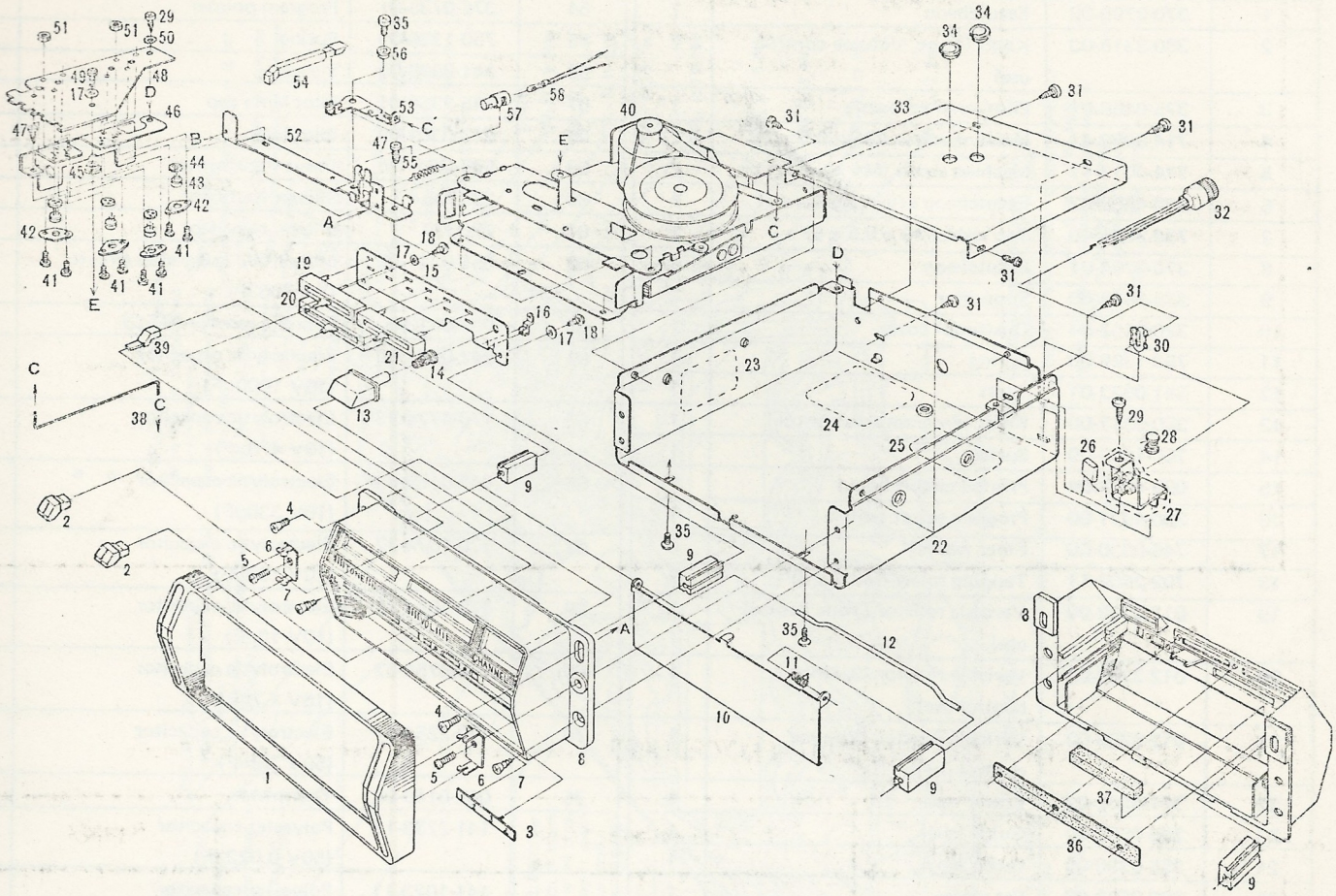

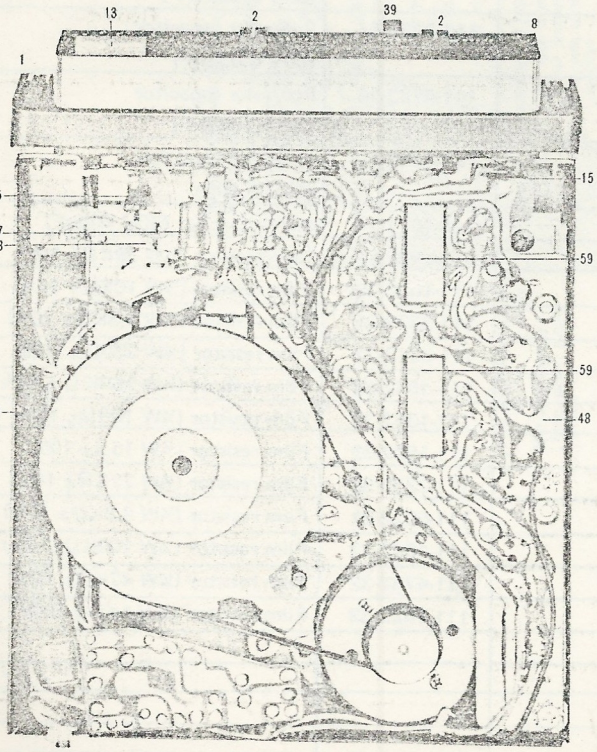

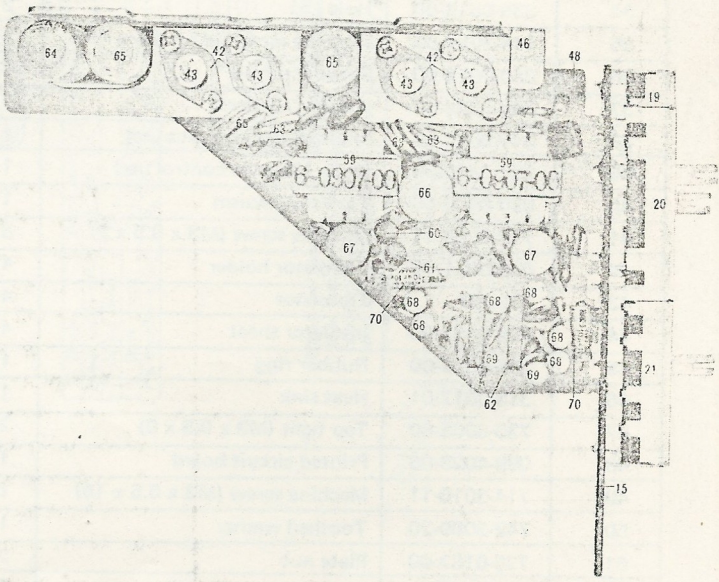

*PARTS LIST (Refer to disassembly diagram: Grey portions in the parts list designate assemblies.)

REF. NO.	PART NO.	DESCRIPTION	P.C.S.
1	370-2795-02	Escutcheon	1
2	380-3315-00	Knob (Tone, Volume control use)	2
3	375-0486-01	Pilot lamp accessory	1
4	714-3006-41	Machine screw (M3 x 0.5 x 6)	2
5	714-4012-11	Machine screw (M4 x 0.5 x 12)	2
6	330-4868-02	Escutcheon attaching bracket	2
7	730-3006-40	Tap tight (M3 x 0.5 x 6)	2
8	370-2794-01	Escutcheon	1
9	335-0604-00	Supporter	2
10	320-0163-04	Dustproof cover	1
11	750-1399-00	Spring	1
12	341-0922-01	Shaft	1
13	380-3317-00	Knob (Program selector use)	1
14	750-1400-00	Spring	1
15	099-4024-04	Printed circuit board	1
16	330-4921-00	Program select switch	1
17	746-0030-00	Fiber washer	3
18	702-2608-11	Tapping screw (M2.6 x 8)	2
19	012-3332-00	Variable resistor (Tone control use)	1
20	012-3288-00	Variable resistor (Balance control use)	1
21	012-3289-00	Variable resistor (Volume control use)	1
22	311-0802-02	Lower case	1
23	285-0582-00	Guide label	1
24	285-0330-00	Guide label	1
25	286-3678-00	Set plate	1
26	141-1043-15	Polyester capacitor (50V 0.1 F)	1
27	944-0387-00	Filter assembly	1
28	010-0820-01	Coil	1
29	730-3006-80	Tap tight (M3 x 0.5 x 6)	2
30	335-0580-00	Lead clamp	1
31	730-3006-89	Tap tight (M3 x 0.5 x 6)	6
32	852-4528-00	Extension lead	1
33	310-0743-01	Upper case	1
34	335-0618-00	Hole cap	2
35	714-3004-89	Machine screw (M3 x 0.5 x 4)	3
36	353-0016-00	Shading rubber	1
37	345-2370-00	Shading rubber	1
38	341-0921-01	Shaft (Program select use)	1
39	380-3316-00	Knob (Balance control use)	1
40	930-0405-00	Tape mechanism	1
41	714-3008-11	Machine screw (M3 x 0.5 x 8)	8
42	079-0001-00	Transistor holder	4
43	2SB461	Transistor	4
44	078-0011-00	Insulator sheet	4
45	335-0622-00	Rubber ring	1
46	313-0817-01	Heat sink	1
47	730-3008-80	Tap tight (M3 x 0.5 x 8)	2
48	099-4023-06	Printed circuit board	1
49	714-3010-11	Machine screw (M3 x 0.5 x 10)	1
50	742-3000-20	Toothed washer	1
51	725-0182-00	Plate nut	2
52	330-4866-01	Printed circuit board attaching plate	1
53	330-4922-00	Program pointer arm	1
54	376-0735-01	Program pointer	1
55	750-1326-00	Spring	1
56	341-0899-00	Sleeve	1
57	345-2350-01	Pilot lamp cap	1
58	017-0301-00	Pilot lamp	1
59	006-0907-00	Input transformer	2
60	2SC735	Silicon transistor	2
61	2SC373	Silicon transistor	2
62	051-0011-00	Monolithic integrated circuit (TA-7063P)	2
63	031-0010-00	Flexible resistor (0.5Ω)	4
64	042-0151-00	Electrolytic capacitor (16V 1000μF)	1
65	170-4774-22	Electrolytic capacitor (10V 470μF)	2
66	042-0150-00	Electrolytic capacitor (10V 330μF)	1
67	170-1074-22	Electrolytic capacitor (10V 100μF)	2
68	170-1064-22	Electrolytic capacitor (10V 10μF)	6
69	170-4754-32	Electrolytic capacitor (16V 4.7μF)	2
70	170-2254-61	Electrolytic capacitor (50V 2.2μF)	2
71	002-0140-00	Thermistor	4
	141-2233-13	Polyester capacitor (50V 0.022μF)	2
	141-1023-11	Polyester capacitor (50V 0.001μF)	2
	141-5133-14	Polyester capacitor (50V 0.051μF)	2
	141-5123-12	Polyester capacitor (50V 0.0051μF)	2
	141-3333-14	Polyester capacitor (50V 0.033μF)	2
	141-4733-14	Polyester capacitor (50V 0.047μF)	1
	141-1043-15	Polyester capacitor (50V 0.1μF)	1
	144-1012-14	Mica capacitor (50V 100pF)	2
	111-3932-32	Film resistor (¼W 39KΩ± 10%)	2
	111-1032-32	Film resistor (¼W 10KΩ± 10%)	2
	111-3322-32	Film resistor (¼W 3.3KΩ± 10%)	2
	111-2212-32	Film resistor (¼W 220Ω± 10%)	2
	111-1542-32	Film resistor (¼W 150K Ω± 10%)	4
	111-1012-32	Film resistor (¼W 100Ω± 10%)	4
	111-1502-32	Film resistor (¼W 15Ω± 10%)	4
	111-2232-32	Film resistor (¼W 22KΩ± 10%)	2
	111-6822-31	Film resistor (¼W 6.8KΩ± 10%)	2
	111-1042-32	Film resistor (¼W 100KΩ±10%)	2
	111-4732-32	Film resistor (¼W 47KΩ± 10%)	2
	111-1022-32	Film resistor (¼W 1KΩ± 10%)	1

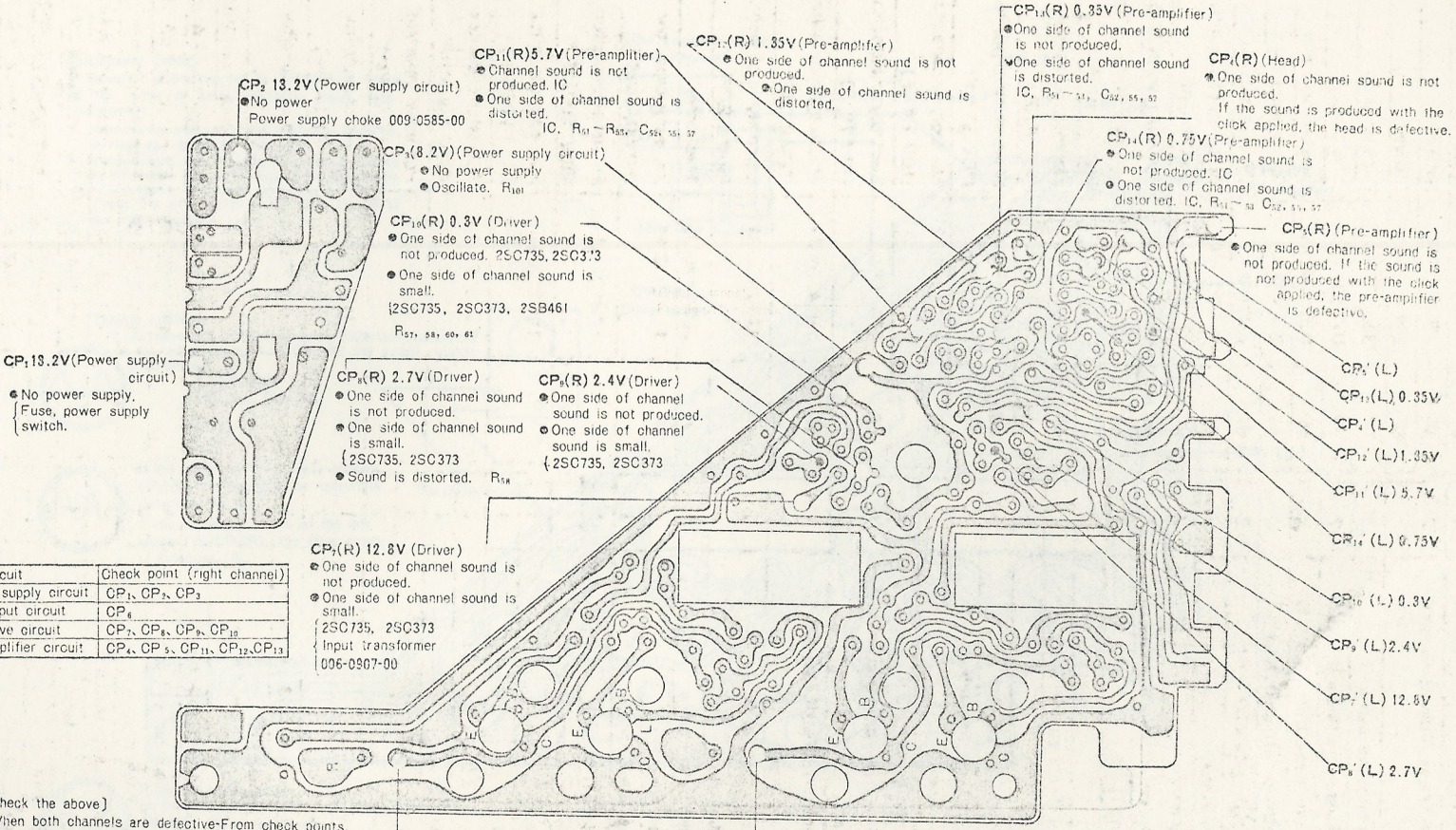

Circuit	Check point (right channel)
Power supply circuit	CP_1, CP_2, CP_3
Output circuit	CP_6
Drive circuit	CP_7, CP_8, CP_9, CP_{10}
Pre-amplifier circuit	CP_4, CP_5, CP_{11}, CP_{12}, CP_{13}

[Check the above]
When both channels are defective-From check points in power supply circuit.
When one side channel is defective-From check points in each circuit.

[Instrument Check]

If defective points can not be localized by means of the tester or other methods, check with instruments.

1. Instruments employed Low frequency osillator, Osilloscope, Millivalve voltmeter.
2. Measurement method Detect defective circuits by connecting the live terminal of the osilloscope to check points CP_4, CP_7 and CP_{15} in that CP_4. (Check the left channel in the same manner as the right channel.)

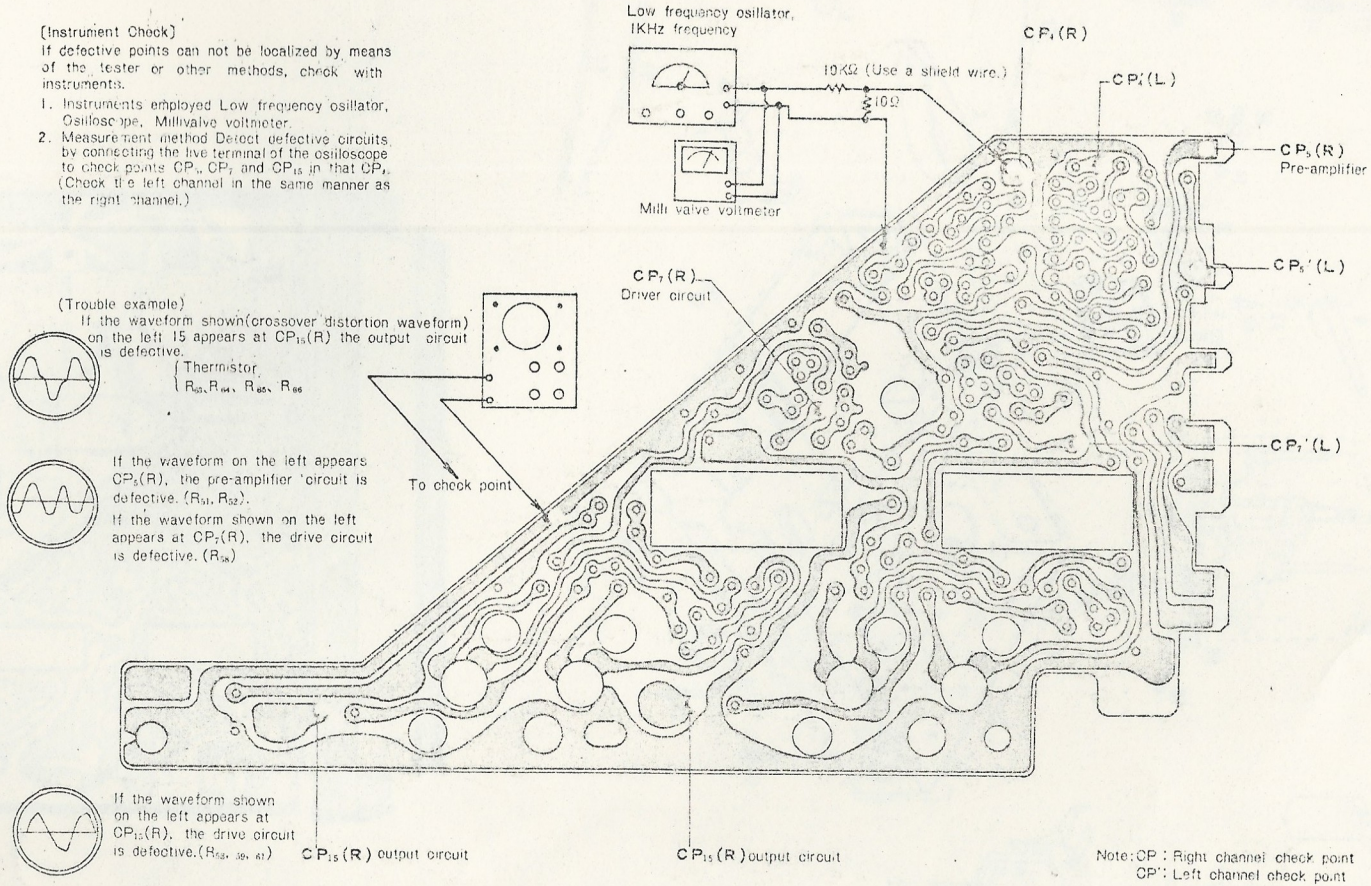

(Trouble example)

If the waveform shown(crossover distortion waveform) on the left 15 appears at $CP_{15}(R)$ the output circuit is defective.

{ Thermistor
R_{63}, R_{64}, R_{65}, R_{66}

If the waveform on the left appears $CP_5(R)$, the pre-amplifier circuit is defective. (R_{51}, R_{52}).

If the waveform shown on the left appears at $CP_7(R)$, the drive circuit is defective. (R_{58})

If the waveform shown on the left appears at $CP_{15}(R)$, the drive circuit is defective.(R_{58}, $_{59}$, $_{67}$)

Note: CP : Right channel check point
CP': Left channel check point

✻EXPLODED VIEW : Mechanism section (See Parts List)

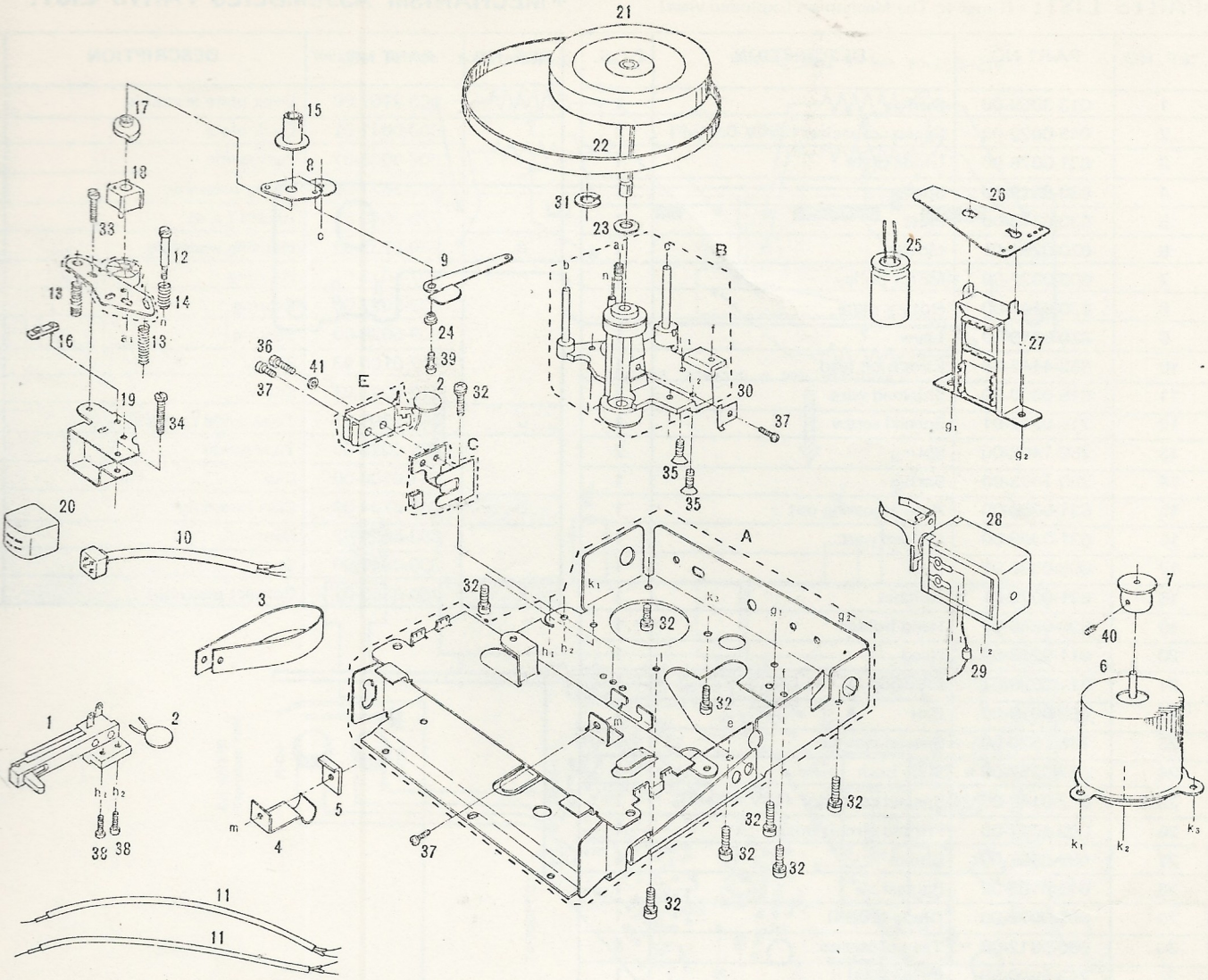

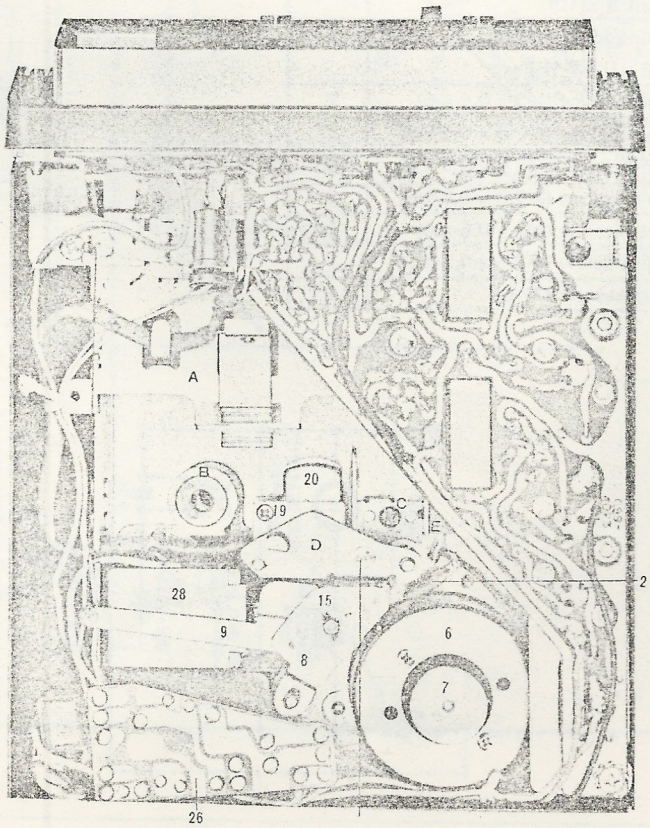

*PARTS LIST: (Refer to The Mechanism Exploded view)

REF. NO.	PART NO.	DESCRIPTION	P.C.S.
1	013-3059-00	Switch	1
2	043-0022-00	Special capacitor (250V 0.04μF)	2
3	631-0076-00	Guide plate	1
4	630-0519-00	Spring	1
5	630-0518-00	Plate	1
6	020-0294-01	Motor	1
7	603-0022-00	Motor pulley	1
8	630-0547-00	Rotary plate	1
9	630-0513-00	Lever	1
10	252-4442-00	Extension lead	1
11	815-0890-00	Shielded wire	2
12	716-0212-01	Special screw	1
13	750-1402-00	Spring	2
14	750-1403-00	Spring	1
15	631-0089-00	Area adjusting nut	1
16	631-0090-00	Molded part	1
17	608-0030-01	Cam	1
18	631-0075-01	Ratchet	1
19	630-0546-00	Head holder	1
20	011-0213-00	Head	1
21	611-0020-01	Flywheel	1
22	602-0019-00	Belt	1
23	746-0620-00	Special washer	1
24	632-0257-00	Slide bush	1
25	042-0148-00	Special capacitor (16V 470μF)	1
26	089-4041-00	Printed circuit board	1
27	009-0585-00	Choke	1
28	015-0190-02	Plunger	1
29	001-0077-00	Diode (10D4)	1
30	630-0612-00	Tape protector	1
31	743-4000-00	E-ring (M4)	1
32	732-3006-11	Sems screw (M3 x 0.5 x 6)	9
33	715-3010-61	Azimuth adjusting nut (M3 x 0.5 x 10)	1
34	715-2610-61	Machine screw (M2.6 x 0.5 x 10)	1
35	714-3006-41	Machine screw (M3 x 0.5 x 6)	2
36	714-2608-11	Machine screw (M2.6 x 0.5 x 8)	1
37	714-2606-11	Machine screw (M2.6 x 0.5 x 6)	3
38	714-2308-11	Machine screw (M2.3 x 0.5 x 8)	2
39	714-2006-11	Machine screw (M2 x 0.5 x 6)	1
40	718-2603-20	Machine screw (M2.6 x 0.5 x 3)	1
41	741-2600-21	Spring washer (M2.6)	1

*MECHANISM ASSEMBLIES PARTS LIST:

REF. NO.	PART NO.	DESCRIPTION	P.C.S.
A	960-2707-00	Deck plate assembly	1
	600-0041-01	Deck plate	1
	606-0036-01	Pack guide	1
	960-2627-00	Roller assembly	1
	728-3040-88	Rivet (3 x 4)	2
B	960-2733-03	Housing assembly	1
	607-0016-01	Housing	1
	600-0027-00	Bearing	1
	600-0028-00	Bearing	1
	612-0100-03	Shaft	1
	612-0096-01	Shaft	3
C	960-2705-01	Tape guide assembly	1
	605-0026-00	Tape guide	1
	661-0109-00	Cap	1
D	960-2734-00	Cam assembly	1
	608-0029-02	Cam	1
	630-0548-00	Stay	1
E	960-0360-02	Contact assembly	1

* PRINTED CIRCUIT BOARD:

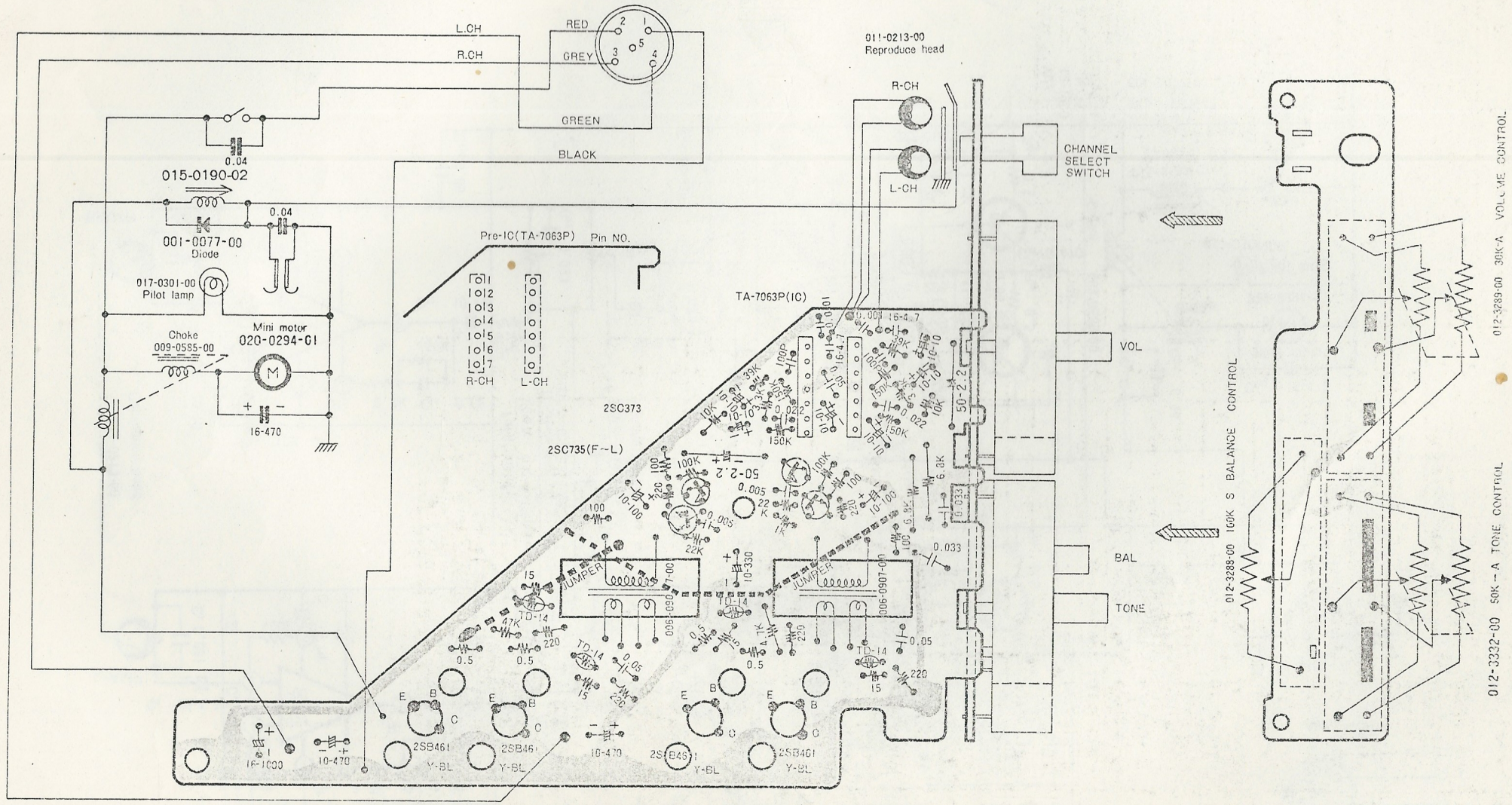

* CIRCUIT DIAGRAM: Voltage and current Values entered.

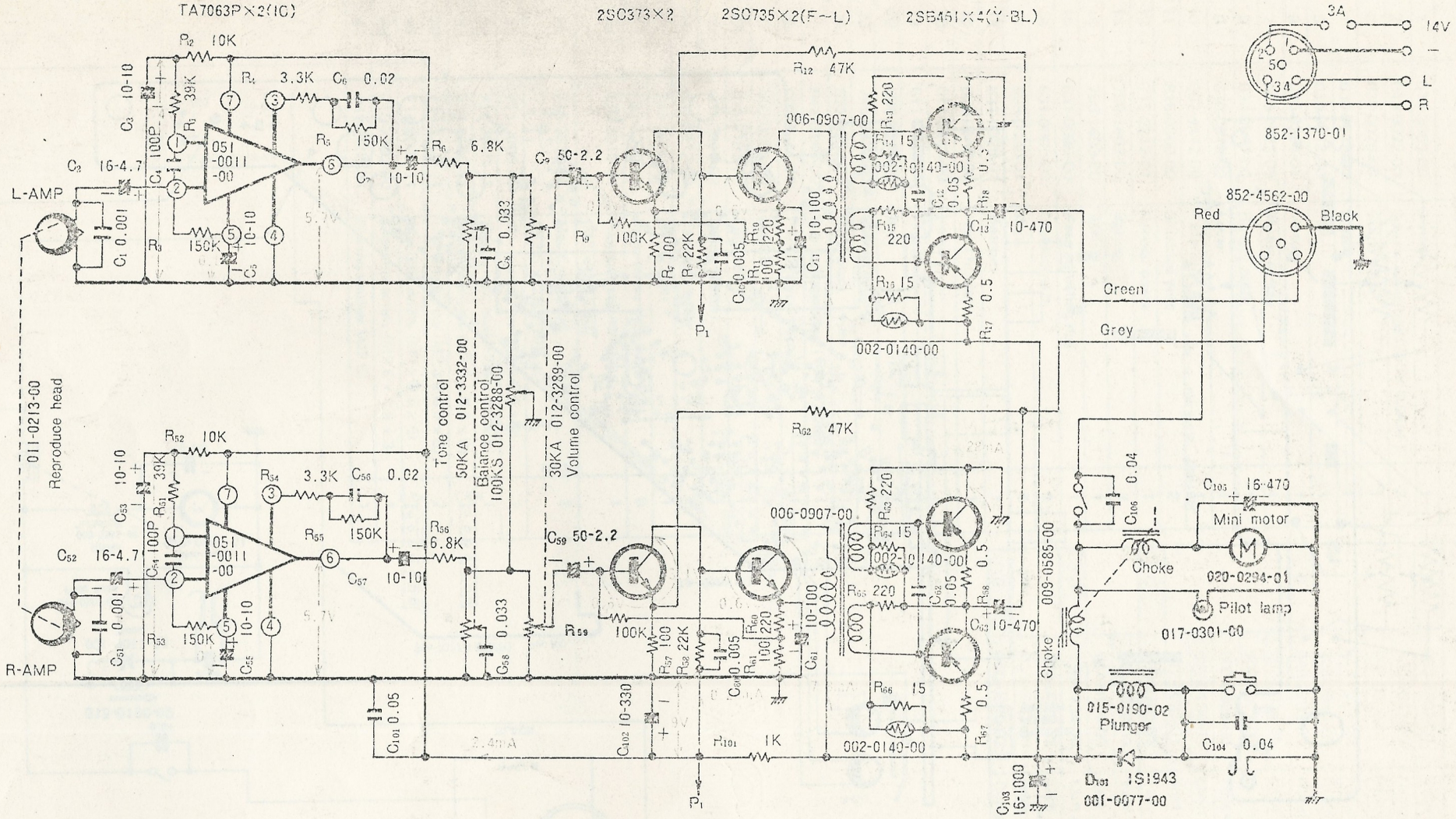

NOTE 1. Unless oterwise carbon film resistors ¼W±10%

NOTE 2. R_{13}, R_{15}, R_{63}, R_{65}

Carbon resistor ½W±5%

NOTE 3. Conduct measurements. Under no signal conditions with a tester having an internal resistance of 4KΩ/V and at the following ranges:

2.5V or greater 10Vrange

0.5V or greater 2.5Vrange

Below 0.5V 0.5Vrange

Measurement values may differ if measured the specified range.