TOSHIBA

STEREO CASSETTE DECK

PC-4360

For England/Australia

For Europe/Others

SPECIFICATIONS

Tape Speed:	1-7/8 ips. (4.8 cm/sec)
Track System:	4-track, 2-channel Stereo
Recording System:	AC Bias (85 kHz)
Erasing System:	AC Erasure
Frequency Response:	40 Hz to 12.5 kHz (DIN) (Europe) 30 Hz to 16 kHz (SA Tape) (England/Australia/Others)
Input Jacks:	Microphone Jack 0.25 mV (600 ohm to 10K ohm) Line in Jack 100 mV (over 50K ohm)
Output Jacks:	Line Out Jack 0.4 V (50K ohm) Headphones 1 mW (8 ohm)
Power Source:	AC 220V, 50 Hz (Europe) AC 240V, 50 Hz (England/Australia) AC 115/230V, 50/60 Hz (Others)
Power Consumption:	15 W
Semiconductors:	IC's ..... 8 Transistors ..... 12 Diodes 16
Signal-to-noise Ratio:	56 dB (DIN, TDK SA Tape) (Europe) 57 dB (SA Tape, Line peak level WTD) (England/Australia/Others) Dolby NR-IN mode improves SN radio by 5 dB and 10 dB respectively at 1 kHz and over 5 kHz.
Distortion Factor:	0.2% (DIN, TDK SA Tape) (Europe) 0.9% (0 dB, 400 Hz) (England/Australia/Others)
Wow and Flutter:	0.2% (DIN) (Europe) 0.07% (WTDRMS) (England/Australia/Others)
Fast Forwarding/Rewinding Time:	Within 105 sec. (Using C-60)
Dimensions:	400 (W) x 146 (H) x 310 (D) mm (Europe/Others) 430 (W) x 146 (H) x 310 (D) mm (England/Australia)
Weight:	Approx. 5 Kg (Europe/Others) 5.9 Kg (England/Others)

CONTENTS

	Page
1. BLOCK DIAGRAM	2
2. PARTS LOCATIONS	3
FRONT VIEW	3
REAR VIEW	3
3. DISASSEMBLY INSTRUCTIONS	4
TOP COVER REMOVAL	4
FRONT PANEL REMOVAL	4
4. ELECTRICAL ADJUSTMENTS	5 to 8
TEST EQUIPMENTS	5
RECORD/PLAYBACK HEAD ADJUSTMENT	5
PLAYBACK SENSITIVITY ADJUSTMENT	6
RECORD INPUT SENSITIVITY ADJUSTMENT	6
LEVEL METER ADJUSTMENT	7
BIAS LEAK ADJUSTMENT	7
RECORD/PLAYBACK FREQUENCY CHARACTERRISTIC ADJUSTMENT	8
RECORD/PLAYBACK SENSITIVITY ADJUSTMENT	8
5. ELECTRICAL PARTS LOCATIONS	9
6. SCHEMATIC DIAGRAM	10
7. MECHANICAL PARTS LOCATIONS	11
8. CABINET PARTS LOCATIONS	12
9. PARTS LIST	13 to 16

1. BLOCK DIAGRAM

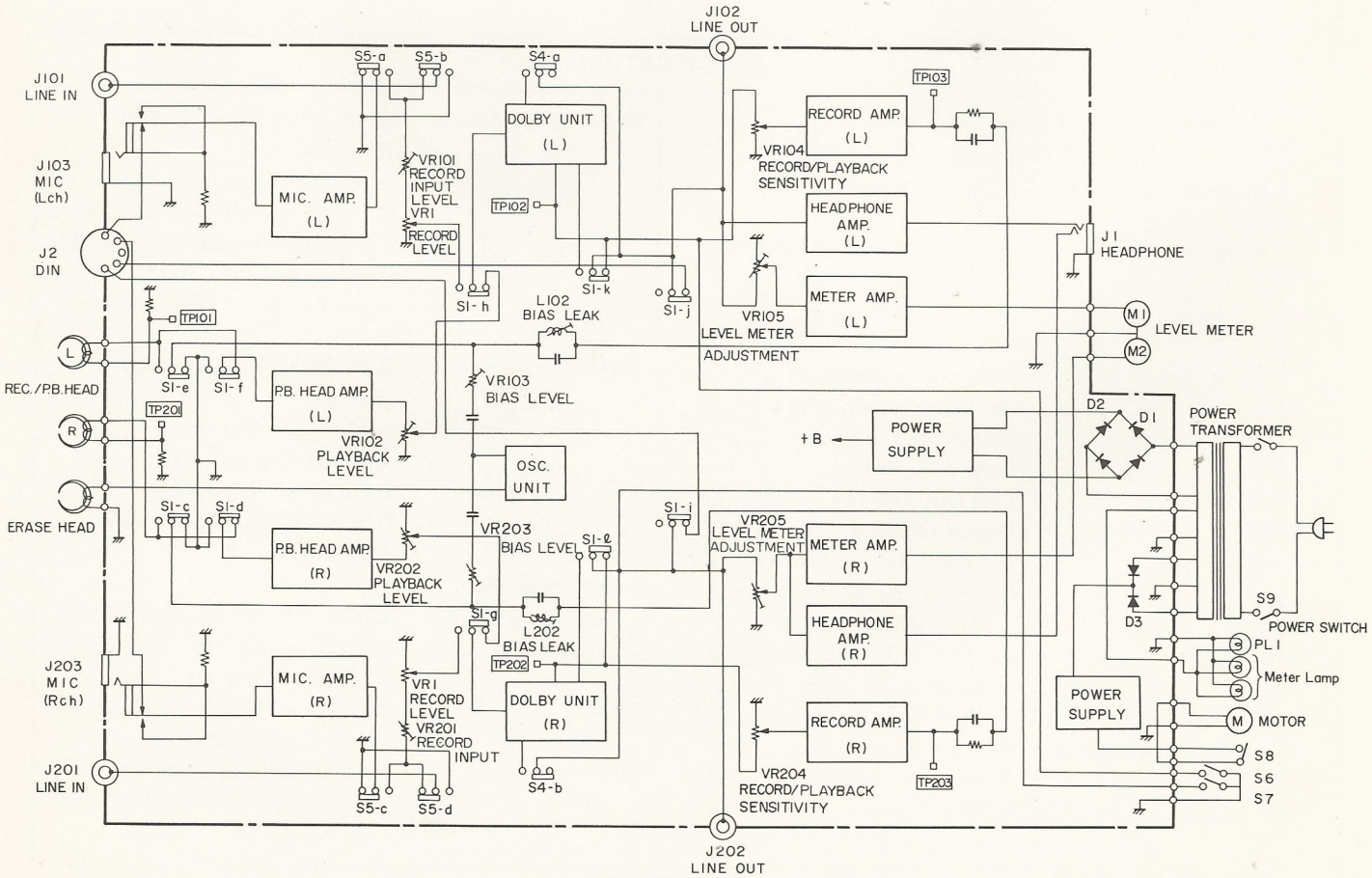

Figure 1

2. PARTS LOCATIONS

FRONT VIEW (The photograph is the set for England)

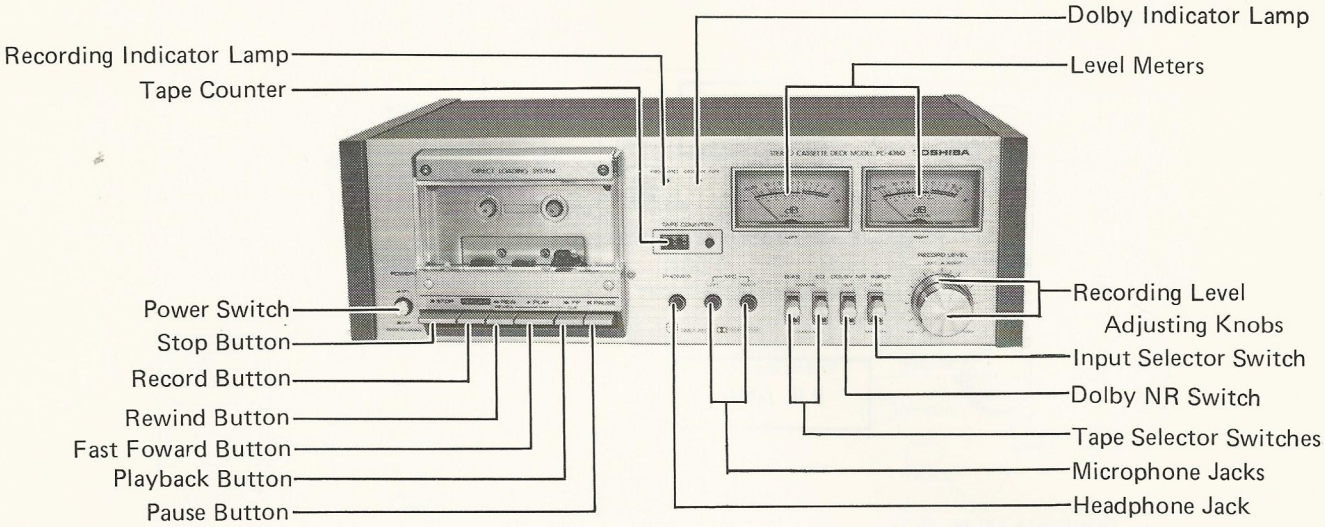

Figure 2

REAR VIEW (The photograph is the set for England)

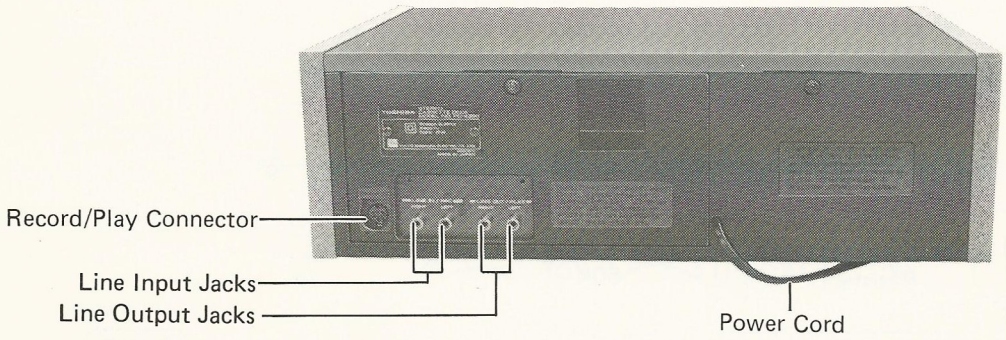

Figure 3

TOP COVER REMOVAL

For England/Australia

1. Remove 4 screws (①) and 2 screws (②). See figure 4.
2. Remove the top cover.

For Europe/Others

1. Remove 4 screws (③). See figure 5.
2. Remove the top cover.

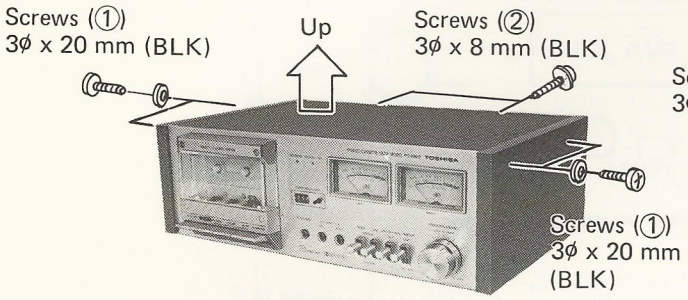

Figure 4

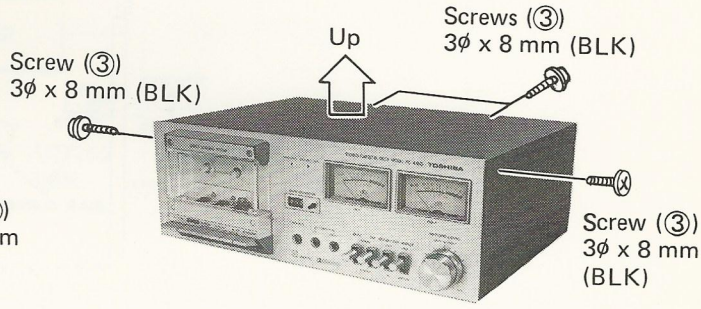

Figure 5

FRONT PANEL REMOVAL

1. Remove the top cover. See figures 4 and 5.
2. Remove 2 screws (④), 2 screws (⑤) and 1 screw (⑥). See figure 6.
3. Pull out the recording level adjusting knobs (⑦). See figure 6.
4. Pull out the lever switch knobs (⑧). See figure 6.
5. Remove 3 screws (⑨). See figure 7.

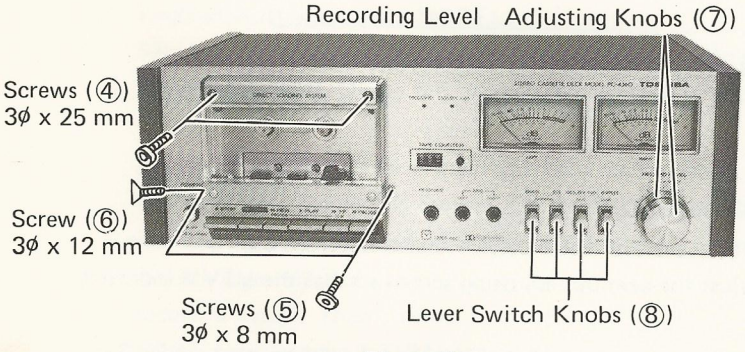

Figure 6

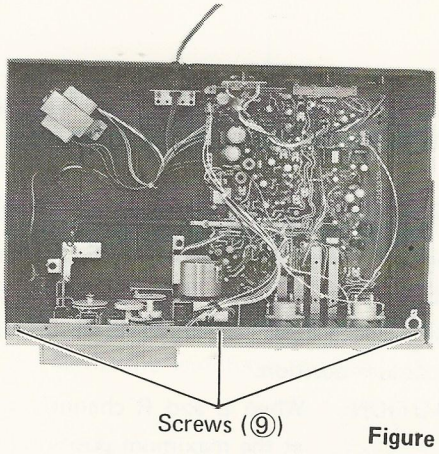

Figure 7

6. Remove 4 screws (⑩). See figure 8.
7. Remove the front panel.

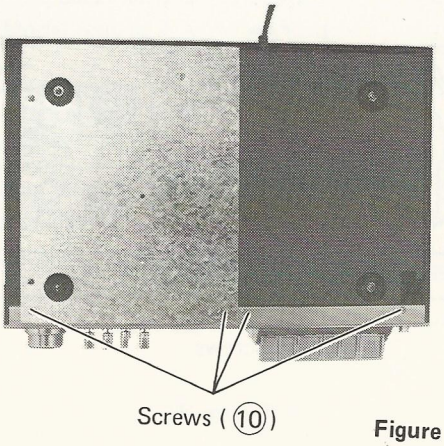

Figure 8

4. ELECTRICAL ADJUSTMENTS

TEST EQUIPMENTS

1. VTVM (Vacuum Tube Voltmeter)
2. Signal Generator
3. Resistance Attenuator
4. Screwdriver
5. Test Tapes
   MTT-114 (10 kHz)
   MTT-150 (400 Hz)
   MTT-502 (BLANK TAPE)

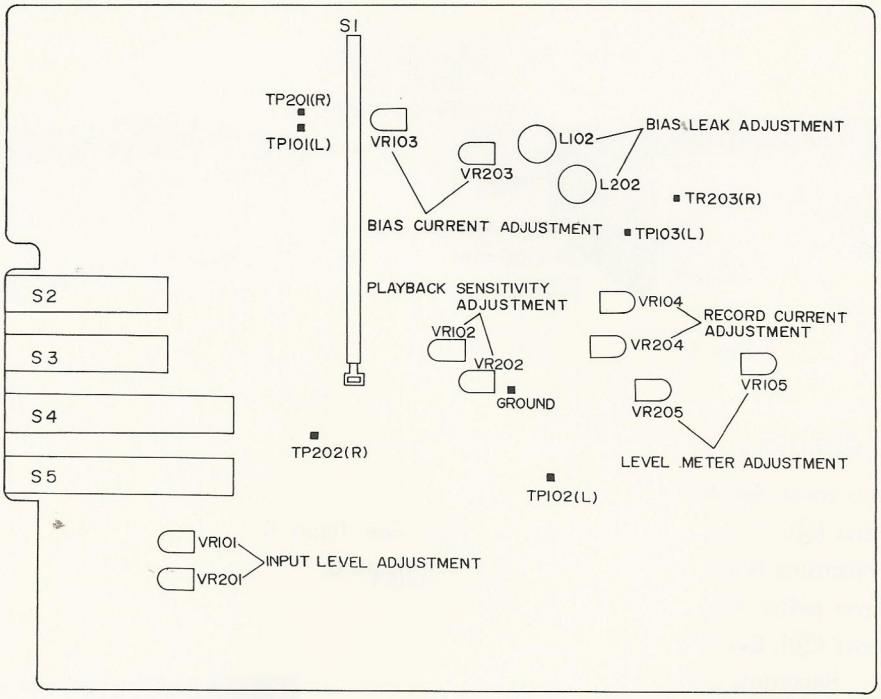

Figure 9. Test Points and Control Sections for Adjustment

RECORD/PLAYBACK HEAD ADJUSTMENT

1. Connect a VTVM across the LINE OUT jacks (J102 and J202).
2. Set the Tape Selector Switches (S2 and S3) to normal positions, Dolby NR Switch (S4) to OUT position.
3. Playback the Test Tape (MTT-114, 10 kHz) and adjust the azimuth adjusting screws so that the VTVM indicates maximum position.

   CAUTION: When L and R channels are measured at the same time, difference should be kept under 2 dB at the maximum position.

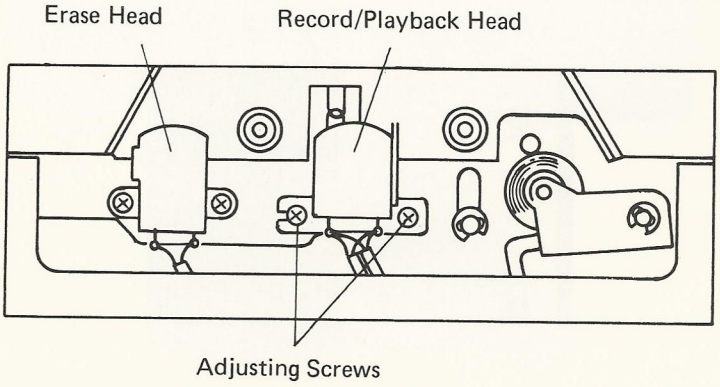

Figure 10.

PLAYBACK SENSITIVITY ADJUSTMENT

1. Connect a VTVM across the Test Points (TP102 and TP202).
2. Set the Tape Selector Switches (S2 and S3) to normal positions, and Dolby NR Switch (S4) to OUT position.
3. Playback the Test Tape (MTT-150) and adjust the Semi-fixed Resistors (VR102 and VR202) so that the VTVM indicates 580mV.

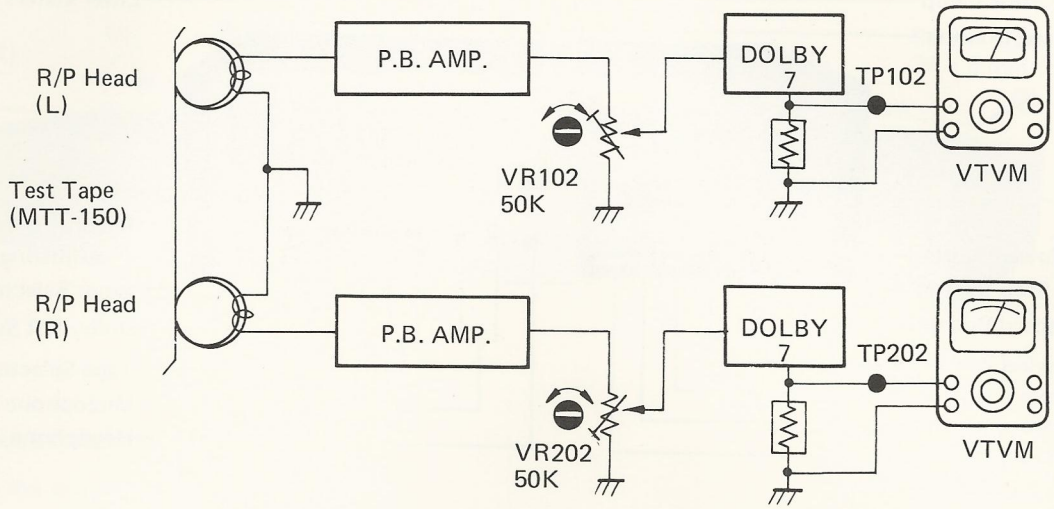

Figure 11.

RECORD INPUT SENSITIVITY ADJUSTMENT

1. Connect a VTVM across the Test Points (TP102 and TP202).
2. England/Australia/others MODEL:
   Set the Recording Level Adjusting Knobs to maximum positions, Tape Selector Switches (S2 and S3) to Normal Positions, Dolby NR Switch (S4) to OUT Position, and Input Selector Switch (S5) to LINE IN Position.
   Europe MODEL:
   Set the Recording Level Adjusting Knobs to maximum positions, Tape Selector Switches (S2 and S3) to Chrome Positions, and Dolby NR Switch (S4) to OUT Position.
3. Apply a signal of 400 Hz, -20 dBV (-27 dBV for Europe Model) through the LINE IN jack (Europe DIN jack).
4. Set the tape (MTT-502 for England/Australia/others model, AC-511 for Europe model) on the tape deck and record a signal. Then rewind and playback the recorded tape, and adjust the semi-fixed resistors (VR101 and VR201) so that the VTVM indicates 580mV.

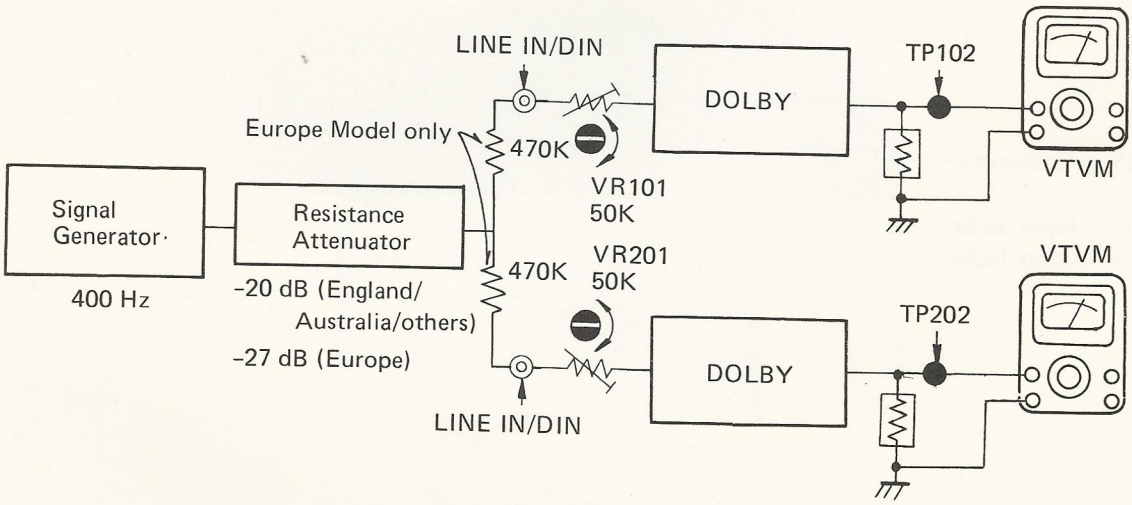

Figure 12.

LEVEL METER ADJUSTMENT

1. Set the Recording Level Adjusting Knobs to maximum positions and Dolby NR Switch (S4) to OUT Position.
2. England/Australia/others MODEL:
   Set the Tape Selector Switches (S2 and S3) to normal positions and Input Selector Switch (S5) to LINE IN Position.
   Europe MODEL:
   Set the Tape Selector Switches (S2 and S3) to chrome positions and Input Selector Switch (S5) to MIC/DIN Position.
3. Apply a signal of 400 Hz, -20 dBV (-27 dBV for Europe) through the LINE IN jack (DIN jack for Europe).
4. Set the Stereo Cassette Deck to recording mode and adjust the Semi-fixed Resistors (VR105 and VR205) so that the Level Motor indicates +3 dB.

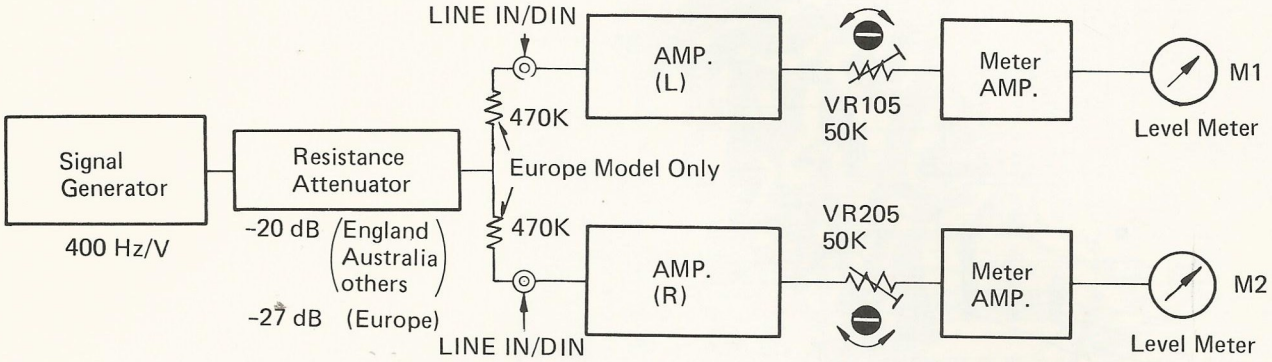

Figure 13.

BIAS LEAK ADJUSTMENT

1. Connect a VTVM across the Test Points (TP103 and TP203).
2. Set the Recording Level Adjusting Knobs to minimum positions and Dolby NR Switch (S4) to OUT Position.
3. England/Australia/others MODEL:
   Set the Tape Selector Switches (S2 and S3) to normal positions and Input Selector Switch (S5) to LINE IN Position.
   Europe MODEL:
   Set the Tape Selector Switches (S2 and S3) to chrome positions and Input Selector Switch (S5) to MIC/DIN Position.
4. Set the Stereo Cassette Deck to recording mode and adjust the Trap Coils (L102 and L202) so that the VTVM indicates minimum position.

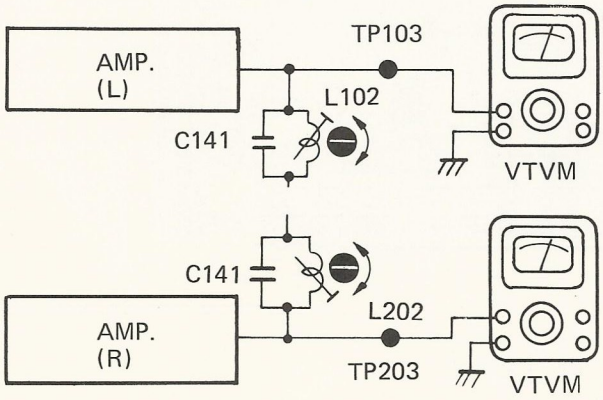

Figure 14.

RECORD/PLAYBACK FREQUENCY CHARACTERRISTIC ADJUSTMENT

1. Connect a VTVM across the LINE OUT jacks (J102 and J202).
2. Set the Dolby NR Switch (S4) to OUT position.
3. England/Australia/others MODEL: Set the Recording Level Adjusting Knobs to maximum positions, Tape Selector Switches (S2 and S3) to normal positions and Input Selector Switch (S5) to LINE IN position.
   Europe MODEL: Set the Tape Selector Switches (S2 and S3) to Chrome positions and Input Selector Switch (S5) to MIC/DIN position. Adjust the Recording Level Adjusting Knobs so that the Level Meter indicates -20 dB when applying a signal of 400 Hz -27 dB through MIC/DIN jack.
4. Apply a signal of 400 Hz/10 kHz, -20 dBV (-27 dBV for Europe Model) through the LINE IN jacks (DIN jack for Europe Model).
5. Set the tape (MTT-502 for England/Australia/others model and AC-511 for Europe model) on the cassette deck and record a signal of 400 Hz and 10 kHz. Then rewind and playback the tape and adjust the semi-fixed resistors (VR103 and VR203) so that the difference between 400 Hz and 10 kHz outputs is kept within ±1 dB.

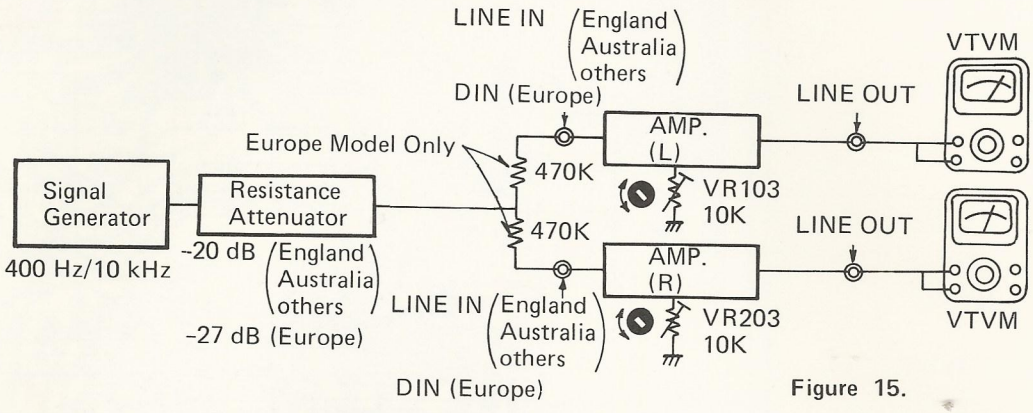

Figure 15.

RECORD/PLAYBACK SENSITIVITY ADJUSTMENT

1. Set the Recording Level Adjusting Knobs to maximum positions and Dolby NR Switch (S4) to OUT position.
2. England/Australia/others MODEL:
   Set the Tape Selector Switches (S2 and S3) to normal positions and Input Selector Switch (S5) to LINE IN position.
   Europe MODEL:
   Set the Tape Selector Switches (S2 and S3) to Chrome positions and Input Selector Switch (S5) to MIC/DIN position.
3. Apply a signal of 400 Hz -20 dBV (-27 dBV for Europe Model) through the LINE IN jacks (DIN jack for Europe Model).
4. Set the tape (MTT-502 for England/Australia/others model and AC-511 for Europe model) and record a signal of 400 Hz. Then rewind and playback the recorded tape and adjust the semi-fixed resistors (VR104 and VR204) so that the level meter indicates +3 dB.

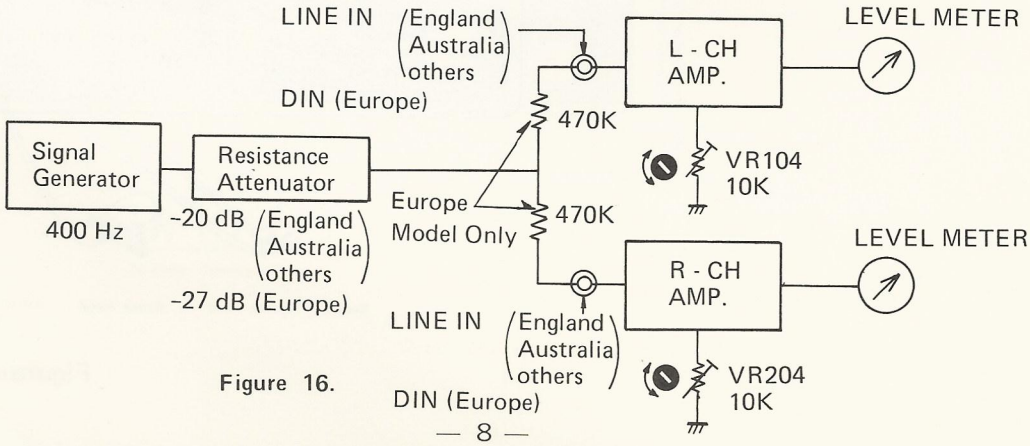

Figure 16.

5. ELECTRICAL PARTS LOCATIONS

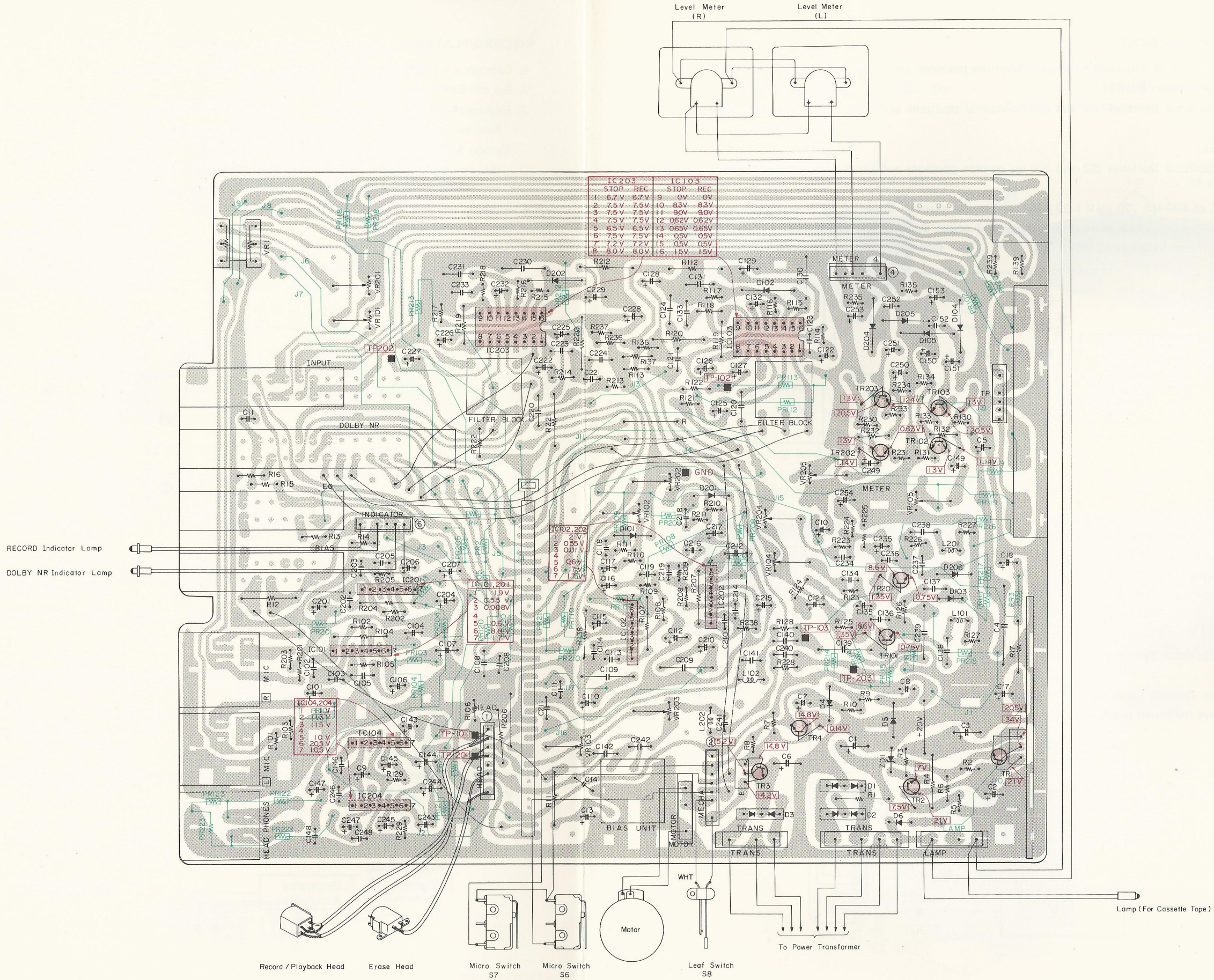

Figure 17. Bottom View of Main P.C. Boards

6. SCHEMATIC DIAGRAM

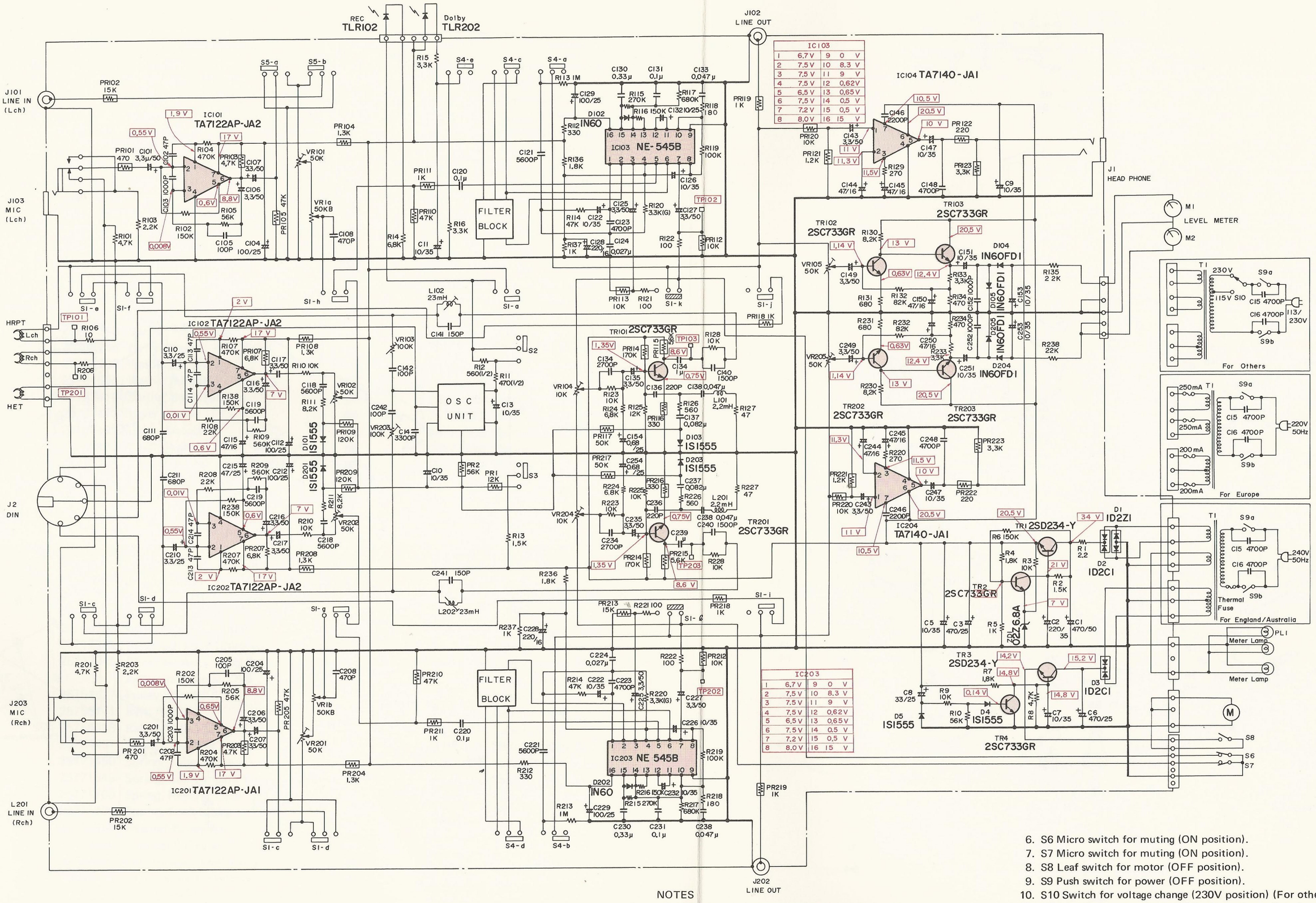

Figure 18.

NOTES

1. S1 Slide switch for record/playback change (Playback position).
2. S2 Lever switch for bias selector (Normal position).
3. S3 Lever switch for equalizer selector (Normal position).
4. S4 Lever switch for Dolby NR selector (Out position).
5. S5 Lever switch for Input selector (Line position).
6. S6 Micro switch for muting (ON position).
7. S7 Micro switch for muting (ON position).
8. S8 Leaf switch for motor (OFF position).
9. S9 Push switch for power (OFF position).
10. S10 Switch for voltage change (230V position) (For others)
11. Resistance values are indicated in ohm unless otherwise noted (K = 1000, M = 1000K).
12. Capacitance values are indicated in microfarads unless otherwise specified (P = micro-microfarads).
13. The voltage in squares are under no signal condition.

7. MECHANICAL PARTS LOCATIONS

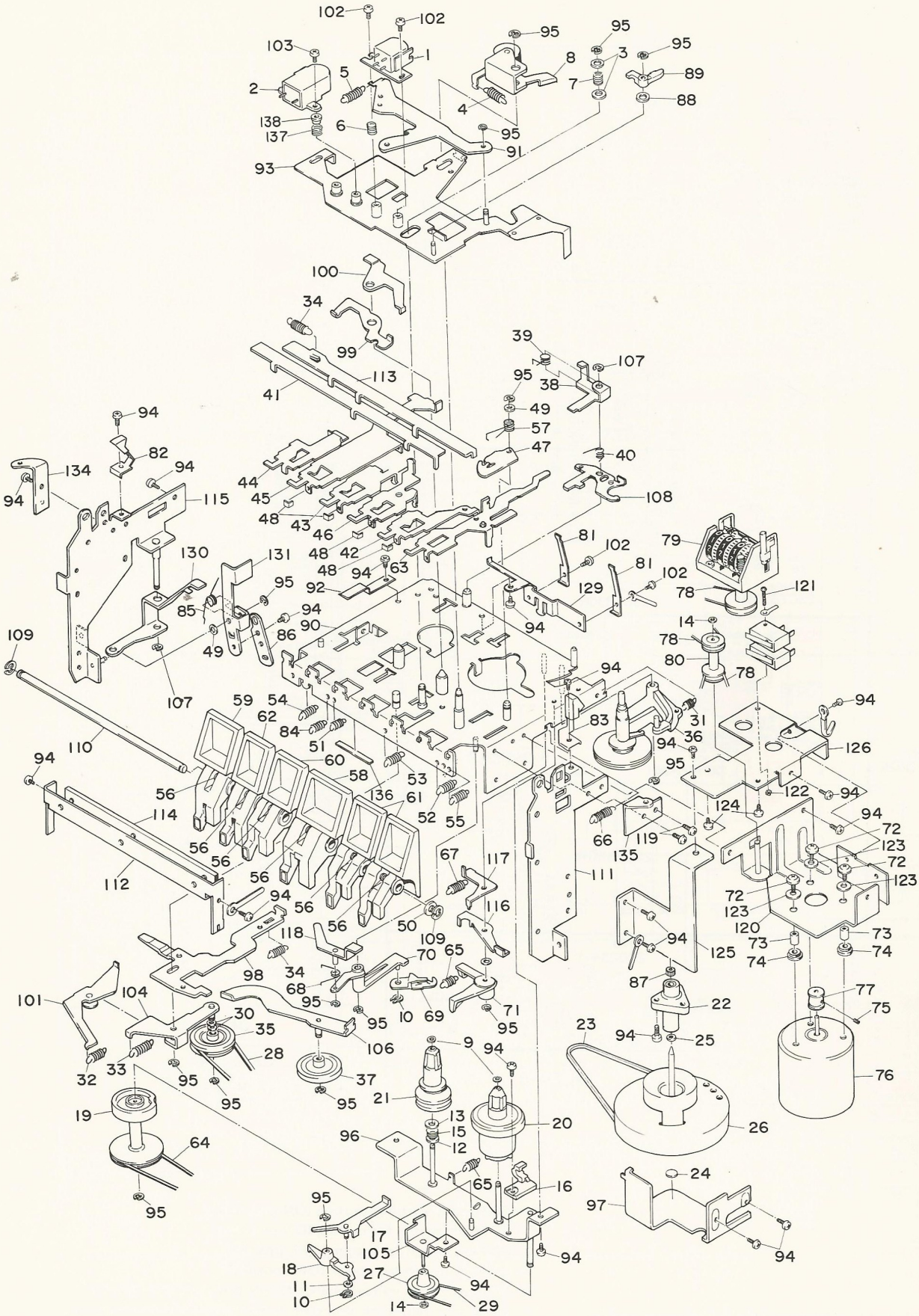

NOTE: Excluded parts in the Parts List are not available as replacement parts.

Figure 19. Exploded View (Mechanism)

8. CABINET PARTS LOCATIONS

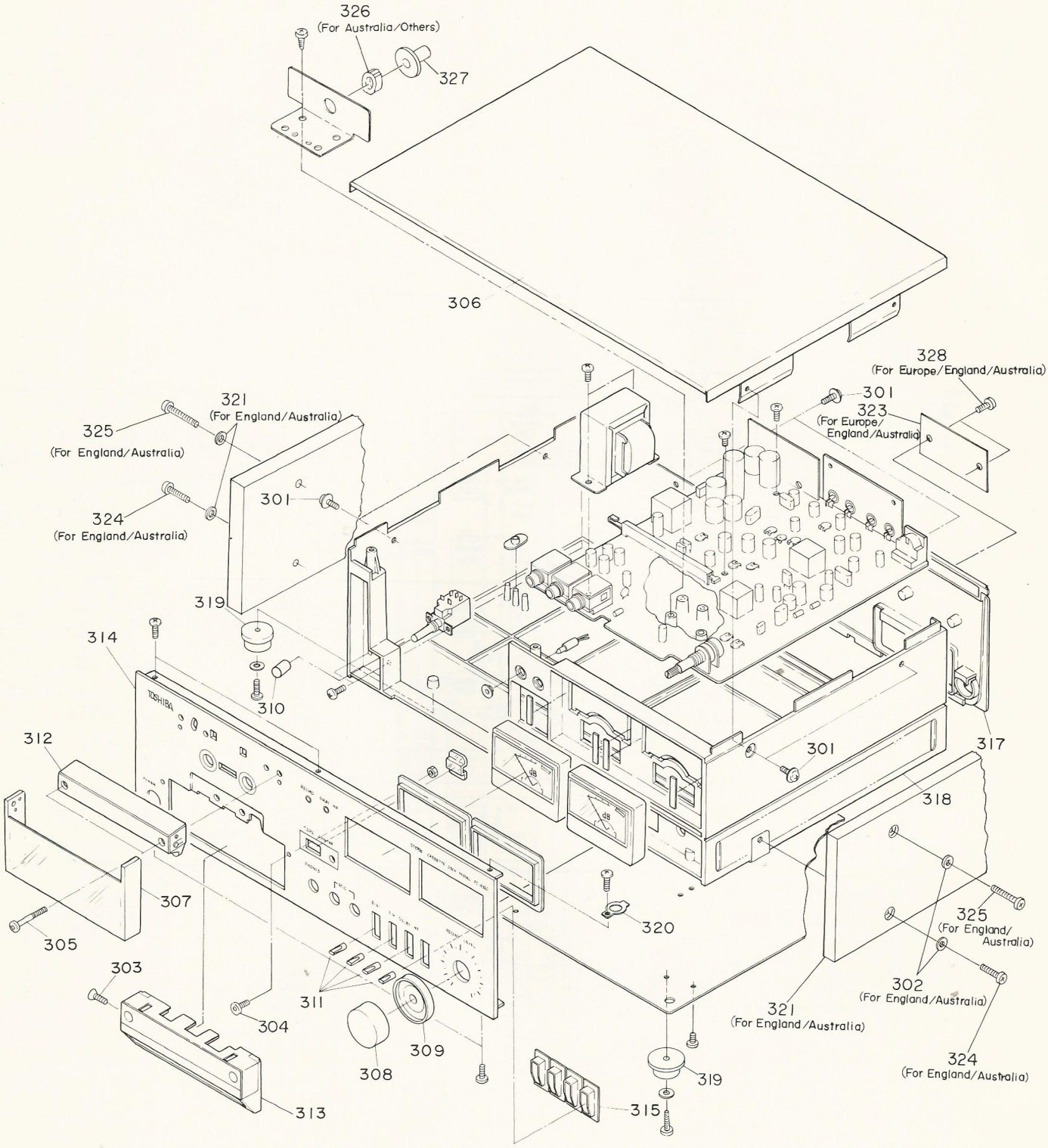

NOTE: Excluded parts in the Parts List are not available as replacement parts.

Figure 20. Exploded View (Cabinet)

9. PARTS LIST

Symbol No.	Part No.	Description
TRANSISTORS, DIODES AND ICS		
TR1, 3		Transistor, 2SD234-Y
TR2, 4		Transistor, 2SC733-GR
TR101, 201		Transistor, 2SC733-GR
TR102, 202		Transistor, 2SC733-GR
TR103, 203		Transistor, 2SC733-GR
D1		Diode, 1D2Z1
D2		Diode, 1D2C1
C3		Diode, 1D2C1
D4		Diode, 1S1555
D5		Diode, 1S1555
ZD1		Diode, 02Z6.8A
D101, 201		Diode, 1S1555
D102, 202		Diode, 1N60
D103, 203		Diode, 1S1555
D104, 204		Diode, 1N60-FD1
D105, 205		Diode, 1N60-FD1
		Diode, TLR102
IC101, 201		IC, TA7122AP-JA2
IC102, 202		IC, TA7122AP-JA2
IC103, 203	22114299	IC, NE545B
IC104, 204		IC, TA7140PJA-1
ELECTRICAL PARTS		
T1	22213526	Transformer, Power (Europe)
	22213525	Transformer, Power (England/Australia)
	22223063	Transformer, Power (Others)
S1	22145509	Switch, Slide, Record/Play
S2	22146220	Switch, Lever, BIAS
S3	22146220	Switch, Lever, EQ
S4	22146220	Switch, Lever, DOLBY NR
S5	22146248	Switch, Lever, INPUT
S6	22146731	Switch, Micro, Muting
S7	22146731	Switch, Micro, Muting
S8	22145985	Switch, Leaf, Motor
S9	22146295	Switch, Push, Power
S10	22146119	Switch, Voltage Select (Others)
M1, 2	22104350	Meter, Level
L101, 201	22232189	Coil, Trap (2.2mH)
L102, 202	22232143	Coil, Trap (23mH)
J101, 102 201, 202	22163555	Jack, PIN
J103, 203	22163517	Jack, Microphone, 6ϕ
J1	22163530	Jack, Headphone, 6ϕ
J2	22163538	Jack, DIN
PL1	22113397	Lamp, 14V, 80mA
	22132524	Oscillator Unit
	22137752	Filter Block
	22144289	Fuse, 250mA, 250V
	22144340	Fuse, 200mA, 250V
	22176286	Cord, Power (Europe)
	22176536	Cord, Power (England)
	22176489	Cord, Power (Australia)
	22176114	Cord, Power (Others)
CAPACITORS G = ±2%, J = ±5%, K = ±10%, M = ±20%		
C1	22448471	Electrolytic, 470mfd, 50V
C2	22447221	Electrolytic, 220mfd, 35V
C3	22446471	Electrolytic, 470mfd, 25V
C5	22447100	Electrolytic, 10mfd, 35V
C6	22446471	Electrolytic, 470mfd, 25V
C7	22447100	Electrolytic, 10mfd, 35V
C8	22446330	Electrolytic, 33mfd, 25V
C9	22447100	Electrolytic, 10mfd, 35V
C10	22447100	Electrolytic, 10mfd, 35V
C11	22447100	Electrolytic, 10mfd, 35V
C13	22447100	Electrolytic, 10mfd, 35V
C14	22385332	Polystyrene, 3300pF, 250V, K
C101, 201	22448339	Electrolytic, 3.3mfd, 50V
C102, 202	22362470	Ceramic, 47pF, 50V, K
C103, 203	22343102	Ceramic, 1000pF, 50V, M
C104, 204	22446101	Electrolytic, 100mfd, 25V
C105, 205	22362101	Ceramic, 100pF, 50V, K
C106, 206	22448339	Electrolytic, 3.3mfd, 50V
C107, 207	22448339	Electrolytic, 3.3mfd, 50V
C108, 208	22343471	Ceramic, 470pF, 50V, M
C110, 210	22440099	Electrolytic, 3.3mfd, 25V
C111, 211	22321030	Film, 680pF, 50V, K
C112, 212	22446101	Electrolytic, 100mfd, 25V
C113, 213	22362470	Ceramic, 47pF, 50V, K
C114, 214	22362470	Ceramic, 47pF, 50V, K
C115, 215	22445470	Electrolytic, 47mfd, 16V
C116, 216	22448339	Electrolytic, 3.3mfd, 50V
C117, 217	22448339	Electrolytic, 3.3mfd, 50V
C118, 218	22371562	Mylar, 5600pF, 50V, J
C119, 219	22371562	Mylar, 5600pF, 50V, J
C120, 220	22372104	Mylar, 0.1mfd, 50V, K
C121, 221	22370149	Mylar, 5600pF, 100V, G
C122, 222	22447100	Electrolytic, 10mfd, 35V
C123, 223	22370150	Mylar, 4700pF, 100V, G
C124, 224	22370148	Mylar, 0.027mfd, 100V, G
C125, 225	22448339	Electrolytic, 3.3mfd, 50V
C126, 226	22447100	Electrolytic, 10mfd, 35V
C127, 227	22448339	Electrolytic, 3.3mfd, 50V
C128, 228	22445221	Electrolytic, 220mfd, 16V
C129, 229	22446101	Electrolytic, 100mfd, 25V
C130, 230	22372334	Mylar, 0.33mfd, 50V, K
C131, 231	22372104	Mylar, 0.1mfd, 50V, K
C132, 232	22447100	Electrolytic, 10mfd, 35V
C133, 233	22371473	Mylar, 0.047mfd, 50V, J
C134, 234	22372272	Mylar, 2700pF, 50V, K
C135, 235	22448339	Electrolytic, 3.3mfd, 50V
C136, 236	22362221	Ceramic, 220pF, 50V, K

Symbol No.	Part No.	Description
C137, 237	22372823	Mylar, 0.082mfd, 50V, K
C138, 238	22371473	Mylar, 0.047mfd, 50V, J
C139, 239	22370169	Polyester Film, 1mfd, 100V, K
C140, 240	22372152	Mylar, 1500pF, 50V, K
C141, 241	22321080	Film, 150pF, 50V, K
C142, 242	22321079	Film, 100pF, 50V, K
C143, 243	22448339	Electrolytic, 3.3mfd, 50V
C144, 244	22445470	Electrolytic, 47mfd, 16V
C145, 245	22445470	Electrolytic, 47mfd, 16V
C146, 246	22372222	Mylar, 2200pF, 50V, K
C147, 247	22447100	Electrolytic, 10mfd, 35V
C148, 248	22372472	Mylar, 4700pF, 50V, K
C149, 249	22448339	Electrolytic, 3.3mfd, 50V
C150, 250	22445470	Electrolytic, 47mfd, 16V
C151, 251	22447100	Electrolytic, 10mfd, 35V
C152, 252	22343102	Ceramic, 1000pF, 50V, M
C153, 253	22447100	Electrolytic, 10mfd, 35V
C154, 254	22440024	Electrolytic, 0.68mfd, 25V

RESISTORS

All resistors are ¼W, 5%, carbon film unless otherwise noted. G = ±2%, J = ±5%, K = ±10%

R1	22545229	2.2 ohm
R2	22555152	1.5K ohm
R3	22555103	10K ohm
R4	22545182	1.8K ohm
R5	22555102	1K ohm
R6	22555154	150K ohm
R7	22555182	1.8K ohm
R8	22555472	4.7K ohm
R9	22555103	10K ohm
R10	22555563	56K ohm
R11	22563471	Solid, 470 ohm, ½W, K
R12	22563561	Solid, 560 ohm, ½W, K
R13	22555152	1.5K ohm
R14	22555682	6.8K ohm
R15	22555332	3.3K ohm
R16	22555332	3.3K ohm
R101, 201	22555472	4.7K ohm
R102, 202	22555154	150K ohm
R103, 203	22555222	2.2K ohm
R104, 204	22541474	470K ohm
R105, 205	22555563	56K ohm
R106, 206	22555100	10 ohm
R107, 207	22541474	470K ohm
R108, 208	22555223	22K ohm
R109, 209	22555564	560K ohm
R110, 210	22555103	10K ohm
R111, 211	22555822	8.2K ohm
R112, 212	22563331	Solid, 330 ohm, ½W, K
R113, 213	22555105	1M ohm
R114, 214	22555473	47K ohm
R115, 215	22555274	270K ohm
R116, 216	22555154	150K ohm
R117, 217	22555684	680K ohm
R118, 218	22555181	180 ohm
R119, 219	22555104	100K ohm
R120, 220	22540011	3.3K ohm
R121, 221	22555101	100 ohm
R122, 222	22555101	100 ohm
R123, 223	22555103	10K ohm
R124, 224	22555682	6.8K ohm
R125, 225	22555123	12K ohm
R126, 226	22555561	560 ohm
R127, 227	22555470	47 ohm
R128, 228	22555103	10K ohm
R129, 229	22555271	270 ohm
R130, 230	22555822	8.2K ohm
R131, 231	22555681	680 ohm
R132, 232	22555823	82K ohm
R133, 233	22555332	3.3K ohm
R134, 234	22555471	470 ohm
R135, 235	22555223	22K ohm
R136, 236	22555182	1.8K ohm
R137, 237	22555102	1K ohm
R138, 238	22555154	150K ohm

VARIABLE RESISTORS

VR1	22650433	Variable, 50K ohm
VR101, 201	22658130	Semi-fixed, 50K ohm
VR102, 202	22658130	Semi-fixed, 50K ohm
VR103, 203	22658155	Semi-fixed, 100K ohm
VR104, 204	22658129	Semi-fixed, 10K ohm
VR105, 205	22658130	Semi-fixed, 50K ohm

PRINTED RESISTORS

PR1		12K ohm
PR2		56K ohm
PR3		100K ohm
PR101, 201		470 ohm
PR102, 202		15K ohm
PR103, 203		4.7K ohm
PR104, 204		1.3K ohm
PR105, 205		47K ohm
PR107, 207		6.8K ohm
PR108, 208		1.3K ohm
PR109, 209		120K ohm
PR110, 210		47K ohm
PR111, 211		1K ohm
PR112, 212		10K ohm
PR113, 213		10K ohm
PR114, 214		170K ohm
PR115, 215		5.6K ohm
PR116, 216		330 ohm
PR117, 217		50K ohm
PR118, 218		1K ohm
PR119, 219		1K ohm

Symbol No.	Part No.	Description
PR120, 220		10K ohm
PR121, 221		1.2K ohm
PR122, 222		220 ohm
PR123, 223		3.3K ohm
MECHANICAL PARTS		
1	22217245	Head, Record/Playback
2	22218186	Head, Erase
3	25764360	Washer, 3ø
4	25771704	Spring, Pressure Roller
5	25771805	Spring, Head Chassis
6	25772240	Spring, Head
7	25772397	Spring, Head Chassis
8	25717348	Pressure Roller Ass'y
9	25735159	E Washer, Reel Plate
10	25735197	G Washer
11	25761340	Spacer, Push Lever
12	25764246	Nylon Washer, Reel Plate
13	25764506	Washer, Reel Plate
14	25764505	Washer, Middle Pulley
15	25772414	Spring, Back Tension
16	25781173	Lever, Guide
17	25782182	Lever, Detection
18	25782183	Lever, Push
19	25713401	Cam-wheel Ass'y
20	25713425	Reel Plate, Take-up
21	25713426	Reel Plate, Supply
22	25718164	Holder, Capstan (Europe)
	25718175	Holder, Capstan (England/ Australia/Others)
23	25755361	Belt, Drive (Europe)
	25755335	Belt, Drive (England/Australia/ Others)
24	25764386	Washer, Flywheel
25	25764398	Washer, Capstan Shaft
26	25717368	Flywheel Ass'y (Europe)
	25717349	Flywheel Ass'y (England/ Australia/Others)
27	25751527	Pulley, Middle
28	25755171	Belt, Rewind
29	25755328	Belt, Middle Pulley
30	25764457	Washer, Rewind Lever
31	25771450	Spring, Take-up Lever
32	25771849	Spring, Fast-forward Lever
33	25771705	Spring, Rewind Lever
34	25771726	Spring, Lock Slider
35	25713394	Rewind Pulley Ass'y
36	25713395	Take-up Pulley Ass'y
37	25713400	Fast-forward Idler Ass'y
38	25748178	Lever, Erase Prevention
39	25773259	Spring, Lever
40	25773310	Spring, Prevention Lever
41	25741395	Slider, Lock
42	25741401	Operation Plate, Fast-forward

Symbol No.	Part No.	Description
43	25741425	Operation Plate, Rewind
44	25741460	Operation Plate, Stop
45	25741483	Operation Plate, Record
46	25741484	Operation Plate, Play
47	25742576	Lock Plate, Pause
48	25761295	Cushion, Push Button
49	25764400	Nylon Washer
50	25764404	Nylon Washer, Push Lever
51	25771405	Spring
52	25771850	Spring
53	25771754	Spring
54	25771778	Spring
55	25771779	Spring
56	25773229	Spring, Push Lever
57	25773311	Spring, Pause Lock Plate
58	25836476	Push Button, Play
59	25836477	Push Button, Stop
60	25836529	Push Button, Rewind
61	25836530	Push Button, FF/Pause
62	25836531	Push Button, Record
63	25719221	Operation Plate, Pause
64	25755272	Belt, Cam-wheel
65	25771860	Spring, Reel Chassis
66	25771586	Spring
67	25771780	Spring, ASO Lever
68	25773268	Spring, ASO Select
69	25782184	Lever, ASO
70	25782186	Lever, Release
71	25782201	Lever, Bias
72	22707018	Screw (PAN), 2.6ø x 8mm
73	25733463	Spacer, Motor
74	25761238	Cushion, Motor
75	22701344	Screw, 2.6ø x 4mm
76	22125660	DC Motor (Europe)
	22125648	DC Motor (England/Australia/ Others)
77	25751554	Pulley, Motor (Europe)
	25751525	Pulley, Motor (England/Australia/ Others)
78	25755336	Belt, Counter
79	25873143	Tape Counter
80	25713428	Middle Pulley Ass'y
81	25774461	Spring, Cassette Hold
82	25719319	Pawl Ass'y, Left
83	25719320	Pawl Ass'y, Right
84	25771662	Spring
85	25773285	Spring, Record Lever
86	25782124	Holder, Spring
87	25756143	Gear, Waiting
88	25764476	Washer, Waiting Lever
89	25782221	Lever, Waiting
94	70432605	Screw, 2.6ø x 5mm
95	74050020	E Washer, 2ø
102	70432004	Screw, 2ø x 4mm

Symbol No.	Part No.	Description
103	70432005	Screw, 2ø x 5mm
113	25741499	Slider, Lock
119	70432604	Screw, 2.6ø x 4mm
121	70432016	Screw, 2ø x 16mm
122	73602000	Nut, 2ø
123	74001026	Washer, 2.6ø
137	25726489	Sleeve, Erase Head
138	25772438	Spring, Erase Head
	CABINET PARTS	
301	22701495	Screw, 3ø x 8mm
302	22703143	Washer, 4ø
303	22707024	Screw (FLT), 3ø x 12mm
304	22707028	Screw, 3ø x 8mm
305	22707050	Screw, 3ø x 25mm
306	25822473	Cover, Top
307	25822571	Cover, Cassette
308	25836547	Knob, Record Level (L)
309	25836548	Knob, Record Level (R)
310	22824176	Knob, Power
311	22824196	Knob, Lever
312	25810129	Hinge Ass'y
313	25817612	Head Cover Ass'y
314	25819390	Panel Ass'y
315	22833308	Cover, Lever Knob
317	25822537	Cover, Jack (Europe/England/ Australia)
	25822581	Cover, Jack (Others)
318	25817613	Bottom Cabinet Ass'y (Europe/Others)
	25817618	Bottom Cabinet Ass'y (England/Australia)
319	22828031	Leg, Rubber
320	25774441	Plate, Ground
321	22851094	Side Plate, Right (England/Australia)
	22851095	Side Plate, Left (England/Australia)
323	25827574	Nameplate (Europe)
	25827575	Nameplate (England/Australia)
324	22707030	Screw (BID), 3ø x 16mm (Europe/Australia)
325	22707127	Screw (BID), 3ø x 20mm (Europe/Australia)
327	25761320	Bush, Power Cord
328	22701326	Screw, 3ø x 8mm (Europe/England/Australia)
	ACCESSORIES	
	22170109	Junction Cord (TSC-20)
	22954442	Owner's Manual (Europe)
	22954443	Owner's Manual (England/ Australia)

Symbol No.	Part No.	Description
	22954445	Owner's Manual (Others)
	22990374	Cleaner, Head
	22105333	Audition Tape
	22167658	Adaptor, AC Plug