PHILIPS Service notes

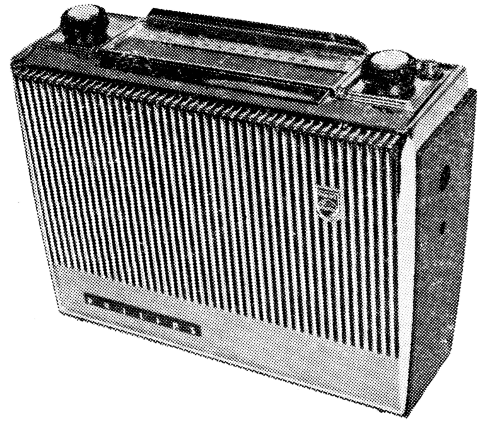

MODEL PA1

SPECIFICATIONS

Tuning range	525-1605 kc/s
Intermediate frequency	455 kc/s
Power supply—battery	type 2761 (9V)
Battery consumption	11.5-13.5 mA (no signal)

PRINTED BOARD REMOVAL

Remove case rear and control knobs.
Unscrew telescopic aerial at base and push through grommet of front escutcheon until clear of board assembly.

Unsolder anti-hash earth braid from external aerial socket.

Remove four mounting screws and case rear retaining bracket.

Turn cursor to low frequency end of dial and carefully withdraw board assembly at tuning spindle end until latter is clear of front escutcheon.

To withdraw switch pot spindle from escutcheon, pivot board upwards through 90° at the same time releasing cursor from in front of dial scale until middle bracket is clear of speaker magnet. Board assembly is now readily accessible from either side.

Refitting is a reversal of the foregoing procedure, but it is also necessary to guide dial cord to top side of mounting post when lowering board assembly to mounting position.

N.B. Anti-hash earth braid to be soldered as short as possible.

ALIGNMENT

The location of the various trimming points used in alignment is shown in an inset drawing on the circuit diagram drawing.

I.F. Alignment

Fully open tuning capacitor, apply signal generator at 455 kc/s through I.F. dummy to TR1 base.
Put volume control at maximum.
Peak cores (in the lower position) of I.F. transformers in the order of 3rd, 2nd and 1st. Recheck these adjustments.

R.F. Alignment

Close the tuning capacitor and position the dial cursor to the stop mark on the dial scale. Apply the signal generator to the aerial socket through a dummy consisting of a capacitor of 120pF across the socket and another of 15pF in series with the generator lead. Close the telescopic aerial. Put volume control at maximum.
Adjust generator and tune receiver to 600 kc/s (mark on dial scale) and peak oscillator and aerial coils.
Adjust generator and tune receiver to 1500 kc/s (mark on dial scale) and peak oscillator and aerial trimmers.
Repeat above adjustments until tracking is satisfactory.

December, 1963

PUBLISHED BY PHILIPS ELECTRICAL INDUSTRIES PTY. LTD.
Branches in All States

ELECTRICAL PARTS LIST

CAPICITORS

No.	DESCRIPTION	V.W.	TOL. ±%	TYPE OR CODE No.
1, 2	Tuning capacitor and			CZ.107.607
3, 4	trimmers			MSP type K2XT
5	4.7nF ceramic	25	+80—20	Ducon CDR
6	10nF met. paper	200	20	A.E.E. type W99
7	Part of 1st I.F.T.			
8	100nF ceramic	25	+80—20	Ducon CDR
9	100nF ceramic	25	+80—20	Ducon CDR
10	160uF electrolytic	2.5	—	Philips C.426.AR/A160
11	Part of 2nd I.F.T.			
12	100nF ceramic	25	+80—20	Ducon CDR
13	100nF ceramic	25	+80—20	Ducon CDR
14	Part of 3rd I.F.T.			
15	100nF ceramic	25	+80—20	Ducon CDR
16	320uF electrolytic	6.4	—	Philips C.426.AR/C320
17	100nF ceramic	25	+80—20	Ducon CDR
18	1nF Styroseal	200	20	Ducon DFB
19	100nF ceramic	25	+80—20	Ducon CDR
20	40nF paper	200	20	A.E.E. W99
21	0.1uF ceramic	25	+80—20	Ducon CDR
22	470nF ceramic	25	+80—20	Ducon CDR
23	80uF electrolytic	2.5	—	Philips C.426.AR/A80
24	200uF electrolytic	10	—	Philips C.426.AR/D200
25	200uF electrolytic	10	—	Philips C.426.AR/D200
28	150pF cer., N150	70	2	Philips C.302.CC/C150E
29	3.9pF cer., P100	70	0.5	Philips C.302.CA/L3E9
30	4.7pF cer., P100	70	0.5	Philips C.302.CA/L4E7
31	4.7pF cer., N1500	—	0.5pF	Ducon CDS
32	15pF cer., NPO	70	1pF	Philips C.302.CB/M15E

RESISTORS

No.	DESCRIPTION	W.	TOL. ±%	TYPE OR CODE No.
1	6,800 Ω carbon	½	10	I.R.C. B.T.S.
2	33k Ω carbon	½	10	I.R.C. B.T.S.
3	10 Ω carbon	½	10	I.R.C. B.T.S.
4	2,200 Ω carbon	½	10	I.R.C. B.T.S.
5	1,800 Ω carbon	½	10	I.R.C. B.T.S.
6	22k Ω carbon	½	10	I.R.C. B.T.S.
7	8,200 Ω carbon	½	10	I.R.C. B.T.S.
8	100k Ω carbon	½	10	I.R.C. B.T.S.
9	2,200 Ω carbon	½	10	I.R.C. B.T.S.
10	330 Ω carbon	½	10	I.R.C. B.T.S.
11	8,200 Ω carbon	½	10	I.R.C. B.T.S.
12	27k Ω carbon	½	10	I.R.C. B.T.S.
14	1,000 Ω carbon	½	10	I.R.C. B.T.S.
15	470 Ω carbon	½	10	I.R.C. B.T.S.
16	3,300 Ω carbon	½	10	I.R.C. B.T.S.
17	33k Ω carbon	½	10	I.R.C. B.T.S.
18	470 Ω carbon	½	10	I.R.C. B.T.S.
19	820 Ω carbon	½	10	I.R.C. B.T.S.
20	220 Ω carbon	½	10	I.R.C. B.T.S.
21	330 Ω carbon	½	10	I.R.C. B.T.S.
22	250k Ω carbon potentiometer, reverse log, taper, with D.P.S.T. rotary switch (volume)			CZ.032.048 I.R.C. series 200
23	10k Ω carbon	½	10	I.R.C. B.T.S.
24	12 Ω carbon	½	10	I.R.C. B.T.S.
25	27k Ω carbon	½	10	I.R.C. B.T.S.
26	560 Ω carbon	½	10	I.R.C. B.T.S.
27	820 Ω carbon	½	10	I.R.C. B.T.S.
28	390 Ω carbon	½	10	I.R.C. B.T.S.
29	1,800 Ω carbon	½	5	I.R.C. B.T.S.
30	120 Ω carbon	½	10	I.R.C. B.T.S.
31	1,800 Ω carbon	½	5	I.R.C. B.T.S.
32	120 Ω carbon	½	10	I.R.C. B.T.S.
35	100k Ω carbon	½	10	I.R.C. B.T.S.

INDUCTORS

No.	DESCRIPTION	TYPE OR CODE No.
1, 2	Aerial coil	CZ.323.068
	Adj. core for above	A3.960-20
3, 4, 5	Oscillator coil	CZ.330.620
6, 7, 8	1st I.F.T.	CZ.320.520
9, 10, 11	2nd I.F.T.	CZ.320.524
12, 13, 14	3rd I.F.T.	CZ.320.467
15, 16, 17	Driver transformer, 2,500/700+700 Ω	CZ.345.828 Rola JDR68
18	Speaker, 15 Ω, Rola 4F	CZ.161.009
19	Aerial choke, 4.7 uH	CZ.122.707 I.R.C. CLA

PA1

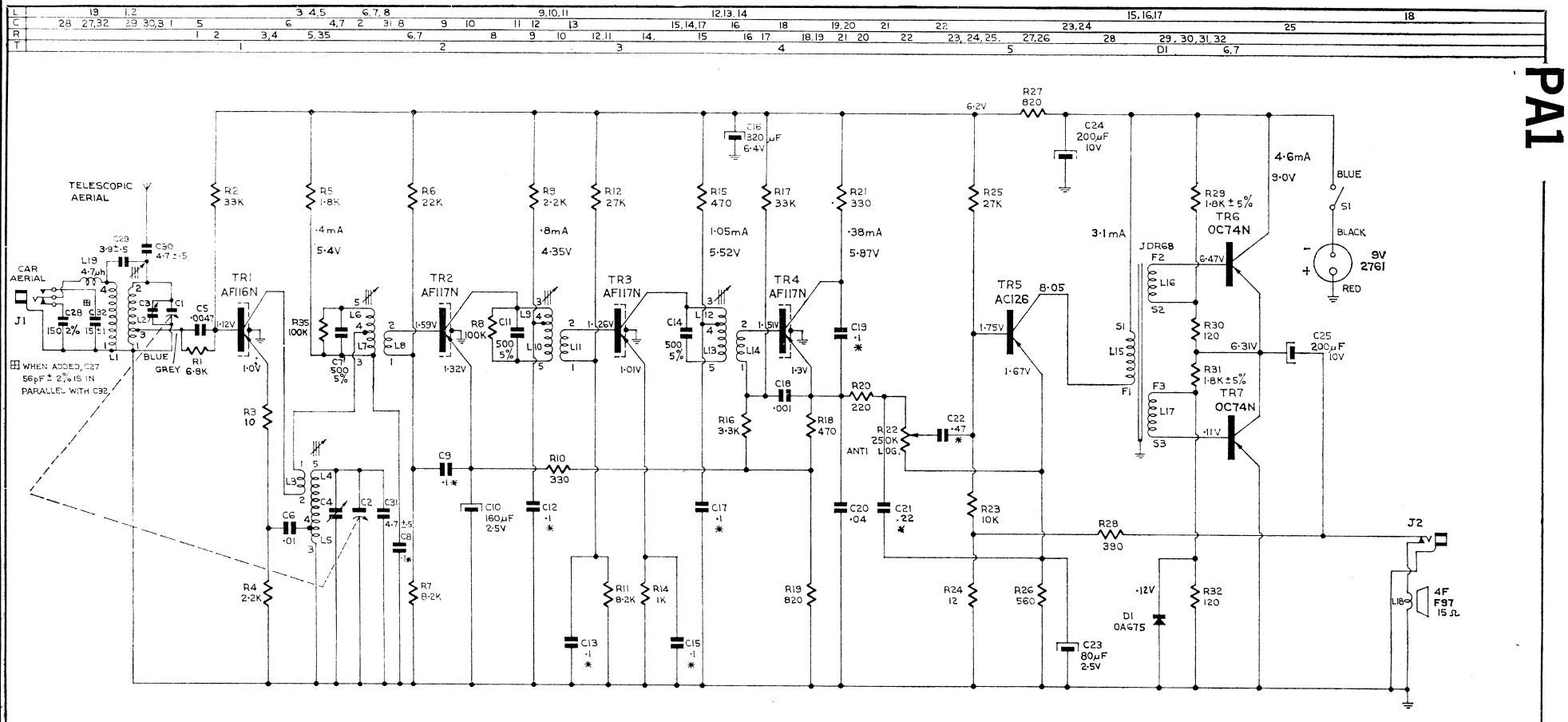

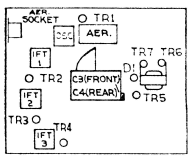

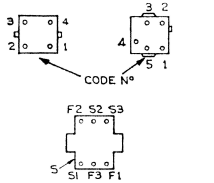

COILS AND TRANSFORMERS VIEWED FROM PIN END.

NOTES

CAPACITOR VALUES

⊞ C27 IS USED ONLY WITH LOW CAPACITY LEAD IN
WHOLE NOS. pF
DECIMALS μF
SECOND FIGURE D.C.V.W.
* HI-K CERAMIC TOL: + 80% - 20% 25V
ELECTROLYTICS TOL: + 50% - 10%
REST ± 20% UNLESS OTHERWISE SHOWN

RESISTORS

10% ½ W UNLESS OTHERWISE SHOWN

VOLTAGES

MEASURED WITH V.T.V.M.

TRANSISTOR CONNECTIONS

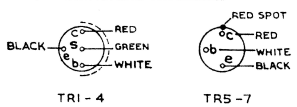

TR1 - 4 TR5 - 7

PA1

MISCELLANEOUS COMPONENTS

DESCRIPTION	TYPE OR CODE No.
Aerial—telescopic	CR.109.041
Badge—Philips	CS.436.534
Case back assembly (back and wedges)	
Maroon	CR.570.788
Grey	CR.570.789
Cursor assembly	CR.480.687
Dial cord, 29″ or 32¼″ (see drawing below) bulk	965/JB1
Dial drum assembly (see dial cord layout drawing)	CR.382.210
Dial scale—SA/WA	CS.412.474
Dial scale—TAS./N.S.W.	CS.412.475
Dial scale—QLD./VIC.	CS.412.476
Escutcheon—front	CS.430.154
Escutcheon—top	CS.430.153

DESCRIPTION	TYPE OR CODE No.
Handle—carrying	CS.432.436
Knob, 2x	CR.523.573
Pin—handle pivot, 2x	CS.351.805
Plug—battery, 2 pin pol.	CZ.365.120
	C/F691-5-2
Screw—case fastening	CS.258.896
Screw—dial scale mtg., 2x	CH.496.214.OG
Screw—telescopic aerial, 3mm x 8mm	CS.261.854
Socket—aerial	CZ.369.941
Socket—ext. speaker	CZ.369.942
Spring—aerial socket	A3.647.84
Spring—carrying handle	CS.200.043
Spring—dial cord	CS.200.044
Window—dial	CS.412.481

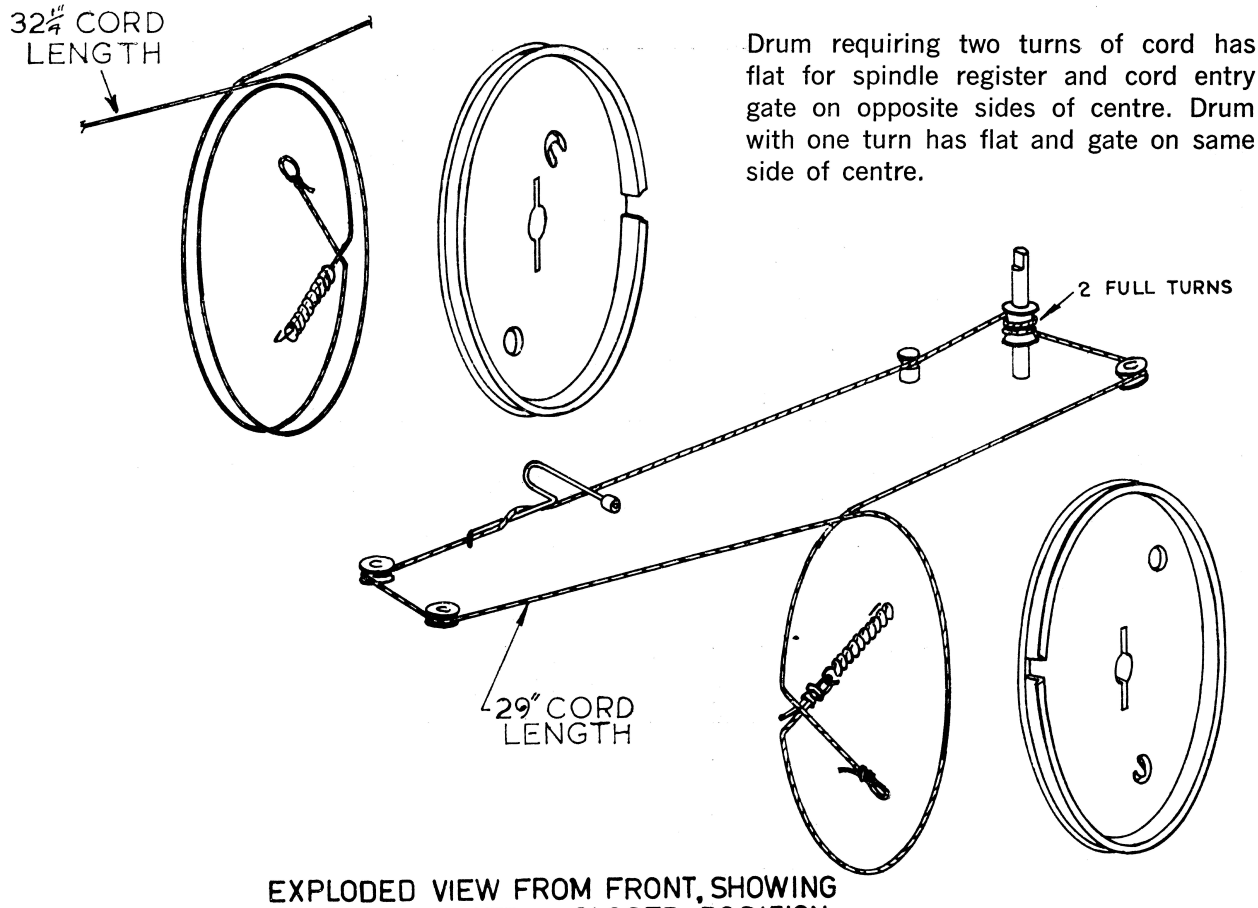

Drum requiring two turns of cord has flat for spindle register and cord entry gate on opposite sides of centre. Drum with one turn has flat and gate on same side of centre.

EXPLODED VIEW FROM FRONT, SHOWING GANG CONDENSER IN CLOSED POSITION.

Printed by SNAP-APART PTY. LTD.