SERVICE MANUAL

EIGHT - TRANSISTOR MAINS - OPERATED STEREOPHONIC GRAMOPHONE AMPLIFIER. MODEL **O3-8K**

ELEVEN - TRANSISTOR MAINS - OPERATED STEREOPHONIC PORTABLE RADIOGRAM. MODEL **T2-69**

"HIS MASTER'S VOICE"

MANUFACTURED & DISTRIBUTED BY
E.M.I. (AUSTRALIA) LIMITED
(INCORPORATED IN N.S.W.)

6 PARRAMATTA ROAD
HOMEBUSH, N.S.W.

Model O3-8K

Model T2-69

SPECIFICATION — MODEL O3-8K ("Bahama")

POWER SUPPLY:

240-250 volts, 50 c/s.

CONSUMPTION:

Amplifiers: 17 mA (no signal)

Motor: 8 watts.

SEMI-CONDUCTORS:

2 SE4010 (Silicon NPN)—Pre-Amplifiers

2 AY1108 (Silicon PNP)—Drivers

2 { AX1103 (Silicon NPN)—Output
AX1104 (Silicon PNP)—Output
Matched Pairs }

4 AB1102 Silicon Bias Stabilising Diodes

2 AS25 Silicon Power Diodes

SPEAKER IMPEDANCE:

47 ohms at 400 c/s.

DIMENSIONS:

	Unpacked	Packed
Width	18"	19¼"
Height	5½"	8"
Depth	14"	15¾"

WEIGHT:

Gross	22 lb.
Nett	18 lb.

PART No. 683-6391

May, 1966.

SERVICE MANUAL

EIGHT - TRANSISTOR MAINS - OPERATED STEREOPHONIC GRAMOPHONE AMPLIFIER. MODEL 03-8K

ELEVEN - TRANSISTOR MAINS - OPERATED STEREOPHONIC PORTABLE RADIOGRAM. MODEL T2-69

"HIS MASTER'S VOICE"

MANUFACTURED & DISTRIBUTED BY
E.M.I. (AUSTRALIA) LIMITED
(INCORPORATED IN N.S.W.)

6 PARRAMATTA ROAD
HOMEBUSH, N.S.W.

Model 03-8K

Model T2-69

SPECIFICATION — MODEL 03-8K ("Bahama")

POWER SUPPLY:

240-250 volts, 50 c/s.

CONSUMPTION:

Amplifiers: 17 mA (no signal)

Motor: 8 watts.

SEMI-CONDUCTORS:

2 SE4010 (Silicon NPN)—Pre-Amplifiers

2 AY1108 (Silicon PNP)—Drivers

2 { AX1103 (Silicon NPN)—Output
AX1104 (Silicon PNP)—Output
Matched Pairs }

4 AB1102 Silicon Bias Stabilising Diodes

2 AS25 Silicon Power Diodes

SPEAKER IMPEDANCE:

47 ohms at 400 c/s.

DIMENSIONS:

	Unpacked	Packed
Width	18"	19¼"
Height	5½"	8"
Depth	14"	15¾"

WEIGHT:

Gross	22 lb.
Nett	18 lb.

PART No. 683-6391

May, 1966.

The bias across the audio amplifier and driver transistors should not be measured, as this will give misleading results.

DISMANTLING

(1) Disconnect power plug from mains.

(2) Check that pickup is securely fastened to its rest.

(3) Remove the lead of the external speaker from its winding posts; remove the screw holding the strap to the base section and take the lid off.

(4) Remove the two screws located on each side of the motor board.

(5) Remove the front (Phillips head) screw.

(6) Grip the escutcheon firmly at each corner and lift the motor board up, tilting it backwards. Care must be taken, as the internal speaker leads are short and undue haste may cause damage.

(7) Lift the motor board until the internal speaker is readily accessible; then slide the lead terminals off the contacts on the speaker, noting the polarity.

(8) The whole assembly can now be lifted clear of the cabinet for easy access to all parts.

Note: In order to avoid possible damage to the output transistors it is advisable — if testing is to be carried out after dismantling— to connect the external speaker and substitute a 47 ohm load for the internal speaker.

Access to the underside of the printed board can be gained by first unscrewing the cooling fins and then removing the two screws holding the printed board to the chassis, after unsoldering the necessary leads.

IMPORTANT

It is desirable that, when any repairs are done to the audio amplifiers, the supply rail be reduced to half the nominal voltage to enable a quick check on the performance to be made without the possibility of damage occurring due to faulty components, etc.

This is best done by inserting a series resistor of 1000 ohms between the rectifier diodes and the supply rail before the electrolytic filter capacitor.

With the function switch to "Gram" (with Model T2), the supply rail (under no-signal conditions) for both models will be 14.5 volts; the voltage at the junction R31/32 (Vm) will be 6.0 volts.

The amplifiers will continue to operate, but at reduced power and with non-symmetrical clipping of the output stage due to the shift in centre voltage Vm. If the amplifiers do not operate, do not restore the full supply rail voltage until the fault has been rectified.

Note: It is most important that the compensating diodes, biasing the output stage, are functioning correctly.

Incorrect polarisation or failure of either diode will cause self-destruction of the transistor output pair.

A check on the voltage indicated (1.2V) and the total amplifier quiescent current will verify that these diodes are functioning correctly.

ALIGNMENT PROCEDURE, MODEL T2-69

In any case where a component replacement has been made in either IF or RF circuits of the receiver, all circuits should be realigned. IF alignment should always precede RF alignment. An output meter, having a resistance of at least 500 ohms, should be connected across the voice coil of one speaker.

In carrying out the following operations, it is important that the input to the receiver from the signal generator should be kept low and progressively reduced as the circuits are brought into line, in order that overloading shall be avoided.

Note:

(a) The tuning tool should be a small plastic screwdriver with a tip which fits cleanly into the tuning core.

(b) When tuning the core, do not use any downward pressure, as the threaded former has enough resilience to detune the circuit, after the pressure is released.

IF Alignment

(1) Set the signal generator to 455 Kc/s, with 30% modulation at 400 c/s. Turn the receiver volume control to maximum and set the tuning control to the LF end of the band.

(2) Inject the signal into the aerial section of the gang. Adjust the cores of T5, T4 and T3 in that order for maximum reading on the output meter. Start

alignment of each IF transformer by first screwing its core well out, and then screwing the core into the coil until resonance is obtained.

RF Alignment

(1) Set the controls as for IF alignment. A coil comprising 3 turns of 16-gauge DCC wire about 12" in diameter should be connected across the output terminals of the generator. The coil is placed concentric with the rod aerial at a distance of not less than one foot from it.

(2) Check that the pointer coincides with the setting line when the gang capacitor is fully enmeshed. If necessary, the pointer may be adjusted by releasing the two grub screws on the dial drum to the gang. After adjustment, the grub screws should be tightened.

(3) Set signal generator to 600 Kc/s.

(4) Turn tuning control until the pointer is exactly over the 600 Kc/s calibration mark. Adjust the core in T2 for maximum reading on the output meter.

(5) Set signal generator to 1500 Kc/s.

(6) Turn tuning control until the pointer is exactly over the 1500 Kc/s calibration mark. Adjust VC3 and VC1 in that order for maximum reading on the output meter.

(7) Repeat operations (3) to (6) for optimum alignment.

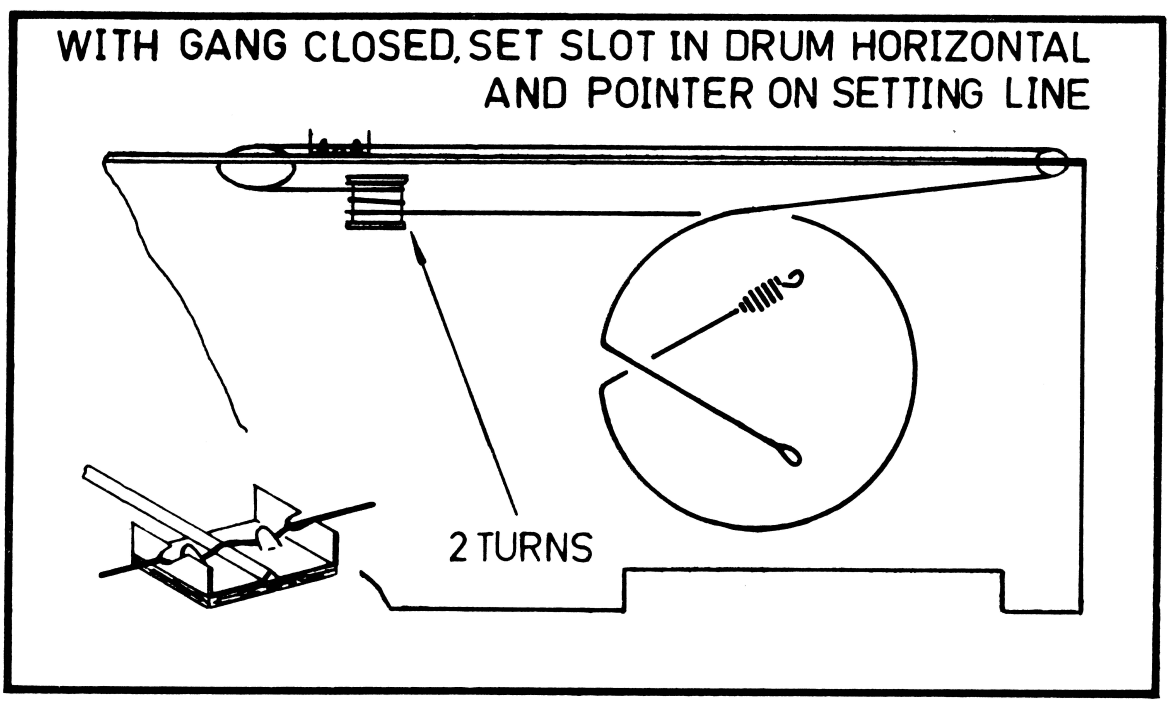

DIAL CORDING DIAGRAM.

PARTS LIST — CHASSIS TYPES O3 AND T2

Components up to R19, C17, TR3, MR2, T5 and SW1 apply to Chassis T2 only.

Ref.	Part No.	Description
		RESISTORS
R1	740-0962	10K 5% ½W
R2	740-1102	2.7K 5% ½W
R3	740-1222	68K 5% ½W
R4	740-0012	470 ohms 10% ½W
R5	740-0322	1.2K 10% ½W
R6	740-0043	2.7K 10% ½W
R7	740-1532	18K 5% ½W
R8	740-1582	150K 5% ½W
R9	740-1262	330 ohms 5% ½W
R10	740-0682	680 ohms 10% ½W
R11	740-0862	18K 10% ½W
R12	740-0072	4.7K 10% ½W
R13	740-0022	1K 10% ½W
R14	740-0412	820 ohms 10% ½W
R15	740-0102	22K 10% ½W
R16	740-0252	1.5K 10% ½W
R17	740-0072	4.7K 10% ½W
R18	740-0252	1.5K 10% ½W
R19	740-0232	39K 10% ½W
R20	740-0132	82K 10% ½W
R21	740-0142	100K 10% ½W
R22	740-1642	300K 5% ½W
R23	740-1462	120K 5% ½W
R24	740-0342	470K 5% ½W
R25	740-1462	120K 5% ½W
R26	740-0082	10K 10% ½W
R27	740-0282	220 ohms 10% ½W
R28	740-1672	20K 5% ½W
R29	740-1382	1.8K 5% ½W
R30		Link
R31	746-0252	4.7 ohms 10% WW
R32	746-0252	4.7 ohms 10% WW
R33	740-1662	270 ohms 5% ½W
R34	740-0132	82K 10% ½W
R35	740-0142	100K 10% ½W
R36	740-1642	300K 5% ½W
R37	740-1462	120K 5% ½W
R38	740-0342	470K 5% ½W
R39	740-1462	120K 5% ½W
R40	740-0082	10K 10% ½W
R41	740-0282	220 ohms 10% ½W
R42	740-1672	20K 5% ½W
R43	740-1662	270 ohms 5% ½W
R44		Link
R45	746-0252	4.7 ohms 10% WW
R46	746-0252	4.7 ohms 10% WW
R47	740-1382	1.8K 5% ½W
R48	740-0043	2.7K 10% ½W
R49	740-0921	330 ohms 10% ½W
R50	740-0921	330 ohms 10% ½W
R51	744-0043	2.7K 10% ½W
R52	740-0152	150K 10% ½W
R53	740-0152	150K 10% ½W
R54	740-0532	1M 20% ½W (Between PU terminals)

Ref.	Part No.	Description
		RESISTORS (continued)
R55	740-0532	1M 20% ½W
R56	740-0532	1M 20% ½W
R57	740-0652	100 ohms ± 10% ½W
R58	740-0652	100 ohms ± 10% ½W
		CAPACITORS
C1	271-1201	.01uF +100% —0% 50V Ceramic Disc
C2	271-1201	.01uF +100% —0% 50V Ceramic Disc
C3	280-3191	470pF 5% 125V Styroseal
C4	271-1181	.05uF +80% —20% 50V Ceramic Disc
C5	271-1181	.05uF +80% —20% 50V Ceramic Disc
C6	269-1041	10uF 6V Electro
C7	271-1181	.05uF +80% —20% 50V Ceramic Disc
C8	280-3191	470pF 5% 125V Styroseal
C9	271-1181	.05uF +80% —20% 50V Ceramic Disc
C10	271-1181	.05uF +80% —20% 50V Ceramic Disc
C11	271-1181	.05uF +80% —20% 50V Ceramic Disc
C12	280-3251	.001uF 5% 50V Styroseal
C13	271-1181	.05uF +80% —20% 50V Ceramic Disc
C14	269-1251	50 uF 25V Electro
C15	271-1271	.001uF 20% Ceramic Type AY
C16	271-1271	.001uF 20% Ceramic Type AY
C17	271-1271	.001uF 20% Ceramic Type AY
C18	271-1201	.01uF +100% —0% 50V Ceramic Disc
C19	271-1451	.33uF +80% —20% 25V Redcap
C20	271-0711	.22uF +80% —20% 25V Redcap
C21	269-1411	2.5uF 16V Electro
C22	271-1171	820pF 20% Ceramic Disc Type AY
C23		Not Used
C24	283-1661	.022uF 10% 400V Polyester
C25	269-1341	2000uF 35V Electro
C26	269-1031	80uF 15V Electro
C27	271-1201	.01uF +100 —0% 50V Ceramic Disc
C28	271-1451	.33uF +80% —20% 25V Redcap
C29	271-0711	.22uF +80% —20% 25V Redcap
C30	269-1411	2.5uF 16V Electro
C31	271-1171	820pF 20% Ceramic Disc Type AY
C32	283-1661	.022uF 10% 400V Polyester

PARTS LIST — CHASSIS TYPES O3 & T2 (continued)

Components up to R19, C17, TR3, MR2, T5 and SW1 apply to Chassis T2 only.

Ref.	Part No.	Description
		CAPACITORS (continued)
C33	283-1261	.15uF 10% 160V Polyester
C34	269-1031	80uF 15V Electro
C35	283-1521	1500pF 10% 400V Polyester
C36	283-1521	1500pF 10% 400V Polyester
C37	271-0801	.0047uF 20% 25V Redcap
C38	271-0801	.0047uF 20% 25V Redcap
		POTENTIOMETERS
RV1, RV2	677-1461	2 x 2M tapped 900K Curve 'B' with DPST switch (SW2)
RV3	677-1402	500 ohms Curve 'A'
RV4, RV5	677-1392	2 x 50K Curve 'C'
RV6, RV7	677-1293	2 x 2M tapped 900K Curve 'B'
		SEMI-CONDUCTORS
TR1	932-2281	SE1001—Converter
TR2	932-2281	SE1001—1st IF Amplifier
TR3	932-2281	SE1001—2nd IF Amplifier
TR4	932-2731	SE4010—Audio Amplifier
TR5	932-2691	AY1108—Audio Driver
TR6, TR7	932-2531	AX1103—Audio Output AX1104—Audio Output Matched Pair
TR8	932-2731	SE4010—Audio Amplifier
TR9	932-2691	AY1108—Audio Driver
TR10, TR11	932-2531	AX1103—Audio Output AX1104—Audio Output Matched Pair
MR1	932-0971	OA90—Auxiliary AGC
MR2	932-0971	OA90—Detector and AGC
MR3	932-2541	AB1102—Bias Stabilising Diode
MR4	932-2541	AB1102—Bias Stabilising Diode
MR5	932-2541	AB1102—Bias Stabilising Diode
MR6	932-2541	AB1102—Bias Stabilising Diode
MR7	932-2261	AS25—Power Diode
MR8	932-2261	AS25—Power Diode
		TRANSFORMERS
T1	253-0351	Aerial Rod Assembly
T2	257-0226	Oscillator Coil
T3	906-0761	1st IF Transformer
T4	906-0761	2nd IF Transformer
T5	906-0751	3rd IF Transformer
T6	904-0531	Mains Transformer
		MISCELLANEOUS
VC1, VC2, VC3, VC4	281-0332	2-Gang Capacitor with trimmers
SW1	855-0771	Oak 3-Pole 2-Position Switch

Ref.	Part No.	Description
		MISCELLANEOUS (continued)
	558-1521	B.S.R. Record Changer, type UA50 with C1 type ceramic stereo cartridge and ST3 stylus
LS1, LS3	831-2461	Loudspeaker, E.M.I. 7" x 4" PG, 47 ohms, V.C.
LS2, LS4	831-2491	Loudspeaker, E.M.I. 7" x 4" PO, 47 ohms V.C.
		SPARE PARTS
	189-1781	Cabinet, Charcoal
	189-1791	Cabinet, Tan
	189-1801	Cabinet, Red (O3-8K only)
	470-0231	Handle
	517-2461	Knob, Record Storage
	517-2591	Knob, Control
	561-1301	Medallion, Trade-mark
	211-0411	Cartridge, type C1
	611-0551	Stylus, B.S.R. type ST3
	794-1811	Dial Scale (T2-69 only)
	297-0011	Dial Cord (T2-69 only)
	932-1171	Lamp, 6.3V .32A B/C (T2-69 only).

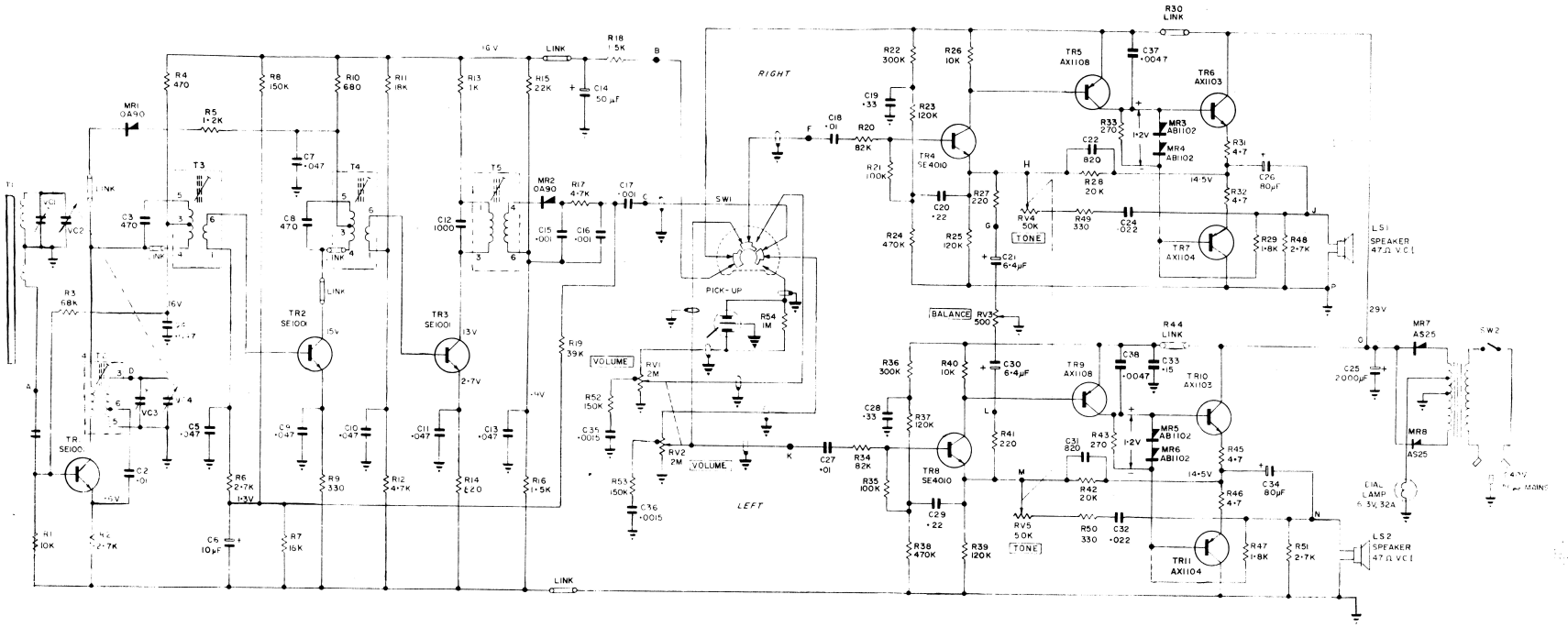

CORRECTIONS TO CIRCUIT DIAGRAM

Changes: C21 and C30 changed to 2.5 mfd. C22 and C31 wired across connected terminals of tone control.
Additions: 100 ohm resistor in series with C37 and C38. 1 megohm resistor from wiper of each volume control element to earth.

CIRCUIT DIAGRAM — MODEL T2-69

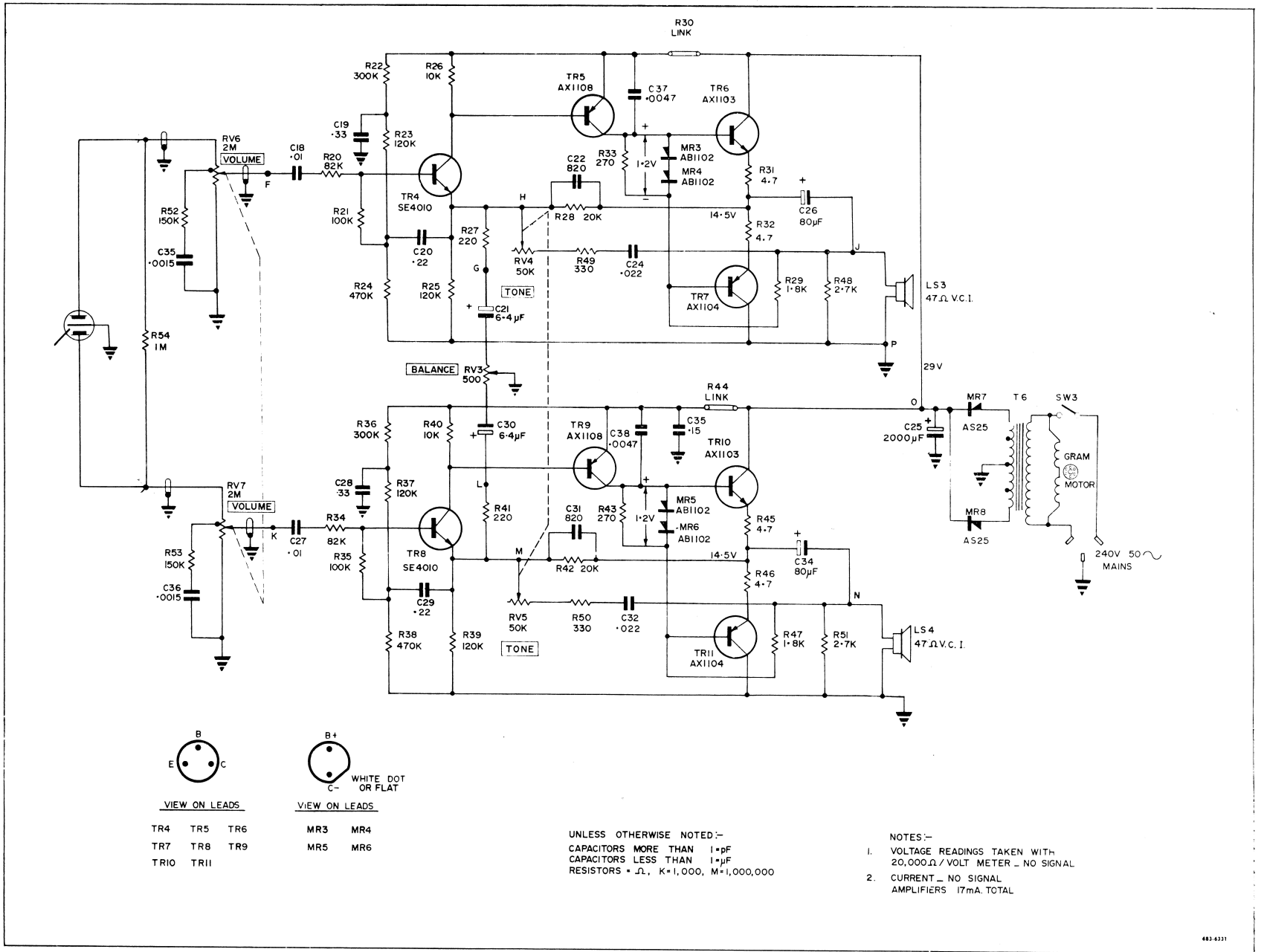

CORRECTIONS TO CIRCUIT DIAGRAM

Changes: C21 & C30 changed to 2.5 mfd. C22 & C31 wired across connected terminals of tone control. For C35 (.15 160V Polyester) read C33 (.15 160V Polyester).
Additions: 100 ohm resistor in series with C37 and C38. 1 megohm resistor from wiper of each volume control element to earth.

CIRCUIT DIAGRAM — MODEL 03-8K

H. CLARK PTY. LTD.
Printers
MARRICKVILLE, N.S.W.